© – TE Connectivity. All Rights Reserved.

REVISIONS					
P	LTR	DESCRIPTION	DATE	DWN	APVD
	D4	REVISED PER ECR-25-255998	15SEP2025	SA	DSC

AMP WIRE RANGE	Listed FILE E13288	LR7189 Certified
12-10 AWG SOLID OR STRANDED	12-10 AWG SOLID OR STRANDED	12-10 AWG SOLID OR STRANDED

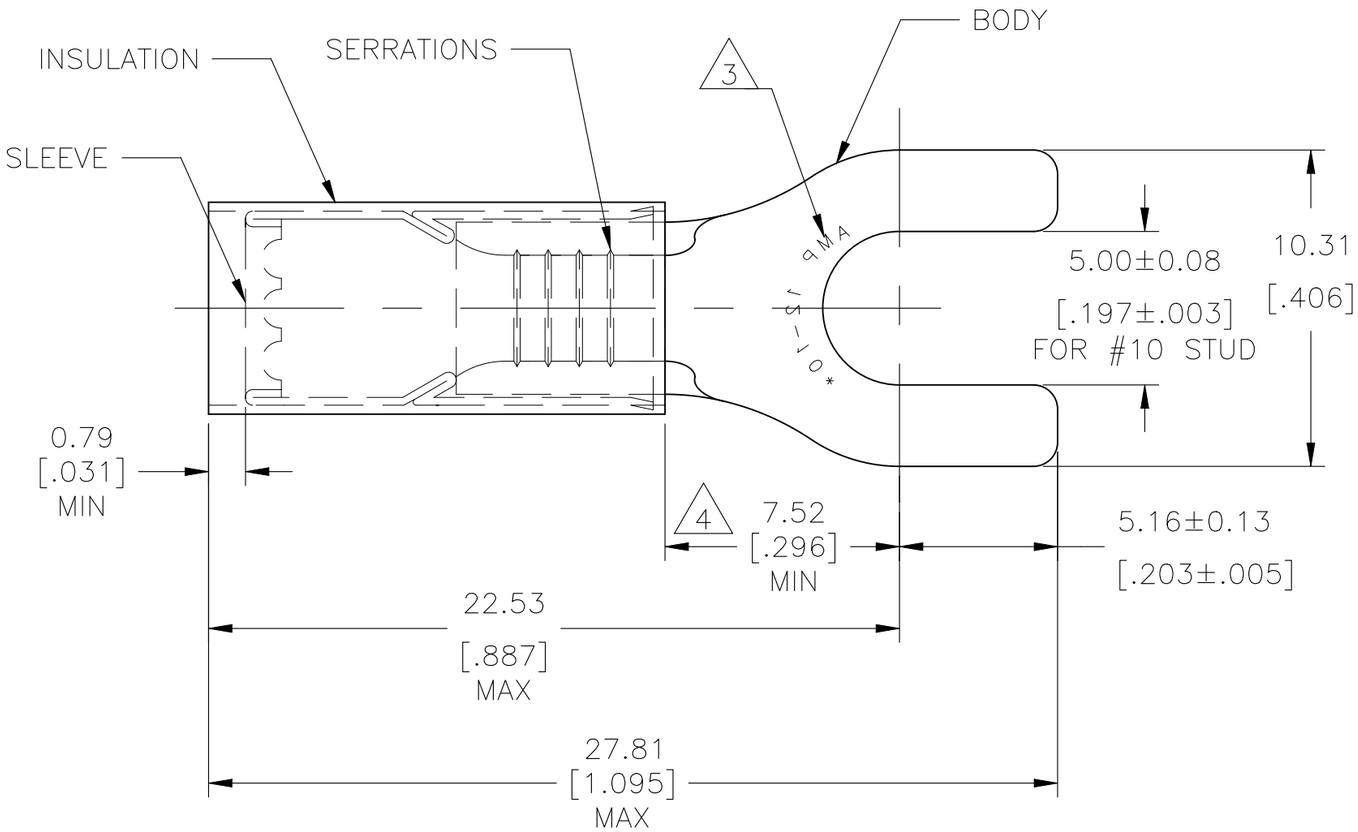

1 TONGUE MATERIAL THK: 1.02±0.05[.040±.002]

2 FOR WIRE INSULATION DIA: 3.81[.150] TO 5.84[.230]

3 STAMP AMP 12-10* APPROX AS SHOWN

4 DIMENSION APPLIES FROM EDGE OF METAL WIRE BARREL TO CENTER OF STUD.

5 MATERIAL:
BODY&SLEEVE: COPPER PER ASTM B152
INSULATION: NYLON.

6 FINISH:
BODY&SLEEVE: TIN PLATE PER ASTM B545
INSULATION: COLOR-YELLOW

QTY	PACKAGE TYPE	PART NO
50	LOOSE PC, BOX	8-32589-2
1 KIT = 100 PIECES	LOOSE PIECE	6-32589-0
2500	ON TAPE REEL	2-32589-1
500	LOOSE PIECE	32589

AMP INCORPORATED
CUSTOMER SERVICE SYSTEMS

FOR ADDITIONAL PRODUCT INFORMATION OR COPIES OF DRAWINGS AND TECHNICAL DOCUMENTS	PRODUCT INFORMATION CENTER 1-800-522-6752	RECOMMENDED OPERATING TEMPERATURE: 105°C [221°F]
FOR APPLICATION TOOLING INFORMATION	TOOLING ASSISTANCE CENTER 1-800-722-1111	VOLTAGE RATING: 300V MAX
FOR ORDER ENTRY	1-800-526-5142	WIRE CROSS SECTIONAL AREA RANGE: 2.62-6.64mm² [5,180-13,100] SOLID OR STRANDED

THIS DRAWING IS A CONTROLLED DOCUMENT.

DIMENSIONS: mm [INCHES]

TOLERANCES UNLESS OTHERWISE SPECIFIED:
0 PLC ± –
1 PLC ± –
2 PLC ± 0.20[.008]
3 PLC ± –
4 PLC ± –
ANGLES ± 5°

MATERIAL 5

FINISH 6

DWN	KIRAN HOLAL	02APR12
CHK	ROHDE DANIEL	02APR12
APVD	ROHDE DANIEL	02APR12
PRODUCT SPEC	—	
APPLICATION SPEC	—	
WEIGHT	—	

TE Connectivity

NAME: WIRE TERMINAL, P.I.D.G SPADE, WIRE SIZE: 12-10

SIZE	CAGE CODE	DRAWING NO	RESTRICTED TO
A3	00779	C-32589	—

CUSTOMER DRAWING | SCALE 5:1 | SHEET 1 OF 1 | REV D4

1470-19 (1/15)