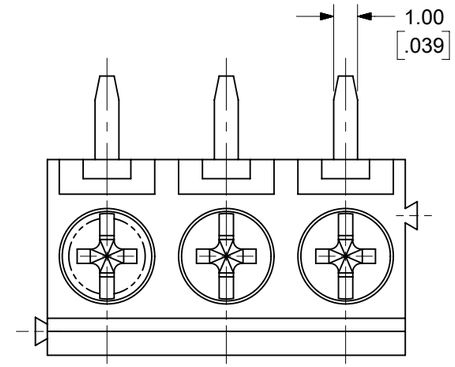

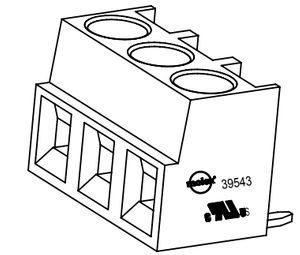

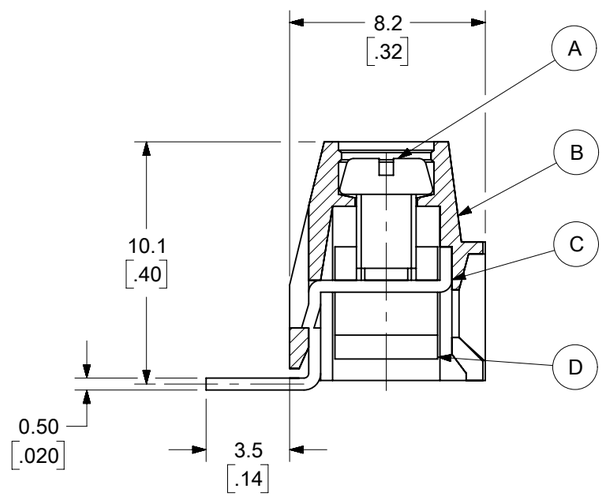

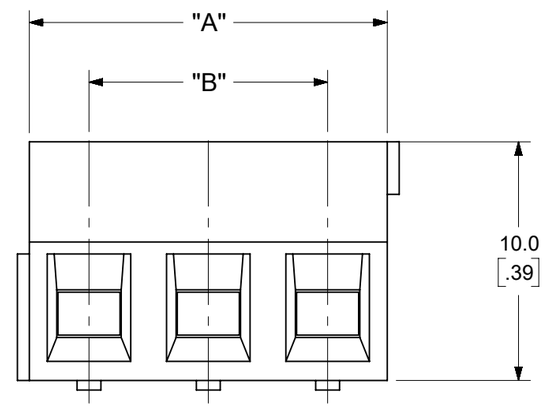

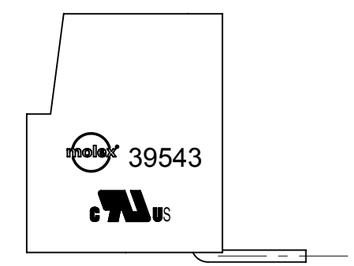

SPECIFICATIONS:

1. MATERIAL:
   (A). SCREW: C1010
   (B). BODY: PA66
   (C). TERMINAL: BRASS
   (D). CAGE: BRASS
2. WIRE RANGE: 24 - 16AWG
3. ELECTRICAL RATING: 300V, 10A.
4. MAX TORQUE: 3.5 IN-LBS.
5. WIRE STRIP LENGTH: 5.5mm.
6. DIELECTRIC WITHSTAND: AC 2500V FOR 1 MINUTE.
7. BREAKDOWN VOLTAGE : 4000V.(1.2/50us). 5 TIMES
8. INSULATION RESISTANCE: DC 500V, 1000M.
9. OPERATING TEMPERATURE: -40°C to +105°C.
10. A = N x P
11. B = (N - 1) x P
12. P (PITCH) = 5.00mm (.197").
13. N = NUMBER OF POSITIONS AVAILABLE 2 THROUGH 24.

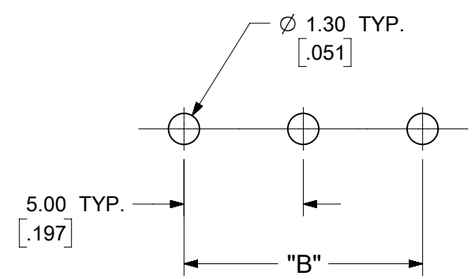

PCB LAYOUT

TOLERANCES			
MM	TOL	INCH	TOL
0-6	±0.25	0-.24	±.010
>6-30	±0.40	.24-1.18	±.016
>30-120	±0.50	1.18-4.76	±.020
>120	±0.80	>4.76	±.031

SYMBOLS: E = 0; E = 0; E = 0; S = 0; ▼ = 0; V = 0; ☒ = 0; ■ = 0; V = 0

THIS DRAWING CONTAINS INFORMATION THAT IS PROPRIETARY TO MOLEX ELECTRONIC TECHNOLOGIES, LLC AND SHOULD NOT BE USED WITHOUT WRITTEN PERMISSION

DIMENSION UNITS	SCALE
MM/INCH	4:1

GENERAL TOLERANCES (UNLESS SPECIFIED)

	MM	INCH
4 PLACES	±	±
3 PLACES	±	± SEE CHART
2 PLACES	± SEE CHART	± SEE CHART
1 PLACE	± SEE CHART	±
0 PLACES	±	±
ANGULAR TOL	± °	

DRAFT WHERE APPLICABLE MUST REMAIN WITHIN DIMENSIONS

CURRENT REV DESC: MIGRATION TO ECTR/NX

EC NO: 619931
DRWN: DSOPPIN 2019/06/24
CHK'D: DACHAMMER 2019/07/01
APPR: JFMURPHY 2019/07/08

INITIAL REVISION:
DRWN: LROTHAUS 2005/006/12
APPR: C.YORK 2006/06/01

THIRD ANGLE PROJECTION | DRAWING: B-SIZE | SERIES: 39543

molex

5.0MM, EURO TERM BLOCK
RIGHT ANGLE, PC MOUNT STACKABLE, STAMPED TERM

PRODUCT CUSTOMER DRAWING

DOCUMENT NUMBER	DOC TYPE	DOC PART	REVISION
SD-39543-006	PSD	001	A2

MATERIAL NUMBER	CUSTOMER	SHEET NUMBER
SEE SHEET 2	GENERAL MARKET	1 OF 2

DOCUMENT STATUS	P1	RELEASE DATE	2019/07/08 15:51:15

FORMAT: Eng-legacy-prod-prod-B
REVISION: D
DATE: 2018/01/18

DESCRIPTION	CIRCUIT SIZE	MATERIAL NUMBERS MOLDED TO LENGTH						MATERIAL NUMBERS STACKABLE						DIMENSIONAL INFORMATION			
		BLACK			GREEN			BLACK			GREEN						
		100% TIN			100% TIN			100% TIN			100% TIN						
		PRINTING OPTIONS			PRINTING OPTIONS			PRINTING OPTIONS			PRINTING OPTIONS			DIM. "A"		DIM. "B"	
		None	10AV	11AV	None	10AV	11AV	None	10AV	11AV	None	10AV	11AV	mm	inch	mm	inch
5.0 MM, EURO BLOCK, PC MOUNT, RIGHT ANGLE	2	395433102	395435102	395437102	395933102	395935102	395937102	395434502	395436502	395438502	395934502	395936502	395938502	10.00	.394	5.00	.197
5.0 MM, EURO BLOCK, PC MOUNT, RIGHT ANGLE	3	395433103	395435103	395437103	395933103	395935103	395937103	395434503	395436503	395438503	395934503	395936503	395938503	15.00	.591	10.00	.394
5.0 MM, EURO BLOCK, PC MOUNT, RIGHT ANGLE	4	395433104	395435104	395437104	395933104	395935104	395937104	N/A	N/A	N/A	N/A	N/A	N/A	20.00	.787	15.00	.591
5.0 MM, EURO BLOCK, PC MOUNT, RIGHT ANGLE	5	395433105	395435105	395437105	395933105	395935105	395937105	N/A	N/A	N/A	N/A	N/A	N/A	25.00	.984	20.00	.787
5.0 MM, EURO BLOCK, PC MOUNT, RIGHT ANGLE	6	395433106	395435106	395437106	395933106	395935106	395937106	N/A	N/A	N/A	N/A	N/A	N/A	30.00	1.181	25.00	.984
5.0 MM, EURO BLOCK, PC MOUNT, RIGHT ANGLE	7	395433107	395435107	395437107	395933107	395935107	395937107	N/A	N/A	N/A	N/A	N/A	N/A	35.00	1.378	30.00	1.181
5.0 MM, EURO BLOCK, PC MOUNT, RIGHT ANGLE	8	395433108	395435108	395437108	395933108	395935108	395937108	N/A	N/A	N/A	N/A	N/A	N/A	40.00	1.575	35.00	1.378
5.0 MM, EURO BLOCK, PC MOUNT, RIGHT ANGLE	9	395433109	395435109	395437109	395933109	395935109	395937109	N/A	N/A	N/A	N/A	N/A	N/A	45.00	1.772	40.00	1.575
5.0 MM, EURO BLOCK, PC MOUNT, RIGHT ANGLE	10	395433110	395435110	395437110	395933110	395935110	395937110	N/A	N/A	N/A	N/A	N/A	N/A	50.00	1.969	45.00	1.772
5.0 MM, EURO BLOCK, PC MOUNT, RIGHT ANGLE	11	395433111	395435111	395437111	395933111	395935111	395937111	N/A	N/A	N/A	N/A	N/A	N/A	55.00	2.165	50.00	1.969
5.0 MM, EURO BLOCK, PC MOUNT, RIGHT ANGLE	12	395433112	395435112	395437112	395933112	395935112	395937112	N/A	N/A	N/A	N/A	N/A	N/A	60.00	2.362	55.00	2.165
5.0 MM, EURO BLOCK, PC MOUNT, RIGHT ANGLE	13	395433113	395435113	395437113	395933113	395935113	395937113	N/A	N/A	N/A	N/A	N/A	N/A	65.00	2.559	60.00	2.362
5.0 MM, EURO BLOCK, PC MOUNT, RIGHT ANGLE	14	395433114	395435114	395437114	395933114	395935114	395937114	N/A	N/A	N/A	N/A	N/A	N/A	70.00	2.756	65.00	2.559
5.0 MM, EURO BLOCK, PC MOUNT, RIGHT ANGLE	15	395433115	395435115	395437115	395933115	395935115	395937115	N/A	N/A	N/A	N/A	N/A	N/A	75.00	2.953	70.00	2.756
5.0 MM, EURO BLOCK, PC MOUNT, RIGHT ANGLE	16	395433116	395435116	395437116	395933116	395935116	395937116	N/A	N/A	N/A	N/A	N/A	N/A	80.00	3.150	75.00	2.953
5.0 MM, EURO BLOCK, PC MOUNT, RIGHT ANGLE	17	395433117	395435117	395437117	395933117	395935117	395937117	N/A	N/A	N/A	N/A	N/A	N/A	85.00	3.346	80.00	3.150
5.0 MM, EURO BLOCK, PC MOUNT, RIGHT ANGLE	18	395433118	395435118	395437118	395933118	395935118	395937118	N/A	N/A	N/A	N/A	N/A	N/A	90.00	3.543	85.00	3.346
5.0 MM, EURO BLOCK, PC MOUNT, RIGHT ANGLE	19	395433119	395435119	395437119	395933119	395935119	395937119	N/A	N/A	N/A	N/A	N/A	N/A	95.00	3.740	90.00	3.543
5.0 MM, EURO BLOCK, PC MOUNT, RIGHT ANGLE	20	395433120	395435120	395437120	395933120	395935120	395937120	N/A	N/A	N/A	N/A	N/A	N/A	100.00	3.937	95.00	3.740
5.0 MM, EURO BLOCK, PC MOUNT, RIGHT ANGLE	21	395433121	395435121	395437121	395933121	395935121	395937121	N/A	N/A	N/A	N/A	N/A	N/A	105.00	4.134	100.00	3.937
5.0 MM, EURO BLOCK, PC MOUNT, RIGHT ANGLE	22	395433122	395435122	395437122	395933122	395935122	395937122	N/A	N/A	N/A	N/A	N/A	N/A	110.00	4.331	105.00	4.134
5.0 MM, EURO BLOCK, PC MOUNT, RIGHT ANGLE	23	395433123	395435123	395437123	395933123	395935123	395937123	N/A	N/A	N/A	N/A	N/A	N/A	115.00	4.528	110.00	4.331
5.0 MM, EURO BLOCK, PC MOUNT, RIGHT ANGLE	24	395433124	395435124	395437124	395933124	395935124	395937124	N/A	N/A	N/A	N/A	N/A	N/A	120.00	4.724	115.00	4.528

TOLERANCES			
MM	TOL	INCH	TOL
0-6	±0.25	0-.24	±.010
>6-30	±0.40	.24-1.18	±.016
>30-120	±0.50	1.18-4.76	±.020
>120	±0.80	>4.76	±.031

SYMBOLS
F = 0
C = 0
P = 0
S = 0
▼ = 0
▽ = 0
☒ = 0
■ = 0
▽ = 0

THIS DRAWING CONTAINS INFORMATION THAT IS PROPRIETARY TO MOLEX ELECTRONIC TECHNOLOGIES, LLC AND SHOULD NOT BE USED WITHOUT WRITTEN PERMISSION

DIMENSION UNITS: MM/INCH
SCALE: 2:1

GENERAL TOLERANCES (UNLESS SPECIFIED)

	MM	INCH
4 PLACES	±	±
3 PLACES	±	± SEE CHART
2 PLACES	± SEE CHART	± SEE CHART
1 PLACE	± SEE CHART	±
0 PLACES	±	±
ANGULAR TOL	± °	

DRAFT WHERE APPLICABLE MUST REMAIN WITHIN DIMENSIONS

CURRENT REV DESC: MIGRATION TO ECTR/NX

EC NO: 619931
DRWN: DSOPPIN 2019/06/24
CHK'D: DACHAMMER 2019/07/01
APPR: JFMURPHY 2019/07/08

INITIAL REVISION:
DRWN: LROTHAUS 2005/06/12
APPR: C.YORK 2006/06/01

THIRD ANGLE PROJECTION | DRAWING: B-SIZE | SERIES: 39543

molex

5.0MM, EURO TERM BLOCK
RIGHT ANGLE, PC MOUNT STACKABLE, STAMPED TERM

PRODUCT CUSTOMER DRAWING

DOCUMENT NUMBER	DOC TYPE	DOC PART	REVISION
SD-39543-006	PSD	001	A2

MATERIAL NUMBER	CUSTOMER	SHEET NUMBER
SEE TABLE	GENERAL MARKET	2 OF 2

DOCUMENT STATUS	P1	RELEASE DATE	2019/07/08 15:51:15

FORMAT: Eng-legacy-portrait-prod-B
REVISION: D
DATE: 2018/01/18