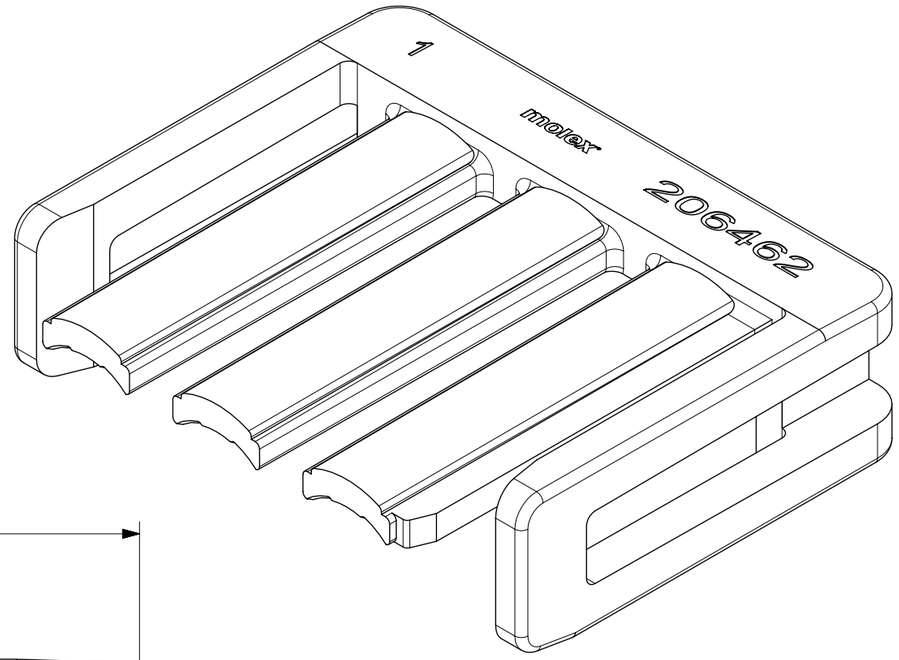

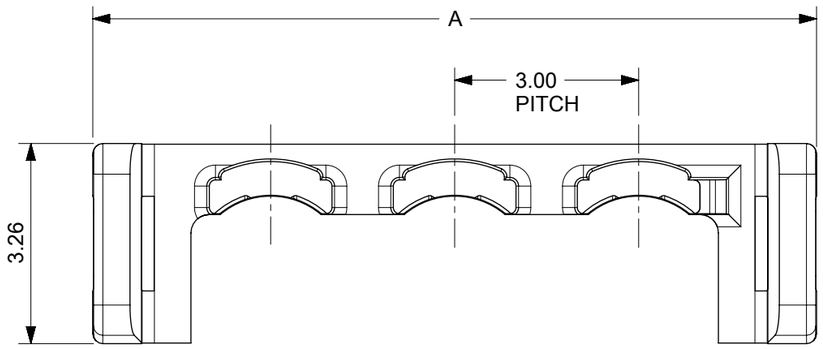

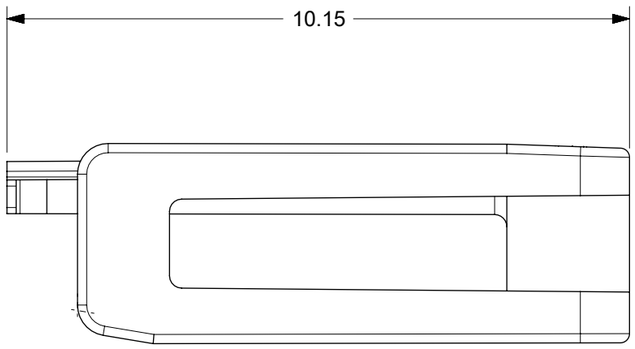

PART NO.		CKT	A
MATERIAL "0"	MATERIAL "1"		
2064620100	2064620110	1	5.80
2064620200	2064620210	2	8.80
2064620300	2064620310	3	11.80
2064620400	2064620410	4	14.80
2064620500	2064620510	5	17.80
2064620600	2064620610	6	20.80
2064620700	2064620710	7	23.80
2064620800	2064620810	8	26.80
2064620900	2064620910	9	29.80
2064621000	2064621010	10	32.80
2064621100	2064621110	11	35.80
2064621200	2064621210	12	38.80

NOTES:
1. MATERIAL:
   "0":NYLON, UL 94V-0, GLOW-WIRE CAPAPLE, COLOR: NATURAL
   "1":NYLON, UL 94V-0, LOW HALOGEN, COLOR: NATURAL
2. THESE PARTS ARE USED WITH 206461 HOUSING SERIES
3. SHALL CONFIRM TO PRODUCT SPECIFICATION : 2064600000-PS
4. COMPLY WITH PACKAGING SPECIFICATION : 2064620000-PK
5. COSMETIC SPECIFICATION: PS-45499-002 CLASS B

THIS DRAWING CONTAINS INFORMATION THAT IS PROPRIETARY TO MOLEX ELECTRONIC TECHNOLOGIES, LLC AND SHOULD NOT BE USED WITHOUT WRITTEN PERMISSION

DIMENSION UNITS	SCALE
mm	NTS

GENERAL TOLERANCES (UNLESS SPECIFIED)

ANGULAR TOL	±	0.5 °
4 PLACES	±	
3 PLACES	±	
2 PLACES	±	0.25
1 PLACE	±	0.35
0 PLACES	±	

DRAFT WHERE APPLICABLE MUST REMAIN WITHIN DIMENSIONS

CURRENT REV DESC:

EC NO: 807260
DRWN: ZIXUAQ 2024/01/12
CHK'D: XQZHANG 2024/12/18
APPR: XQZHANG 2024/12/18

INITIAL REVISION:
DRWN: SMAHAJANSHET 2018/05/08
APPR: NCSR 2019/04/02

molex

TPA
MICRO-FIT + SOLUTION

PRODUCT CUSTOMER DRAWING

DOCUMENT NUMBER	DOC TYPE	DOC PART	REVISION
2064620000-SD	PSD	000	B1

THIRD ANGLE PROJECTION	DRAWING	SERIES	MATERIAL NUMBER	CUSTOMER	SHEET NUMBER
	A3-SIZE	206462	SEE TABLE	GENERAL MARKET	1 OF 1

DOCUMENT STATUS	P1	RELEASE DATE	2024/12/18 06:42:30

FORMAT: master-tb-prod-A3
REVISION: J1
DATE: 2021/05/01