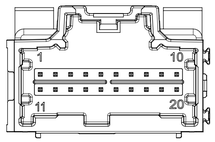

POLARIZATION OPTION A
P/N 346900200

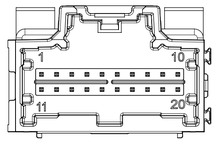

POLARIZATION OPTION B
P/N 346900201

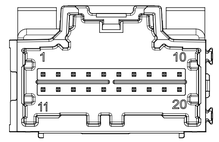

POLARIZATION OPTION C
P/N 346900202

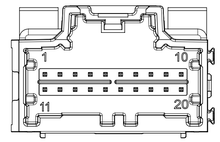

POLARIZATION OPTION D
P/N 346900203

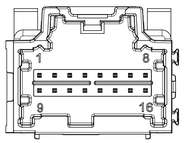

POLARIZATION OPTION A
P/N 346900160

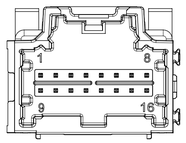

POLARIZATION OPTION B
P/N 346900161

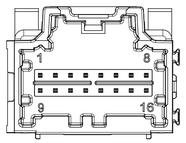

POLARIZATION OPTION C
P/N 346900162

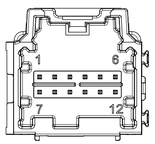

POLARIZATION OPTION A
P/N 346900120

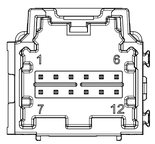

POLARIZATION OPTION B
P/N 346900121

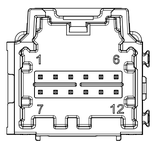

POLARIZATION OPTION C
P/N 346900122

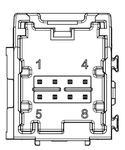

POLARIZATION OPTION A
P/N 346900080

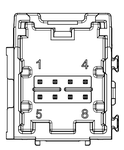

POLARIZATION OPTION B
P/N 346900081

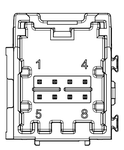

POLARIZATION OPTION C
P/N 346900082

MATERIAL NUMBER			CKT SIZE	DESCRIPTION	POL	COLOR
TRAY PACKAGING PK-31300-892	TUBE PACKAGING PK-31301-063	CELL TRAY PACKAGING 346909100				
346900200	346909200		20	STAC64 VERTICAL HEADER ASSEMBLY	A	BLACK
346900201	346909201		20	STAC64 VERTICAL HEADER ASSEMBLY	B	GREY
346900202	346909202		20	STAC64 VERTICAL HEADER ASSEMBLY	C	BROWN
346900203	346909203		20	STAC64 VERTICAL HEADER ASSEMBLY	D	GREEN
346900160	346909160	346908160	16	STAC64 VERTICAL HEADER ASSEMBLY	A	BLACK
346900161	346909161		16	STAC64 VERTICAL HEADER ASSEMBLY	B	GREY
346900162	346909162		16	STAC64 VERTICAL HEADER ASSEMBLY	C	BROWN
346900120	346909120		12	STAC64 VERTICAL HEADER ASSEMBLY	A	BLACK
346900121	346909121		12	STAC64 VERTICAL HEADER ASSEMBLY	B	GREY
346900122	346909122		12	STAC64 VERTICAL HEADER ASSEMBLY	C	BROWN
346900080	346909080		8	STAC64 VERTICAL HEADER ASSEMBLY	A	BLACK
346900081	346909081		8	STAC64 VERTICAL HEADER ASSEMBLY	B	GREY
346900082	346909082		8	STAC64 VERTICAL HEADER ASSEMBLY	C	BROWN
346903084	N/A		8	STAC64 DELETE CAP	A	BLACK

NOTES: VALID UNLESS OTHERWISE SPECIFIED

1. GENERAL:
a. CONNECTOR HEADER MUST BE VALIDATED TO THE FOLLOWING FUNCTIONAL REQUIREMENTS:
POLARIZATION FEATURE EFFECTIVENESS = SEE PRODUCT SPECIFICATION
PIN RETENTION = USCAR-2 REV 4
SOLDERABILITY = SMES-152
b. APPLICATION REQUIREMENTS (REFERENCE ONLY) FOR:
SEE APPLICATION SPECIFICATION = AS-34729-020/AS-31408-100
SEE PRODUCT SPECIFICATION = PS-34729-020/PS-31408-100
c. PACKAGING SPECIFICATION: SEE CHART
2. DESIGN: MATERIALS:
a. SHROUD (PLASTIC HOUSING):
RESIN - SPS 30%GF - 20% REGRIND MAX. BY WEIGHT
b. 0.64MM PINS:
BASE MATERIAL: C26000
PLATING TYPE: AS NOTED
3. PLATING REQUIREMENTS:
a. UNDERPLATING - OVERALL NICKEL
b. OVERPLATING - OVERALL TIN

4. INTERFACE: USCAR
064-U-008-2-Z02
064-U-012-2-Z03
064-U-016-2-Z03
064-U-020-2-Z02
SOME CHAMFERS HAVE BEEN MODIFIED TO IMRPROVE POLARIZATION EFFECTIVENESS. SEE AS-34729-002/AS-31408-100.

REV.	REV DESCRIPTION	EC#	DATE	NAME
A4	CORRECTED DRAWING TYPE FROM RESTRICTED CUSTOMER TO GENERAL MARKET	637858	2020.05	YPENG47

INSPECTION BALLOON NUMBER LOG
PER DRAWING REVISION: A4
LAST BALLOON NUMBER: 10
ADDED BALLOON NUMBER: NONE
DELETED BALLOON NUMBER: NONE

FUNCTIONAL SYMBOLS: FA = 0, FC = 0, FE = 0
DIVISIONAL SYMBOLS

THIS DRAWING CONTAINS INFORMATION THAT IS PROPRIETARY TO MOLEX ELECTRONIC TECHNOLOGIES, LLC AND SHOULD NOT BE USED WITHOUT WRITTEN PERMISSION

DIMENSION UNITS: mm
SCALE: 2:1
GENERAL TOLERANCES (UNLESS SPECIFIED)
ANGULAR TOL ± 3.0 °
4 PLACES ±
3 PLACES ±
2 PLACES ± 0.13
1 PLACE ± 0.25
0 PLACES ±
DRAFT WHERE APPLICABLE MUST REMAIN WITHIN DIMENSIONS

CURRENT REV DESC: SEE REVISION SHEET
EC NO: 637858
DRWN: YPENG47 2020/05/19
CHK'D: CDZHANG 2020/10/22
APPR: CDZHANG 2020/10/22
INITIAL REVISION:
DRWN: AKUMARMS 2015/12/01
APPR: RBAUMAN 2016/08/23

molex

STAC64 SINGLE BAY
VERTICAL ASSEMBLY SALES DRAWING

PRODUCT CUSTOMER DRAWING

DOCUMENT NUMBER	DOC TYPE	DOC PART	REVISION
346900000	PSD	000	A4

THIRD ANGLE PROJECTION | DRAWING: D-SIZE | SERIES: 34690 | MATERIAL NUMBER: SEE CHART | CUSTOMER | SHEET NUMBER: 1 OF 2

THIS DRAWING IS REDRAWING OF SD-34690-100 REV. H6

DOCUMENT STATUS	P1	RELEASE DATE	2020/10/22 09:37:24

CKT SIZE	DIM 'A'	DIM 'B'	DIM 'C'	DIM 'D'	DIM 'E'
20	34.04	31.57	27.94	31.97	23.00
16	28.96	26.49	22.86	26.89	17.92
12	23.88	21.41	17.78	21.81	12.84
8	18.80	16.53	12.70	16.73	7.76

RECOMMENDED PCB LAYOUT

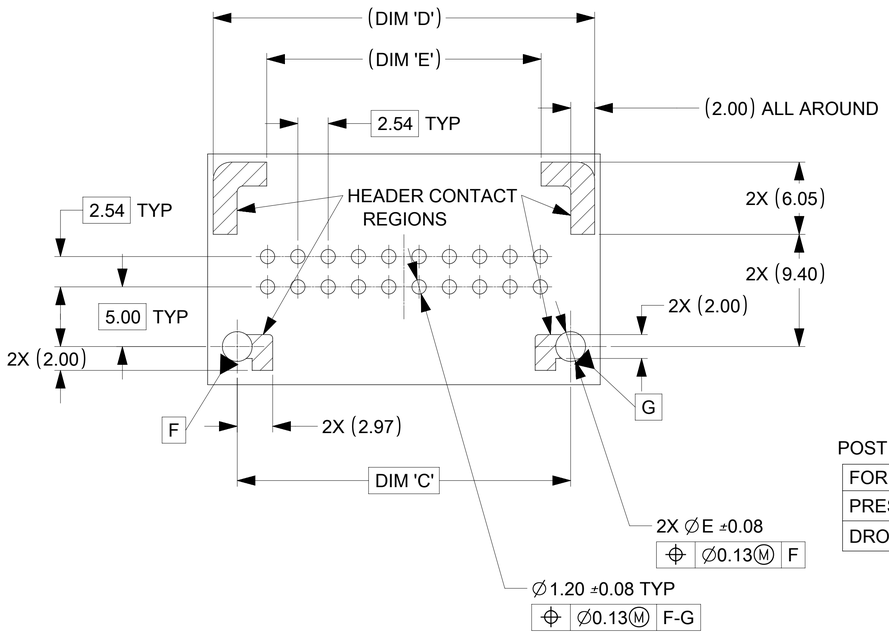

POST HOLE TABLE

FOR DIM E:	
PRESS FIT	∅2.60
DROP IN	∅3.05

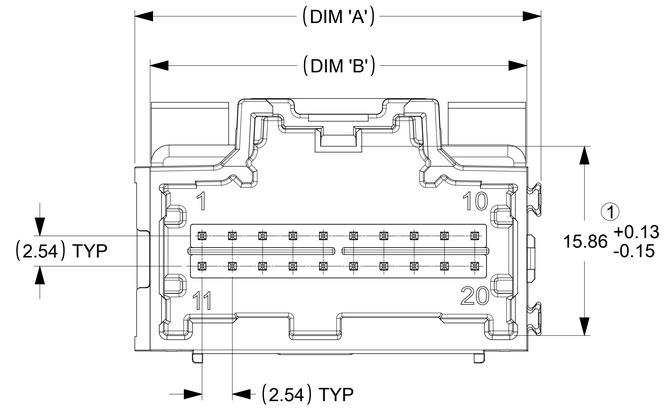

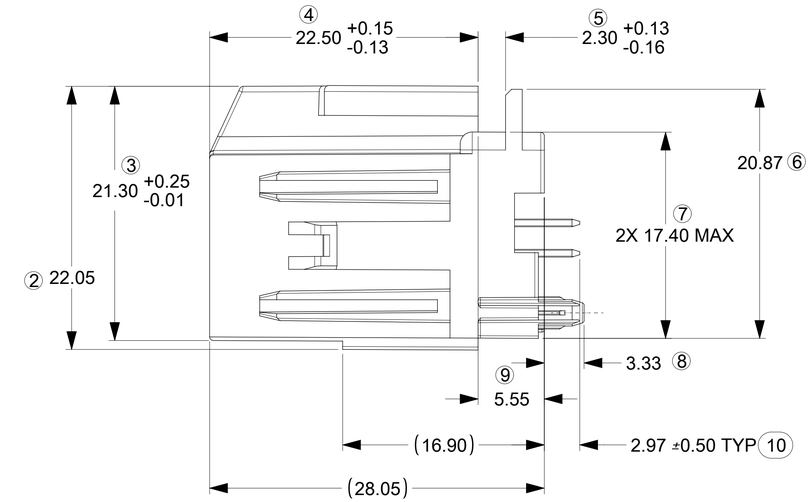

LAYOUT FOR 16 & 20 CKT. HEADERS
(20 CKT. OPTION 'A' SHOWN)

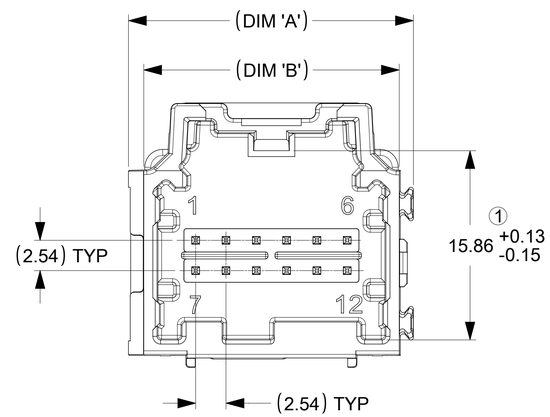

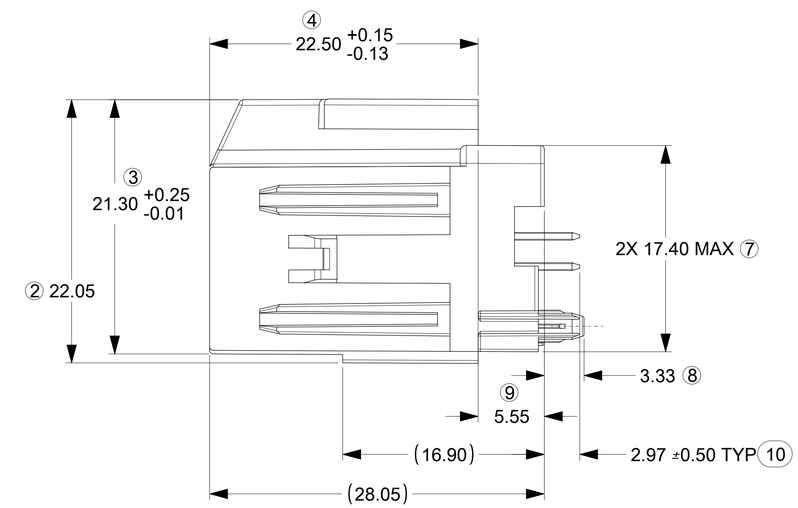

LAYOUT FOR 8 & 12 CKT. HEADERS
(12 CKT. OPTION 'A' SHOWN)

THIS DRAWING IS REDRAWING OF SD-34690-100 REV. H6

DOCUMENT STATUS	P1	RELEASE DATE	2020/10/22 09:37:24

THIS DRAWING CONTAINS INFORMATION THAT IS PROPRIETARY TO MOLEX ELECTRONIC TECHNOLOGIES, LLC AND SHOULD NOT BE USED WITHOUT WRITTEN PERMISSION

FUNCTIONAL SYMBOLS: FA = 0, FC = 0, FE = 0
DIVISIONAL SYMBOLS

DIMENSION UNITS	SCALE
mm	4:1

GENERAL TOLERANCES (UNLESS SPECIFIED)

ANGULAR TOL	±	3.0 °
4 PLACES	±	
3 PLACES	±	
2 PLACES	±	0.13
1 PLACE	±	0.25
0 PLACES	±	

DRAFT WHERE APPLICABLE MUST REMAIN WITHIN DIMENSIONS

CURRENT REV DESC: SEE REVISION SHEET

EC NO: 637858
DRWN: YPENG47 2020/05/19
CHK'D: CDZHANG 2020/10/22
APPR: CDZHANG 2020/10/22

INITIAL REVISION:
DRWN: AKUMARMS 2015/12/01
APPR: RBAUMAN 2016/08/23

THIRD ANGLE PROJECTION | DRAWING: D-SIZE | SERIES: 34690

molex

STAC64 SINGLE BAY
VERTICAL ASSEMBLY SALES DRAWING

PRODUCT CUSTOMER DRAWING

DOCUMENT NUMBER	DOC TYPE	DOC PART	REVISION
346900000	PSD	000	A4

MATERIAL NUMBER	CUSTOMER	SHEET NUMBER
SEE CHART		2 OF 2

2 BAY STAC64 VERTICAL HEADER ASSEMBLY
(P/N: 34707-2012 SHOWN)

DIMENSIONAL CHART FOR MULTIBAY CONFIGURATION:

PART NUMBER (TUBE PKG)	PART NUMBER (TRAY PKG)	BAY A			BAY B			DIM 'A'	DIM 'B'	DIM 'C'	DIM 'D'
		CKT	TYPE	POL	CKT	TYPE	POL				
34707-7000	34707-2000	20	0.64mm	A	20	0.64mm	B	66.94	64.47	27.94	27.94
TBD	34707-2001	20	0.64mm	A	20	0.64mm	C	66.94	64.47	27.94	27.94
TBD	34707-2002	20	0.64mm	C	20	0.64mm	D	66.94	64.47	27.94	27.94
TBD	34707-2003	20	0.64mm	C	20	0.64mm	A	66.94	64.47	27.94	27.94
TBD	34707-2004	12	0.64mm	A	20	0.64mm	A	56.78	54.31	17.78	27.94
TBD	34707-2005	12	0.64mm	A	10	HYBRID	A	56.78	54.31	17.78	27.94
TBD	34707-2006	12	0.64mm	B	10	HYBRID	A	56.78	54.31	17.78	27.94
TBD	34707-2007	10	HYBRID	A	20	0.64mm	B	66.94	64.47	27.94	27.94
34707-7012	34707-2012	10	HYBRID	A	20	0.64mm	C	66.94	64.47	27.94	27.94
TBD	34707-2022	20	0.64mm	C	10	HYBRID	A	66.94	64.47	27.94	27.94
TBD	34707-2023	20	0.64mm	A	20	0.64mm	D	66.94	64.47	27.94	27.94
TBD	34707-2030	10	HYBRID	B	10	HYBRID	A	66.94	64.47	27.94	27.94
TBD	34707-2040	12	0.64mm	A	12	0.64mm	B	46.62	44.15	17.78	17.78
TBD	34707-2050	20	0.64mm	A	16	0.64mm	A	61.86	59.39	27.94	22.86
TBD	34707-2060	20	0.64mm	A	12	0.64mm	A	56.78	54.31	27.94	17.78
TBD	34707-2070	16	0.64mm	A	8	0.64mm	C	46.62	44.15	22.86	12.70
34707-7080	34707-2080	12	0.64mm	A	20	0.64mm	B	56.78	54.31	17.78	27.94
TBD	34707-2090	16	0.64mm	A	16	0.64mm	B		54.31		

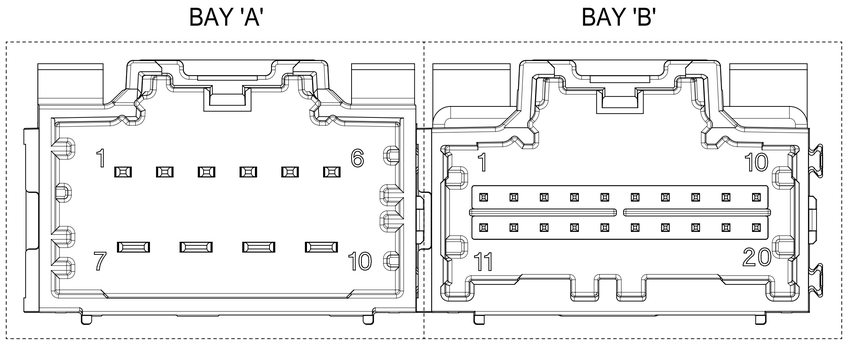

NOTES: VALID UNLESS OTHERWISE SPECIFIED
1. GENERAL:

a. CONNECTOR HEADER MUST BE VALIDATED TO THE FOLLOWING FUNCTIONAL REQUIREMENTS:

PRODUCT SPECIFICATION:
8-20 CKT 0.64mm PRODUCT SPEC: PS-34729-100/PS-31408-100
10/14 CKT HYBRID PRODUCT SPEC: PS-31372-100

b. APPLICATION REQUIREMENTS (REFERENCE ONLY):

APPLICATION SPECIFICATION: AS-34729-020/AS-31408-100

c. PACKAGING SPECIFICATION PER MOLEX DRAWING PK-31300-892 (TRAY)
d. PACKAGING SPECIFICATION PER MOLEX DRAWING PK-31301-063 (TUBE)

2. DESIGN: MATERIALS:

a. SHROUD (PLASTIC HOUSING):
RESIN - SPS 30%GF
COLORS:
POL A - BLACK
POL B - GRAY
POL C - BROWN
POL D - GREEN

b. 0.64mm PINS:
BASE MATERIAL: C26000
PLATING TYPE: AS NOTED

1.50/2.80mm BLADES:
BASE MATERIAL: C19400
PLATING TYPE: AS NOTED

3. PLATING REQUIREMENTS:

a. UNDERPLATING - OVERALL NICKEL

b. OVERPLATING - OVERALL TIN

4. FOR DESCRIPTION OF INDIVIDUAL BAYS, REFER TO THE FOLLOWING
SINGLE BAY DRAWINGS:
8-20 CKT 0.64: SD-34690-100
10 CKT HYBRID: SD-34695-100
14 CKT HYBRID: SD-34772-200

SYMBOLS
A = 0
C = 0
P = 0
S = 0
= 0
= 0
= 0
= 0
= 0
= 0

THIS DRAWING CONTAINS INFORMATION THAT IS PROPRIETARY TO MOLEX ELECTRONIC TECHNOLOGIES, LLC AND SHOULD NOT BE USED WITHOUT WRITTEN PERMISSION

DIMENSION UNITS	SCALE
mm	4:1

GENERAL TOLERANCES (UNLESS SPECIFIED)

ANGULAR TOL	±	3.0 °
4 PLACES	±	
3 PLACES	±	
2 PLACES	±	0.13
1 PLACE	±	0.25
0 PLACES	±	

DRAFT WHERE APPLICABLE MUST REMAIN WITHIN DIMENSIONS

CURRENT REV DESC:

EC NO: 612618
DRWN: SHANDITHAVAL 2019/02/22
CHK'D: RBAUMAN 2019/02/23
APPR: RBAUMAN 2019/02/23

INITIAL REVISION:
DRWN: MBAILEY 2008/08/14
APPR: SMARCEAU 2008/08/14

molex

2-BAY STAC64 VERTICAL
HEADER ASSEMBLY SALES DRAWING

PRODUCT CUSTOMER DRAWING

DOCUMENT NUMBER	DOC TYPE	DOC PART	REVISION
SD-34707-200	PSD	001	K7

THIRD ANGLE PROJECTION	DRAWING	SERIES	MATERIAL NUMBER	CUSTOMER	SHEET NUMBER
	D-SIZE	34707	SEE TABLE	GENERAL MARKET	1 OF 4

DOCUMENT STATUS	P1	RELEASE DATE	2019/02/23 23:32:56

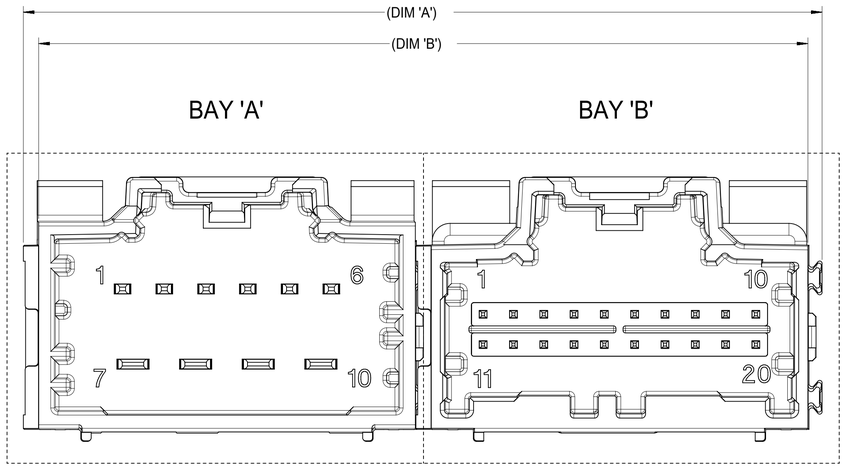

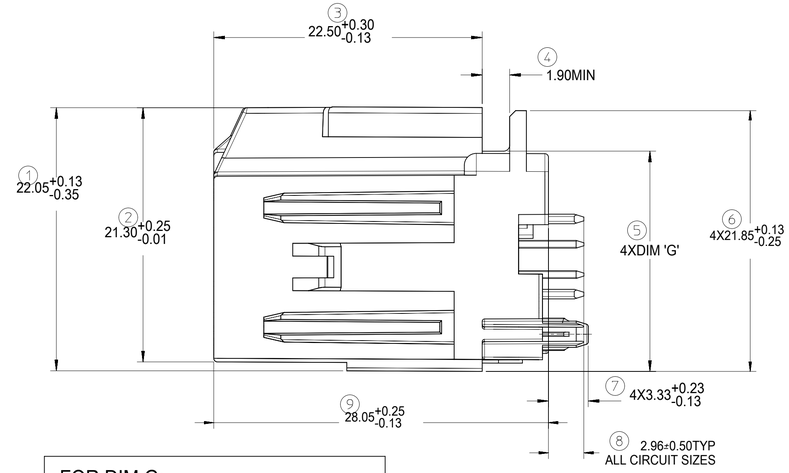

FOR DIM G:	
8-20CKT 0.64mm	18.40 MAX
10/14CKT Hybrid	18.59 MAX

RECOMMENDED PCB LAYOUT

INSERT NECESSARY BAY'S USING THE CHART ON SHEET 1.

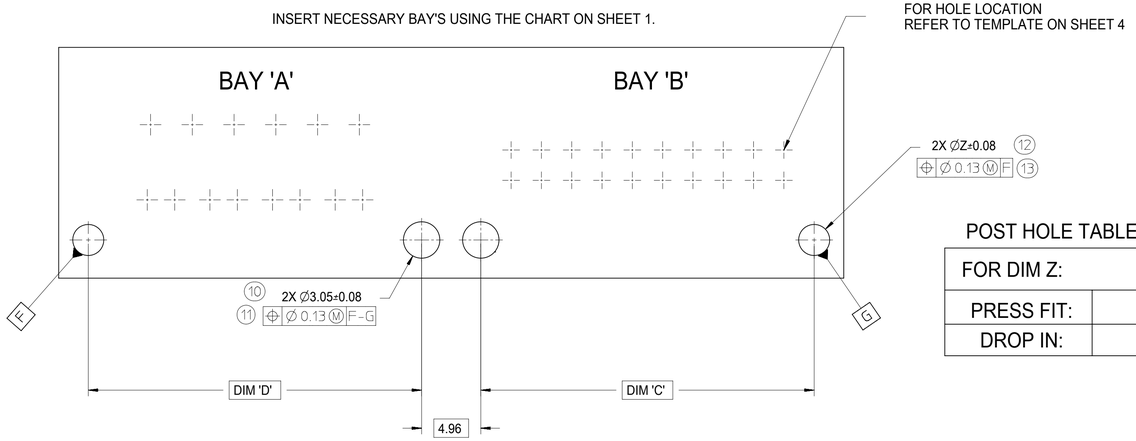

POST HOLE TABLE:

FOR DIM Z:	
PRESS FIT:	2.60
DROP IN:	3.05

SYMBOLS	
A	= 0
C	= 0
F	= 0
S	= 0
	= 0
E	= 0
	= 0
	= 0
V	= 0

THIS DRAWING CONTAINS INFORMATION THAT IS PROPRIETARY TO MOLEX ELECTRONIC TECHNOLOGIES, LLC AND SHOULD NOT BE USED WITHOUT WRITTEN PERMISSION

DIMENSION UNITS	SCALE
mm	4:1

GENERAL TOLERANCES (UNLESS SPECIFIED)

ANGULAR TOL	±	3.0 °
4 PLACES	±	
3 PLACES	±	
2 PLACES	±	0.13
1 PLACE	±	0.25
0 PLACES	±	

DRAFT WHERE APPLICABLE MUST REMAIN WITHIN DIMENSIONS

CURRENT REV DESC:

EC NO: 612618
DRWN: SHANDITHAVAL 2019/02/22
CHK'D: RBAUMAN 2019/02/23
APPR: RBAUMAN 2019/02/23

INITIAL REVISION:
DRWN: MBAILEY 2008/08/14
APPR: SMARCEAU 2008/08/14

THIRD ANGLE PROJECTION | DRAWING: D-SIZE | SERIES: 34707

molex

2-BAY STAC64 VERTICAL
HEADER ASSEMBLY SALES DRAWING

PRODUCT CUSTOMER DRAWING

DOCUMENT NUMBER	DOC TYPE	DOC PART	REVISION
SD-34707-200	PSD	001	K7

MATERIAL NUMBER	CUSTOMER	SHEET NUMBER
SEE TABLE	GENERAL MARKET	2 OF 4

DOCUMENT STATUS	P1	RELEASE DATE	2019/02/23 23:32:56

14CKT STAC HYRBID HEADER DETAILS

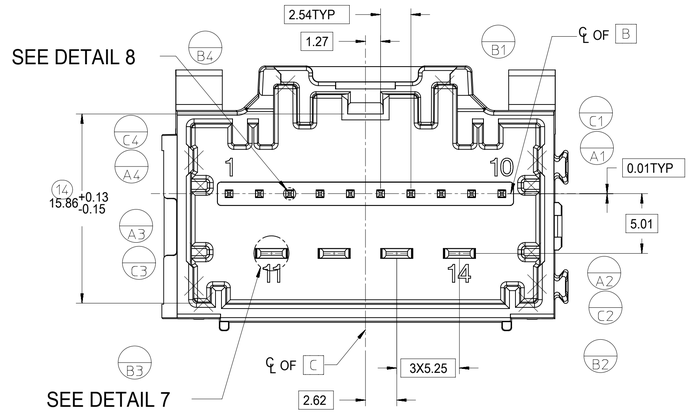

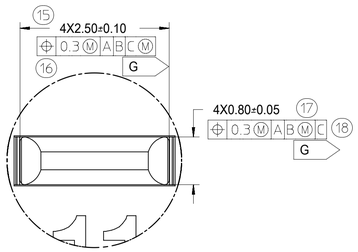

DETAIL 7
SCALE 20:1

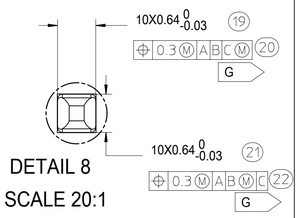

DETAIL 8
SCALE 20:1

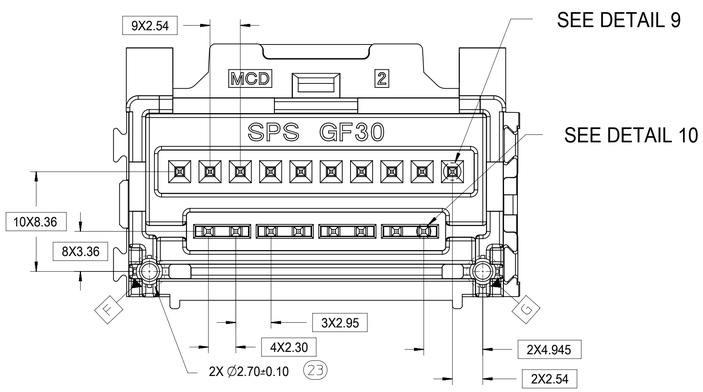

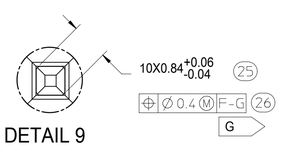

DETAIL 9
SCALE 15:1

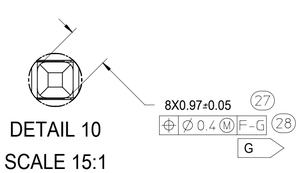

DETAIL 10
SCALE 15:1

8-20CKT STAC 0.64mm HEADER DETAILS

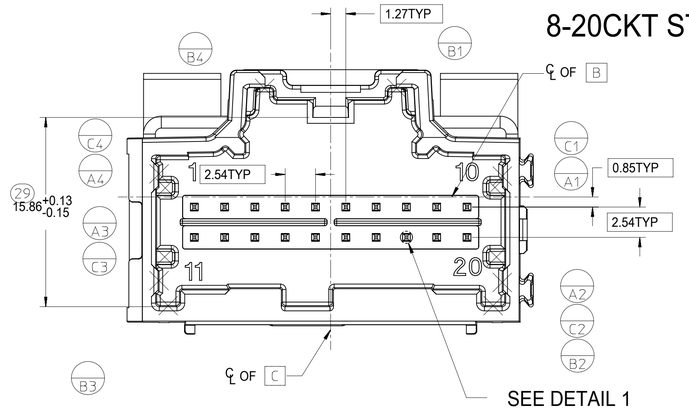

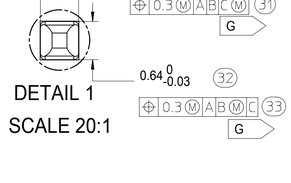

DETAIL 1
SCALE 20:1

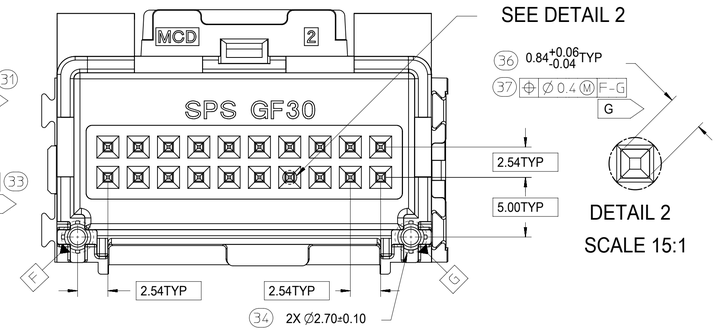

DETAIL 2
SCALE 15:1

10CKT STAC HYRBID HEADER DETAILS

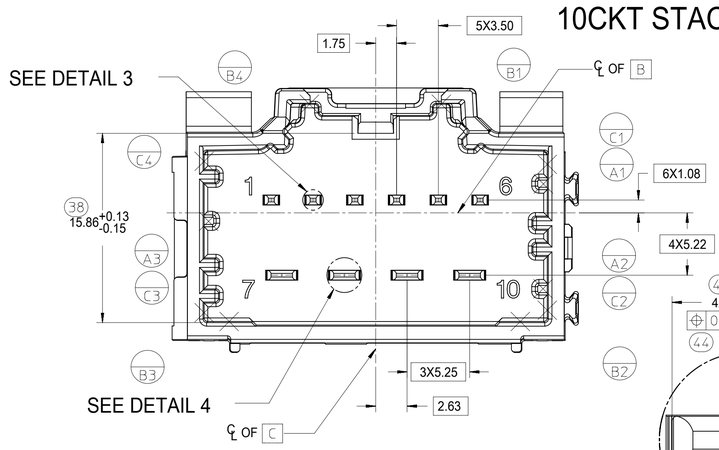

DETAIL 3
SCALE 20:1

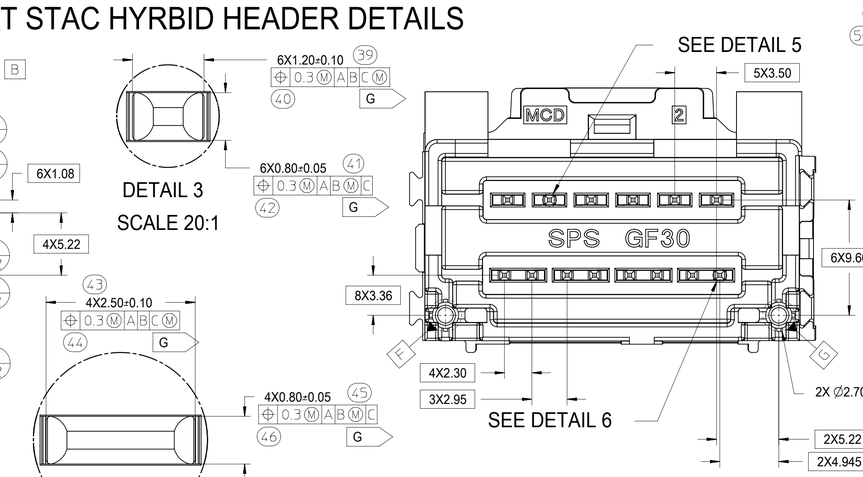

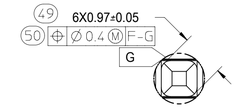

DETAIL 5
SCALE 15:1

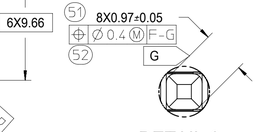

DETAIL 6
SCALE 15:1

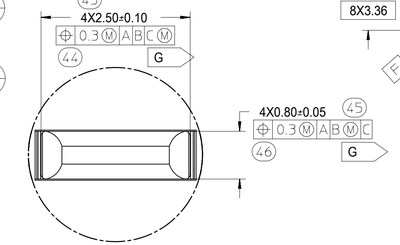

DETAIL 4
SCALE 20:1

SYMBOLS			
= 0	DIMENSION UNITS: mm	SCALE: 4:1	
= 0	GENERAL TOLERANCES (UNLESS SPECIFIED)		
= 0	ANGULAR TOL	±	3.0 °
= 0	4 PLACES	±	
= 0	3 PLACES	±	
= 0	2 PLACES	±	0.13
= 0	1 PLACE	±	0.25
= 0	0 PLACES	±	
= 0	DRAFT WHERE APPLICABLE MUST REMAIN WITHIN DIMENSIONS		

THIS DRAWING CONTAINS INFORMATION THAT IS PROPRIETARY TO MOLEX ELECTRONIC TECHNOLOGIES, LLC AND SHOULD NOT BE USED WITHOUT WRITTEN PERMISSION

CURRENT REV DESC:

EC NO: 612618
DRWN: SHANDITHAVAL 2019/02/22
CHK'D: RBAUMAN 2019/02/23
APPR: RBAUMAN 2019/02/23

INITIAL REVISION:
DRWN: MBAILEY 2008/08/14
APPR: SMARCEAU 2008/08/14

molex

2-BAY STAC64 VERTICAL
HEADER ASSEMBLY SALES DRAWING

PRODUCT CUSTOMER DRAWING

DOCUMENT NUMBER	DOC TYPE	DOC PART	REVISION
SD-34707-200	PSD	001	K7

THIRD ANGLE PROJECTION	DRAWING	SERIES	MATERIAL NUMBER	CUSTOMER	SHEET NUMBER
	D-SIZE	34707	SEE TABLE	GENERAL MARKET	3 OF 4

DOCUMENT STATUS	P1	RELEASE DATE	2019/02/23 23:32:56

10 CKT HYBRID TEMPLATE PCB LAYOUT

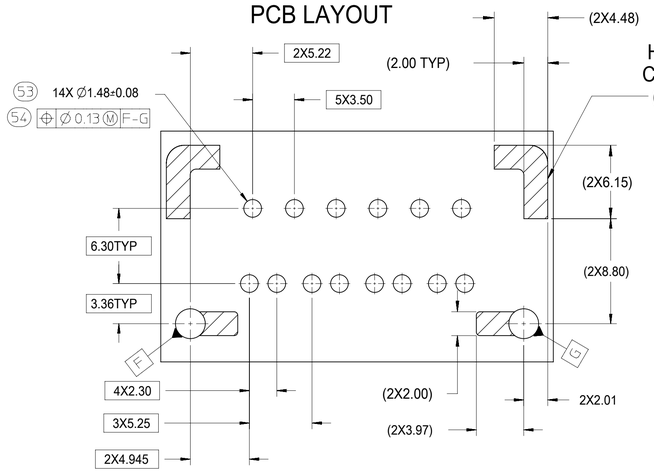

8-20 CKT 0.64mm TEMPLATE PCB LAYOUT

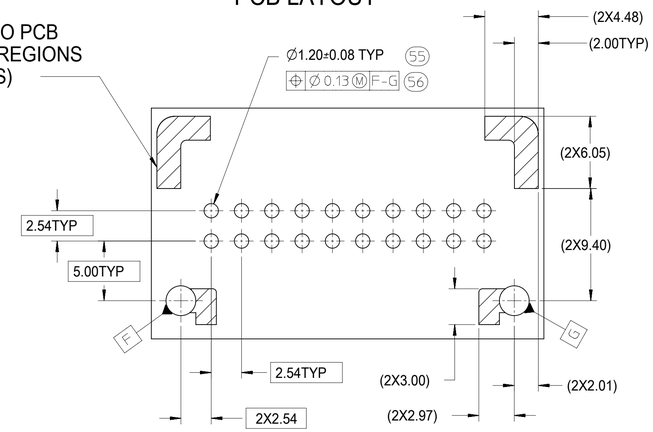

14 CKT HYBIRD TEMPLATE PCB LAYOUT

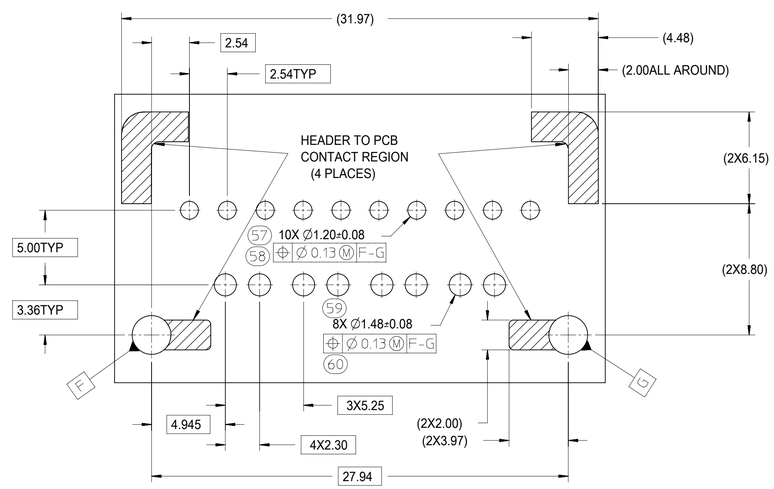

SYMBOLS	
A	= 0
C	= 0
F	= 0
S	= 0
▼	= 0
C	= 0
☒	= 0
■	= 0
V	= 0

THIS DRAWING CONTAINS INFORMATION THAT IS PROPRIETARY TO MOLEX ELECTRONIC TECHNOLOGIES, LLC AND SHOULD NOT BE USED WITHOUT WRITTEN PERMISSION

DIMENSION UNITS	SCALE
mm	4:1

GENERAL TOLERANCES (UNLESS SPECIFIED)

ANGULAR TOL	±	3.0 °
4 PLACES	±	
3 PLACES	±	
2 PLACES	±	0.13
1 PLACE	±	0.25
0 PLACES	±	

DRAFT WHERE APPLICABLE MUST REMAIN WITHIN DIMENSIONS

CURRENT REV DESC:

EC NO: 612618
DRWN: SHANDITHAVAL 2019/02/22
CHK'D: RBAUMAN 2019/02/23
APPR: RBAUMAN 2019/02/23

INITIAL REVISION:
DRWN: MBAILEY 2008/08/14
APPR: SMARCEAU 2008/08/14

molex

2-BAY STAC64 VERTICAL
HEADER ASSEMBLY SALES DRAWING

PRODUCT CUSTOMER DRAWING

DOCUMENT NUMBER	DOC TYPE	DOC PART	REVISION
SD-34707-200	PSD	001	K7

THIRD ANGLE PROJECTION	DRAWING	SERIES	MATERIAL NUMBER	CUSTOMER	SHEET NUMBER
	D-SIZE	34707	SEE TABLE	GENERAL MARKET	4 OF 4

DOCUMENT STATUS	P1	RELEASE DATE	2019/02/23 23:32:56

TEMPLATE FORMAT: SD-34707-000
REVISION: H
DATE: 2019/01/08

NOTES: VALID UNLESS OTHERWISE SPECIFIED
1. GENERAL:

a. CONNECTOR HEADER MUST BE VALIDATED TO THE FOLLOWING FUNCTIONAL REQUIREMENTS:

PRODUCT SPECIFICATION:
8-20 CKT 0.64mm PRODUCT SPEC: PS-34729-020/PS-31408-100
10/14 CKT HYBRID PRODUCT SPEC: PS-31372-100

b. APPLICATION REQUIREMENTS (REFERENCE ONLY):

APPLICATION SPECIFICATION: AS-34729-020/AS-31408-100

c. PACKAGING SPECIFICATION PER MOLEX DRAWING PK-31300-892 (TRAY)
c. PACKAGING SPECIFICATION PER MOLEX DRAWING PK-31301-063 (TUBE)

2. DESIGN: MATERIALS:

a. SHROUD (PLASTIC HOUSING):
RESIN - SPS 30%GF
COLOR:
POL A - BLACK
POL B - GRAY
POL C - BROWN
POL D - GREEN

b. 0.64mm PINS:
BASE MATERIAL: C26000
PLATING TYPE: AS NOTED

1.50/2.80mm BLADES:
BASE MATERIAL: C19400
PLATING TYPE: AS NOTED

3. PLATING REQUIREMENTS:

a. UNDERPLATING - OVERALL NICKEL

b. OVERPLATING - OVERALL TIN

4. FOR DESCRIPTION OF INDIVIDUAL BAYS, REFER TO THE FOLLOWING
SINGLE BAY DRAWINGS:
8-20 CKT 0.64: SD-34690-100
10 CKT HYBRID: SD-34695-100
14 CKT HYBRIDI SD-34772-200

5. G DENOTES DIMENSIONS THAT MAY BE QUALIFIED WITH A GAUGE.

3-BAY STAC64 VERTICAL HEADER ASSEMBLY
(P/N: 34707-3021 SHOWN)

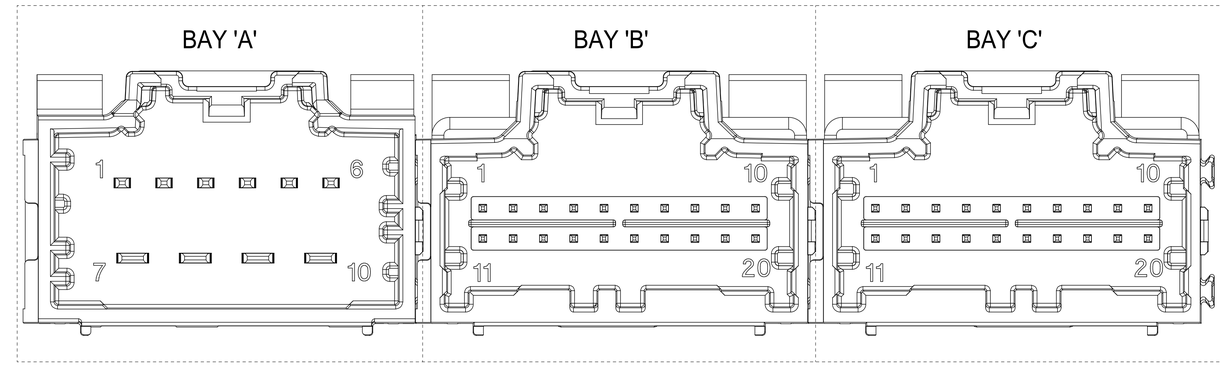

REV.	REV DESCRIPTION	CO#	DATE
K4	POL. DETAILS CORRECTED FOR P/N 34707-3101 IN CONFIGURATION CHART OF SHEET 2	CO-000001427	2022.10
K3	MOVED CONFIGURATION CHART TO SHEET 2 ADDED P/N 34707-3101 IN CONFIGURATION CHART OF SHEET 2	CO-000001427	2022.09

THIS DRAWING CONTAINS INFORMATION THAT IS PROPRIETARY TO MOLEX ELECTRONIC TECHNOLOGIES, LLC AND SHOULD NOT BE USED WITHOUT WRITTEN PERMISSION

FUNCTIONAL SYMBOLS
FA = 0
FC = 0
FP = 0
DIVISIONAL SYMBOLS

DIMENSION UNITS	SCALE
mm	1:1

GENERAL TOLERANCES (UNLESS SPECIFIED)	
ANGULAR TOL	± 1.0°
4 PLACES	±
3 PLACES	±
2 PLACES	± 0.130
1 PLACE	± 0.25
0 PLACES	±

DRAFT WHERE APPLICABLE MUST REMAIN WITHIN DIMENSIONS

CURRENT REV DESC: SEE REVISION CHART

PHASE: Design Production
CO NO: CO-000001427
DRWN: Raghu GV 2022-10-26
CHK'D: Cindy Zhang 2022-11-23
APPR: Colin Zhang 2022-11-28
INITIAL REVISION:
DRWN: RFC_PLMIMP
APPR:

THIRD ANGLE PROJECTION

DRAWING	SERIES
D-SIZE	34707

molex

3-BAY STAC64 VERTICAL HEADER ASSEMBLY

PRODUCT SALES DRAWING

DOCUMENT NUMBER	DOC TYPE	DOC PART	REVISION
SD-34707-300	PSD	001	K4

MATERIAL NUMBER	CUSTOMER	SHEET NUMBER
SEE TABLE	GENERAL MARKET	1 OF 5

DIMENSIONAL CHART FOR MULTIBAY CONFIGURATION:

PART NUMBER (TUBE PKG)	PART NUMBER (TRAY PKG)	BAY A			BAY B			BAY C			DIM 'A'	DIM 'B'	DIM 'C'	DIM 'D'	DIM 'E'
		CKT	TYPE	POL	CKT	TYPE	POL	CKT	TYPE	POL					
TBD	34707-3010	20	0.64mm	A	8	0.64mm	A	16	0.64mm	A	79.52	77.05	22.86	12.70	27.94
TBD	34707-3020	16	0.64mm	B	8	0.64mm	B	20	0.64mm	B	79.52	77.05	27.94	12.70	22.86
TBD	34707-3021	10	HYBRID	A	20	0.64mm	C	20	0.64mm	D	99.84	97.37	27.94	27.94	27.94
TBD	34707-3030	12	0.64mm	A	20	0.64mm	C	20	0.64mm	D	89.68	87.21	27.94	27.94	17.78
TBD	34707-3040	20	0.64mm	A	20	0.64mm	B	20	0.64mm	C	99.84	97.37	27.94	27.94	27.94
TBD	34707-3050	16	0.64mm	A	16	0.64mm	B	16	0.64mm	C	84.60	82.13	22.86	22.86	22.86
TBD	34707-3060	20	0.64mm	B	16	0.64mm	C	10	HYBRID	A	94.76	92.29	27.94	22.86	27.94
TBD	34707-3070	10	HYBRID	A	10	HYBRID	B	10	HYBRID	C	99.84	97.37	27.94	27.94	27.94
TBD	34707-3090	20	0.64mm	A	20	0.64mm	C	8	0.64mm	B	84.60	82.13	27.94	27.94	12.70
TBD	34707-3100	14	HYBRID	A	20	0.64mm	A	20	0.64mm	B	99.84	97.37	27.94	27.94	27.94
K4 TBD	34707-3101	10	HYBRID	B	16	0.64mm	B	8	0.64mm	B	79.52	77.05	27.94	22.86	12.70

FUNCTIONAL SYMBOLS
FA = 0
FC = 0
FD = 0
DIVISIONAL SYMBOLS

THIS DRAWING CONTAINS INFORMATION THAT IS PROPRIETARY TO MOLEX ELECTRONIC TECHNOLOGIES, LLC AND SHOULD NOT BE USED WITHOUT WRITTEN PERMISSION

DIMENSION UNITS: mm
SCALE: 1:1

GENERAL TOLERANCES (UNLESS SPECIFIED)
ANGULAR TOL ± 1.0"
4 PLACES ±
3 PLACES ±
2 PLACES ± 0.130
1 PLACE ± 0.25
0 PLACES ±
DRAFT WHERE APPLICABLE MUST REMAIN WITHIN DIMENSIONS

CURRENT REV DESC: SEE REVISION CHART

PHASE: Design Production
CO NO: CO-000001427
DRWN: Raghu GV 2022-10-26
CHK'D: Cindy Zhang 2022-11-23
APPR: Colin Zhang 2022-11-28

INITIAL REVISION:
DRWN: JDUNAJ 2009/03/10
APPR: SMARCEU 2009/03/11

THIRD ANGLE PROJECTION
DRAWING: D-SIZE
SERIES: 34707

molex

3-BAY STAC64 VERTICAL HEADER ASSEMBLY

PRODUCT SALES DRAWING

DOCUMENT NUMBER: SD-34707-300
DOC TYPE: PSD
DOC PART: 001
REVISION: K4
MATERIAL NUMBER: SEE TABLE
CUSTOMER: GENERAL MARKET
SHEET NUMBER: 2 OF 5

FORMAT TC-Alpha-H2
REVISION: A
DATE: 2017-04-11

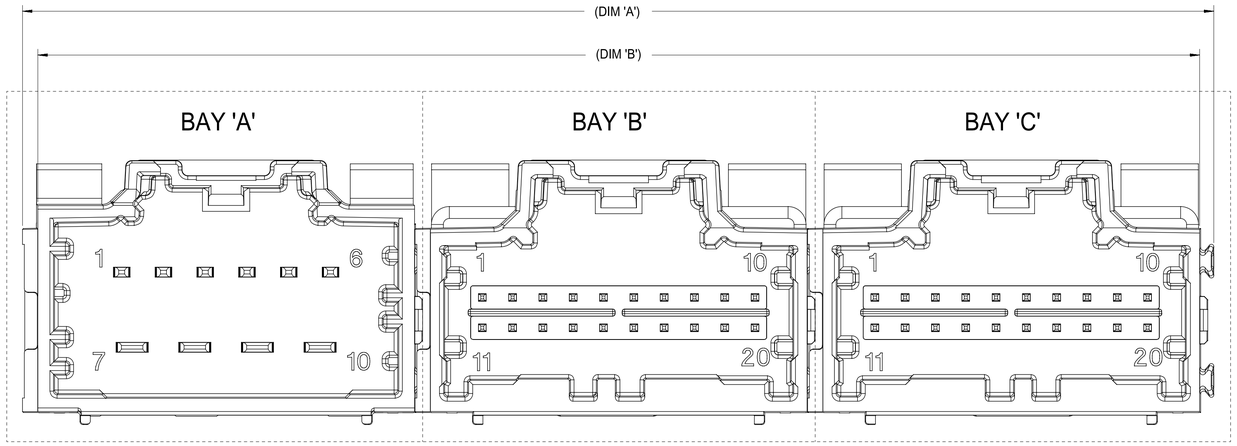

RECOMMENDED PCB LAYOUT

INSERT NECESSARY BAYS USING CHART ON SHEET 2

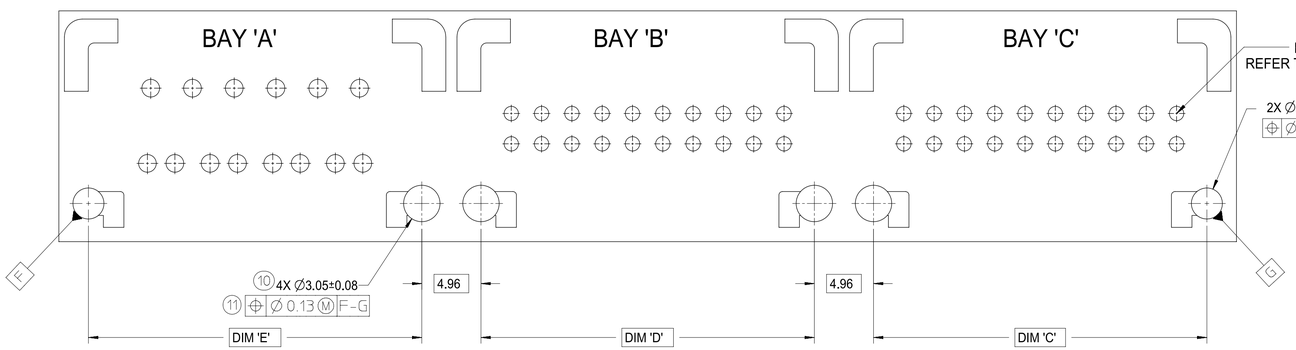

POST HOLE TABLE:

FOR DIM Z:	
PRESS FIT:	2.60
DROP IN:	3.05

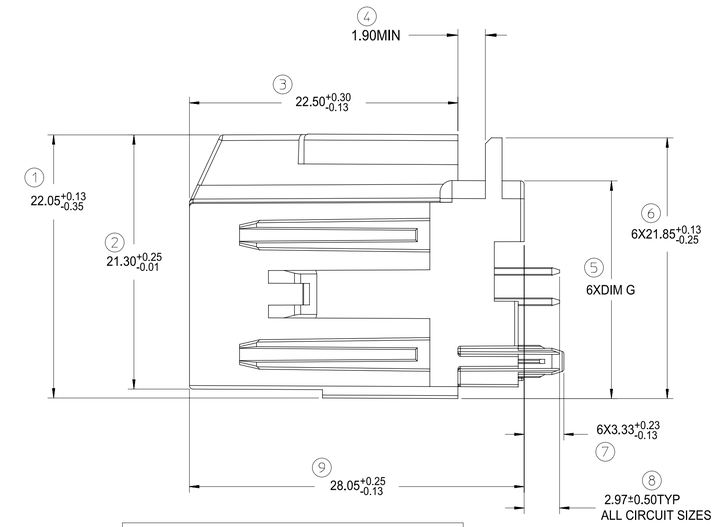

FOR DIM G:	
8-20CKT 0.64mm	18.40 MAX
10/14CKT Hybrid	18.59 MAX

FUNCTIONAL SYMBOLS
FA = 0
FC = 0
FD = 0
DIVISIONAL SYMBOLS

THIS DRAWING CONTAINS INFORMATION THAT IS PROPRIETARY TO MOLEX ELECTRONIC TECHNOLOGIES, LLC AND SHOULD NOT BE USED WITHOUT WRITTEN PERMISSION

DIMENSION UNITS	SCALE
mm	4:1

GENERAL TOLERANCES (UNLESS SPECIFIED)

ANGULAR TOL	± 1.0°
4 PLACES	±
3 PLACES	±
2 PLACES	± 0.130
1 PLACE	± 0.25
0 PLACES	±

DRAFT WHERE APPLICABLE MUST REMAIN WITHIN DIMENSIONS

CURRENT REV DESC: SEE REVISION CHART

PHASE: Design Production
CO NO: CO-000001427
DRWN: Raghu GV 2022-10-26
CHK'D: Cindy Zhang 2022-11-23
APPR: Colin Zhang 2022-11-28

INITIAL REVISION:
DRWN: JDUNAJ 2009/03/10
APPR: SMARCEU 2009/03/11

THIRD ANGLE PROJECTION | DRAWING: D-SIZE | SERIES: 34707

molex

3-BAY STAC64 VERTICAL HEADER ASSEMBLY

PRODUCT SALES DRAWING

DOCUMENT NUMBER	DOC TYPE	DOC PART	REVISION
SD-34707-300	PSD	001	K4

MATERIAL NUMBER	CUSTOMER	SHEET NUMBER
SEE TABLE	GENERAL MARKET	3 OF 5

FORMAT TC-Engineer07
REVISION A
DATE: 2021/06/10

14CKT STAC HYBRID HEADER DETIALS

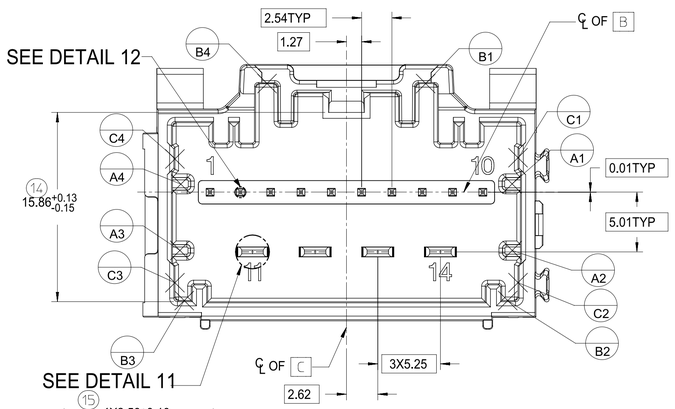

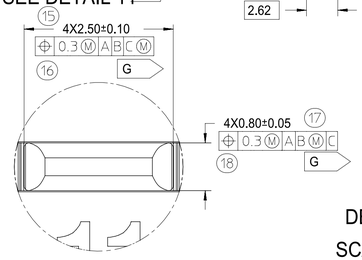

DETAIL 11
SCALE 20:1

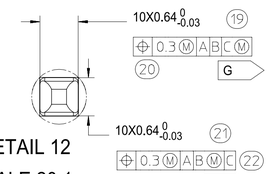

DETAIL 12
SCALE 20:1

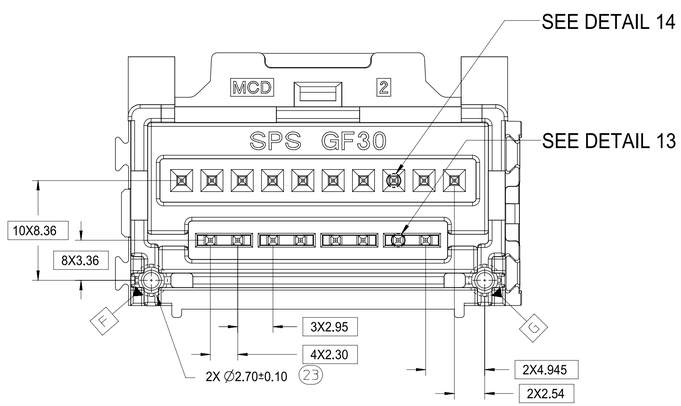

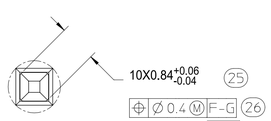

DETAIL 14
SCALE 15:1

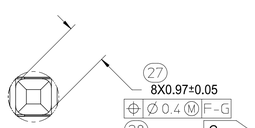

DETAIL 13
SCALE 15:1

8-20CKT STAC 0.64mm HEADER DETIALS

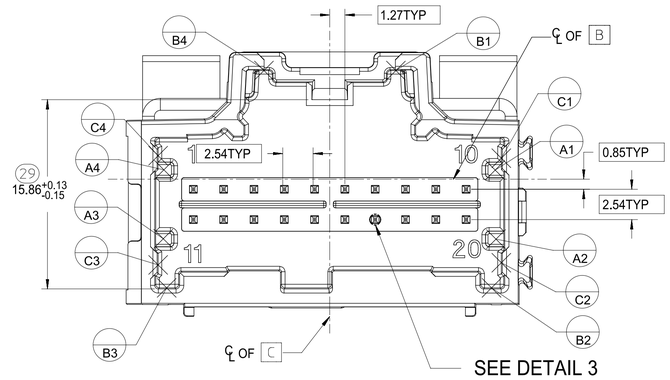

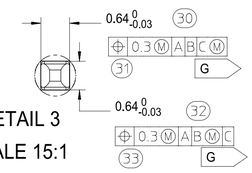

DETAIL 3
SCALE 15:1

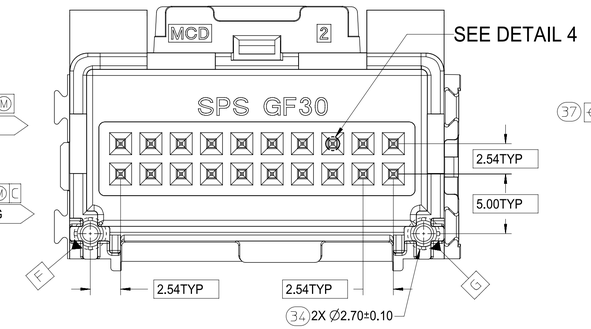

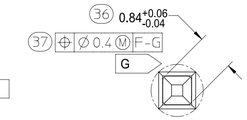

DETAIL 4
SCALE 15:1

10CKT STAC HYBRID HEADER DETIALS

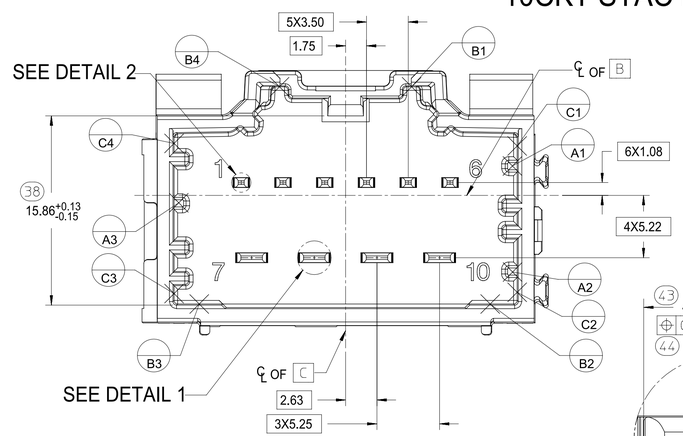

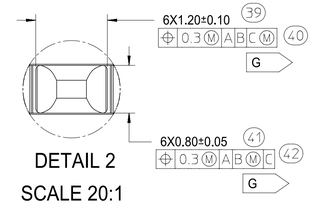

DETAIL 2
SCALE 20:1

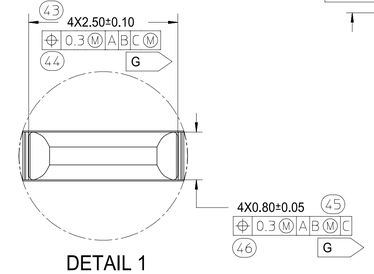

DETAIL 1
SCALE 20:1

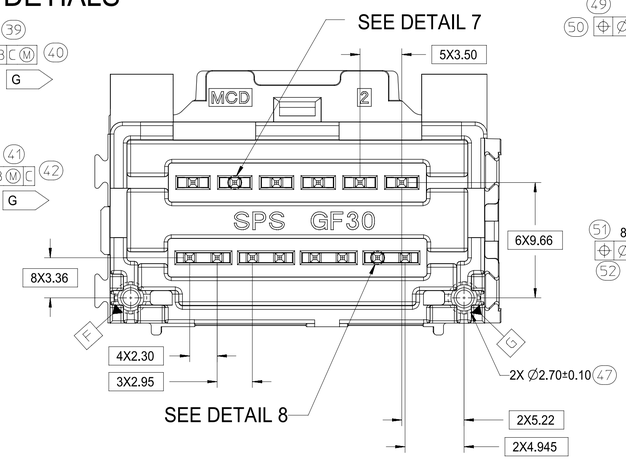

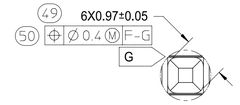

DETAIL 7
SCALE 15:1

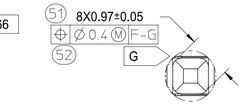

DETAIL 8
SCALE 15:1

FUNCTIONAL SYMBOLS	THIS DRAWING CONTAINS INFORMATION THAT IS PROPRIETARY TO MOLEX ELECTRONIC TECHNOLOGIES, LLC AND SHOULD NOT BE USED WITHOUT WRITTEN PERMISSION						
FA = 0	DIMENSION UNITS: mm	SCALE: 4:1	CURRENT REV DESC: SEE REVISION CHART			molex	
FC = 0	GENERAL TOLERANCES (UNLESS SPECIFIED)		PHASE: Design Production			3-BAY STAC64 VERTICAL HEADER ASSEMBLY	
FP = 0	ANGULAR TOL ± 1.0°		CO NO: CO-000001427				
DIVISIONAL SYMBOLS	4 PLACES ±		DRWN: Raghu GV	2022-10-26			
	3 PLACES ±		CHK'D: Cindy Zhang	2022-11-23			
	2 PLACES ± 0.130		APPR: Colin Zhang	2022-11-28		PRODUCT SALES DRAWING	
	1 PLACE ± 0.25		INITIAL REVISION:				
	0 PLACES ±		DRWN: JDUNAJ	2009/03/10		DOCUMENT NUMBER: SD-34707-300	DOC TYPE: PSD / DOC PART: 001 / REVISION: K4
			APPR: SMARCEU	2009/03/11			
	DRAFT WHERE APPLICABLE MUST REMAIN WITHIN DIMENSIONS		THIRD ANGLE PROJECTION	DRAWING: D-SIZE	SERIES: 34707	MATERIAL NUMBER: SEE TABLE	CUSTOMER: GENERAL MARKET / SHEET NUMBER: 4 OF 5

10 CKT HYBRID TEMPLATE PCB LAYOUT

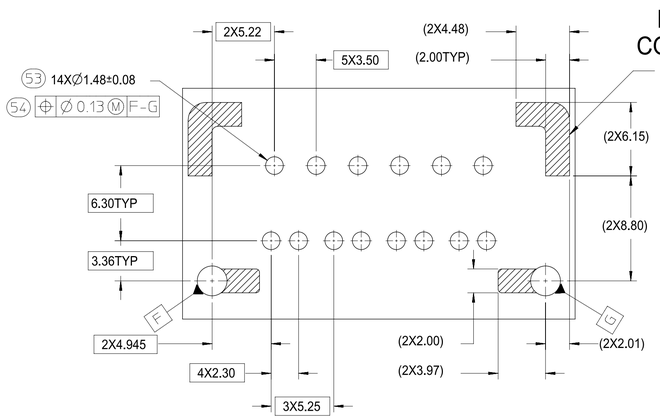

HEADER TO PCB CONTACT REGIONS (8 PLACES)

8-20 CKT 0.64mm TEMPLATE PCB LAYOUT

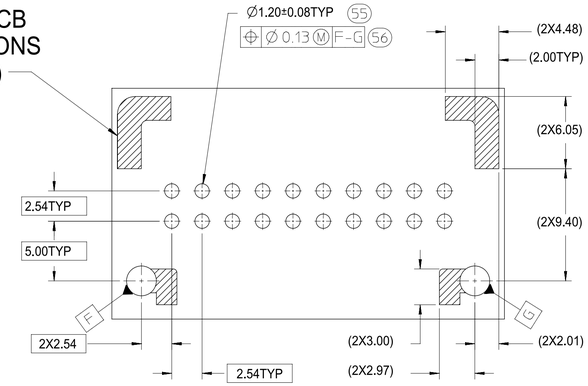

14 CKT HYBIRD TEMPLATE PCB LAYOUT

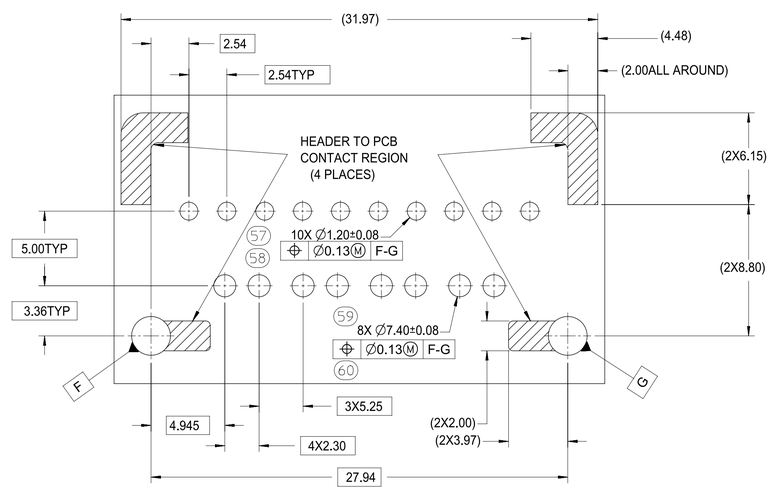

FUNCTIONAL SYMBOLS	THIS DRAWING CONTAINS INFORMATION THAT IS PROPRIETARY TO MOLEX ELECTRONIC TECHNOLOGIES, LLC AND SHOULD NOT BE USED WITHOUT WRITTEN PERMISSION		
FA = 0	DIMENSION UNITS: mm	SCALE: 4:1	CURRENT REV DESC: SEE REVISION CHART
FC = 0	GENERAL TOLERANCES (UNLESS SPECIFIED)		PHASE: Design Production
FP = 0	ANGULAR TOL ± 1.0°		CO NO: CO-000001427
DIVISIONAL SYMBOLS	4 PLACES ±		DRWN: Raghu GV 2022-10-26
	3 PLACES ±		CHK'D: Cindy Zhang 2022-11-23
	2 PLACES ± 0.130		APPR: Colin Zhang 2022-11-28
	1 PLACE ± 0.25		INITIAL REVISION:
	0 PLACES ±		DRWN: JDUNAJ 2009/03/10
	DRAFT WHERE APPLICABLE MUST REMAIN WITHIN DIMENSIONS		APPR: SMARCEU 2009/03/11

molex

3-BAY STAC64 VERTICAL HEADER ASSEMBLY

PRODUCT SALES DRAWING

DOCUMENT NUMBER	DOC TYPE	DOC PART	REVISION
SD-34707-300	PSD	001	K4

THIRD ANGLE PROJECTION	DRAWING	SERIES	MATERIAL NUMBER	CUSTOMER	SHEET NUMBER
	D-SIZE	34707	SEE TABLE	GENERAL MARKET	5 OF 5

DIMENSIONAL CHART FOR MULTIBAY CONFIGURATION:

PART NUMBER (TUBE PKG)	PART NUMBER (TRAY PKG)	BAY A			BAY B			BAY C			BAY D								
		CKT	TYPE	POL	CKT	TYPE	POL	CKT	TYPE	POL	CKT	TYPE	POL	DIM 'A'	DIM 'B'	DIM 'C'	DIM 'D'	DIM 'E'	DIM 'F'
34707-9000	34707-4000	20	0.64mm	A	20	0.64mm	B	20	0.64mm	C	20	0.64mm	D	132.74	130.27	27.94	27.94	27.94	27.94
TBD	34707-4010	12	0.64mm	A	20	0.64mm	A	8	0.64mm	A	16	0.64mm	A	102.26	99.79	17.78	27.94	12.70	22.86
TBD	34707-4020	20	0.64mm	D	20	0.64mm	C	20	0.64mm	B	20	0.64mm	A	132.74	130.27	27.94	27.94	27.94	27.94

4 BAY STAC64 VERTICAL HEADER ASSEMBLY
(P/N: 34707-4000 SHOWN)

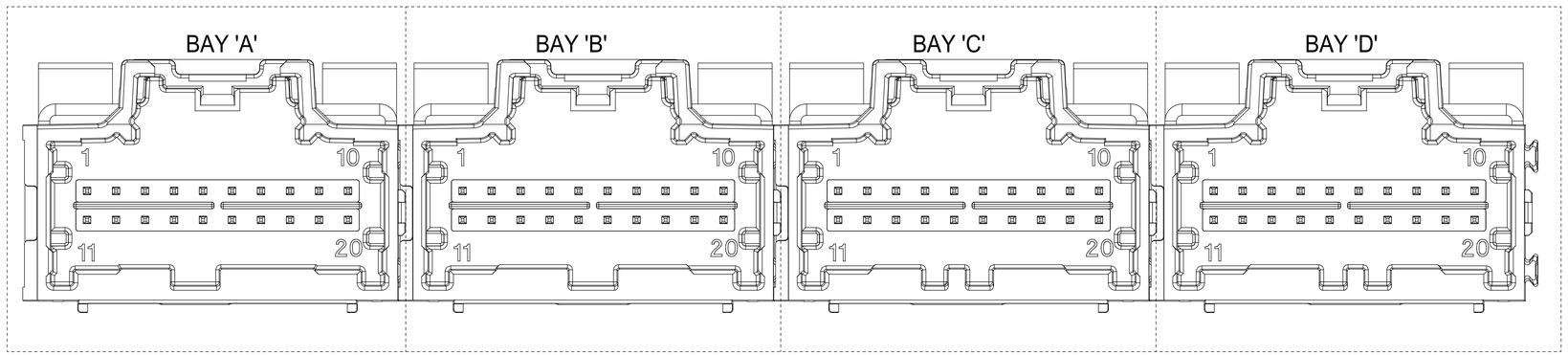

NOTES: VALID UNLESS OTHERWISE SPECIFIED
1. GENERAL:

a. CONNECTOR HEADER MUST BE VALIDATED TO THE FOLLOWING FUNCTIONAL REQUIREMENTS:

PRODUCT SPECIFICATION:
8-20 CKT 0.64mm PRODUCT SPEC: PS-34729-020/PS-31408-100
10/14 CKT HYBRID PRODUCT SPEC: PS-31372-100

b. APPLICATION REQUIREMENTS (REFERENCE ONLY):

APPLICATION SPECIFICATION: AS-34729-020/AS-31408-100

c. PACKAGING SPECIFICATION PER MOLEX DRAWING PK-31300-892 (TRAY)
d. PACKAGING SPECIFICATION PER MOLEX DRAWING PK-31301-063 (TUBE)

2. DESIGN: MATERIALS:

a. SHROUD (PLASTIC HOUSING):
RESIN - SPS 30%GF

b. 0.64mm PINS:
BASE MATERIAL: C26000
PLATING TYPE: AS NOTED

1.50/2.80mm BLADES:
BASE MATERIAL: C19400
PLATING TYPE: AS NOTED

3. PLATING REQUIREMENTS:

a. UNDERPLATING - OVERALL NICKEL

b. OVERPLATING - OVERALL TIN

4. FOR DESCRIPTION OF INDIVIDUAL BAYS, REFER TO THE FOLLOWING
SINGLE BAY DRAWINGS:
8-20 CKT 0.64: SD-34690-100
10 CKT HYBRID: SD-34695-100
14 CKT HYBRID: SD-34772-200

SYMBOLS
A = 0
E = 0
F = 0
S = 0
= 0
C = 0
= 0
= 0
V = 0

THIS DRAWING CONTAINS INFORMATION THAT IS PROPRIETARY TO MOLEX ELECTRONIC TECHNOLOGIES, LLC AND SHOULD NOT BE USED WITHOUT WRITTEN PERMISSION

DIMENSION UNITS	SCALE
mm	4:1

GENERAL TOLERANCES (UNLESS SPECIFIED)

ANGULAR TOL	±	3.0 °
4 PLACES	±	
3 PLACES	±	
2 PLACES	±	0.13
1 PLACE	±	0.25
0 PLACES	±	

DRAFT WHERE APPLICABLE MUST REMAIN WITHIN DIMENSIONS

CURRENT REV DESC:

EC NO: 612618
DRWN: SHANDITHAVAL 2019/02/22
CHK'D: RBAUMAN 2019/02/23
APPR: RBAUMAN 2019/02/23

INITIAL REVISION:
DRWN: VDANIELE 2008/11/14
APPR: SMARCEAU 2008/11/14

molex

4-BAY STAC64 VERTICAL
HEADER ASSEMBLY SALES DRAWING

PRODUCT CUSTOMER DRAWING

DOCUMENT NUMBER	DOC TYPE	DOC PART	REVISION
SD-34707-400	PSD	001	D9

THIRD ANGLE PROJECTION	DRAWING	SERIES	MATERIAL NUMBER	CUSTOMER	SHEET NUMBER
	D-SIZE	34707	SEE TABLE	GENERAL MARKET	1 OF 4

DOCUMENT STATUS	P1	RELEASE DATE	2019/02/23	23:32:59

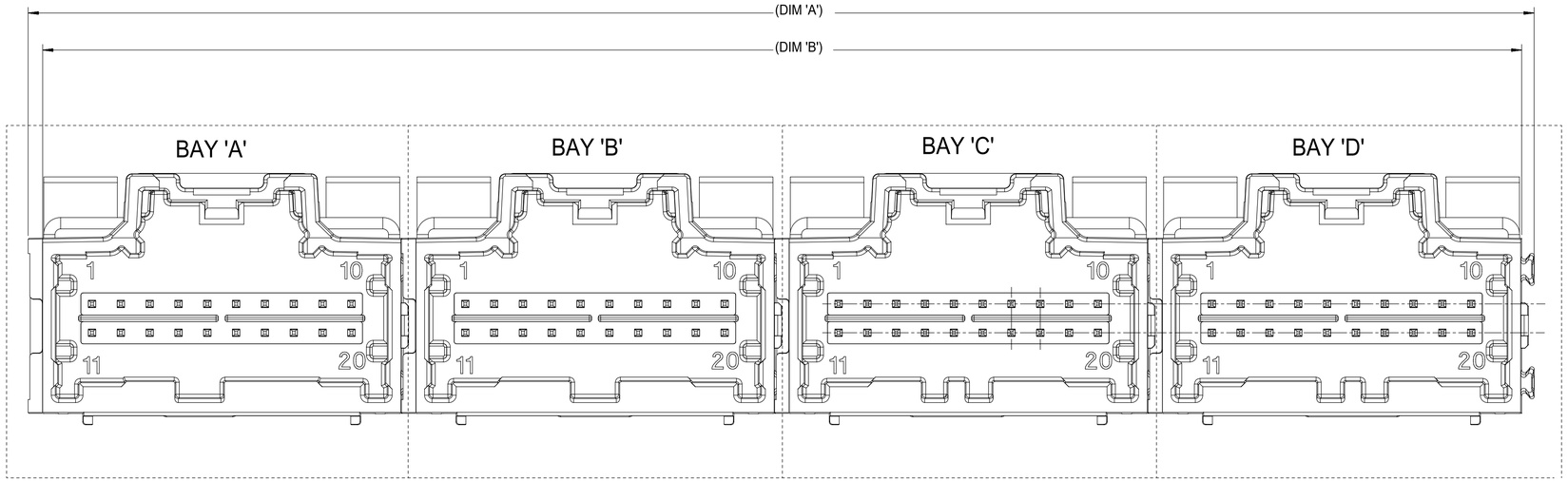

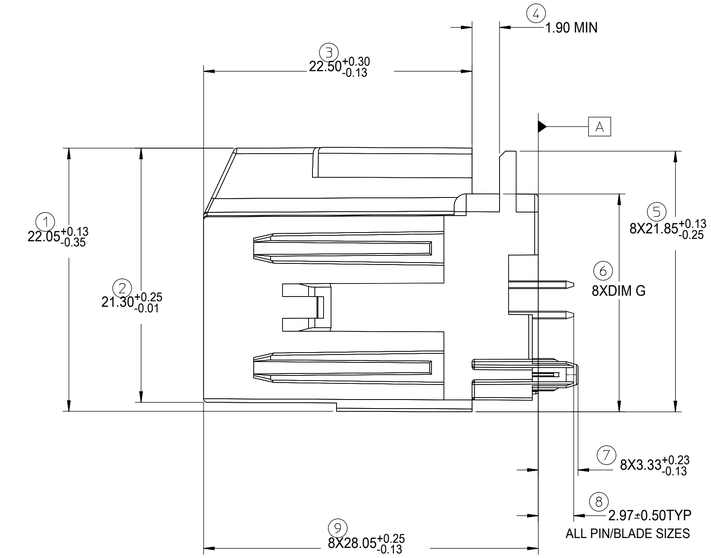

FOR DIM G:	
8-20CKT 0.64mm	18.40 MAX
10/14CKT Hybrid	18.59 MAX

RECOMMENDED PCB LAYOUT
INSERT NECESSARY BAY'S USING THE CHART ON SHEET 1

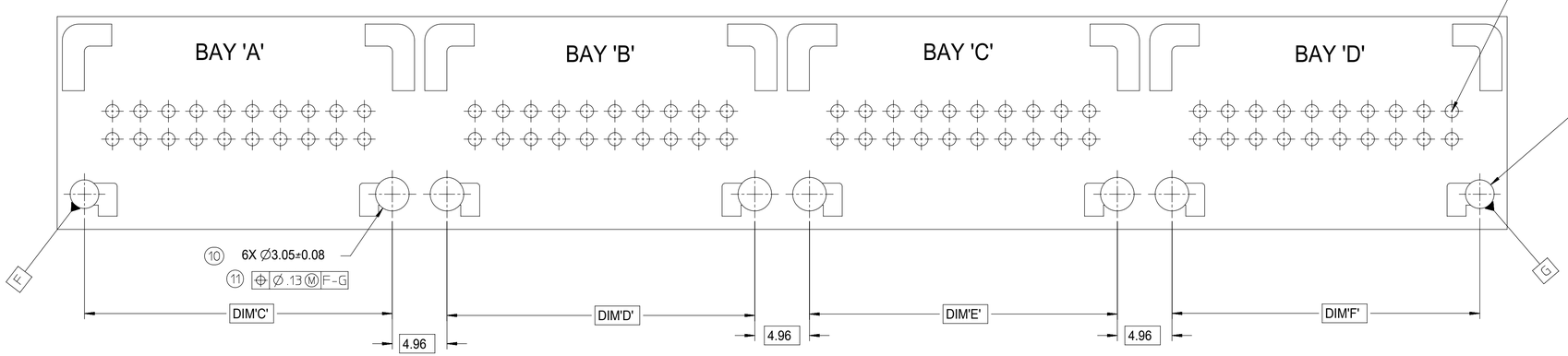

POST HOLE TABLE

FOR DIM Z:	
PRESS FIT	2.60
DROP IN	3.05

SYMBOLS	
E/A	= 0
E/C	= 0
E/B	= 0
S	= 0
▼	= 0
C	= 0
☒	= 0
■	= 0
V	= 0

THIS DRAWING CONTAINS INFORMATION THAT IS PROPRIETARY TO MOLEX ELECTRONIC TECHNOLOGIES, LLC AND SHOULD NOT BE USED WITHOUT WRITTEN PERMISSION

DIMENSION UNITS	SCALE
mm	4:1

GENERAL TOLERANCES (UNLESS SPECIFIED)

ANGULAR TOL	±	3.0 °
4 PLACES	±	
3 PLACES	±	
2 PLACES	±	0.13
1 PLACE	±	0.25
0 PLACES	±	

DRAFT WHERE APPLICABLE MUST REMAIN WITHIN DIMENSIONS

CURRENT REV DESC:

EC NO: 612618
DRWN: SHANDITHAVAL 2019/02/22
CHK'D: RBAUMAN 2019/02/23
APPR: RBAUMAN 2019/02/23

INITIAL REVISION:
DRWN: VDANIELE 2008/11/14
APPR: SMARCEAU 2008/11/14

THIRD ANGLE PROJECTION | DRAWING: D-SIZE | SERIES: 34707

molex

4-BAY STAC64 VERTICAL
HEADER ASSEMBLY SALES DRAWING

PRODUCT CUSTOMER DRAWING

DOCUMENT NUMBER	DOC TYPE	DOC PART	REVISION
SD-34707-400	PSD	001	D9

MATERIAL NUMBER	CUSTOMER	SHEET NUMBER
SEE TABLE	GENERAL MARKET	2 OF 4

DOCUMENT STATUS	P1	RELEASE DATE	2019/02/23 23:32:59

14CKT STAC HYBRID HEADER DETAILS

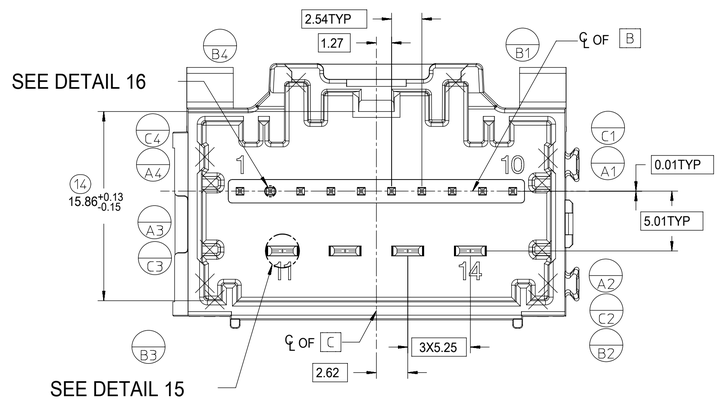

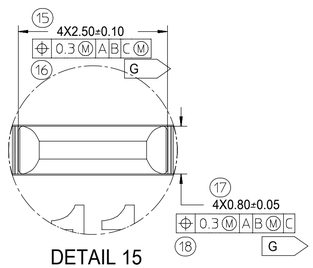

DETAIL 15
SCALE 20:1

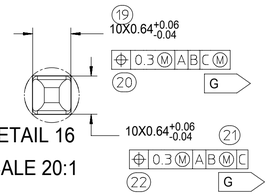

DETAIL 16
SCALE 20:1

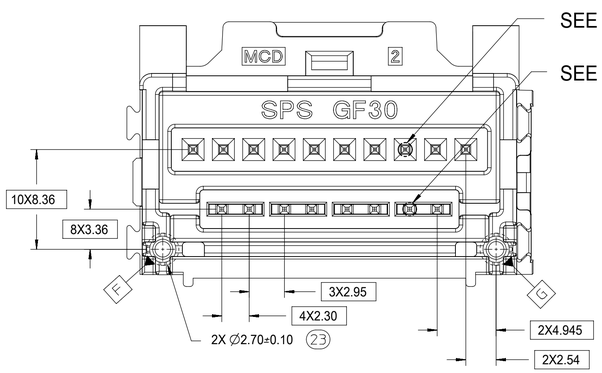

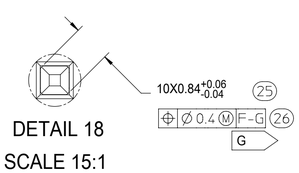

DETAIL 18
SCALE 15:1

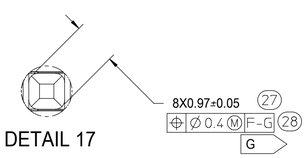

DETAIL 17
SCALE 15:1

8-20CKT STAC 0.64mm HEADER DETAILS

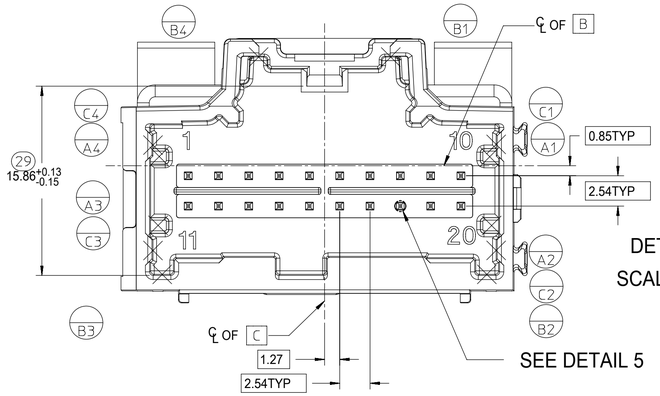

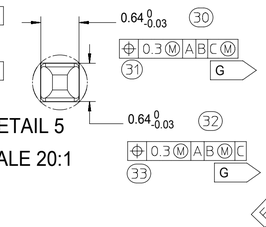

DETAIL 5
SCALE 20:1

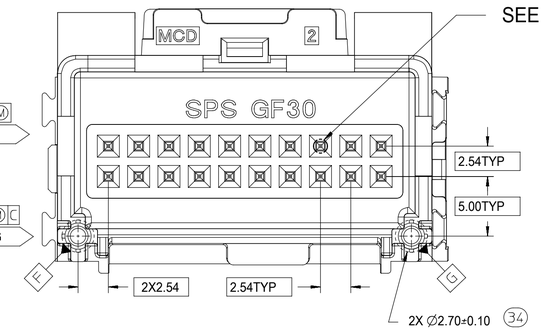

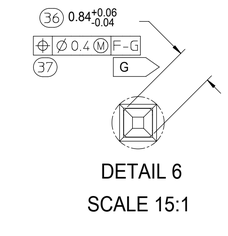

DETAIL 6
SCALE 15:1

10CKT STAC HYBRID HEADER DETAILS

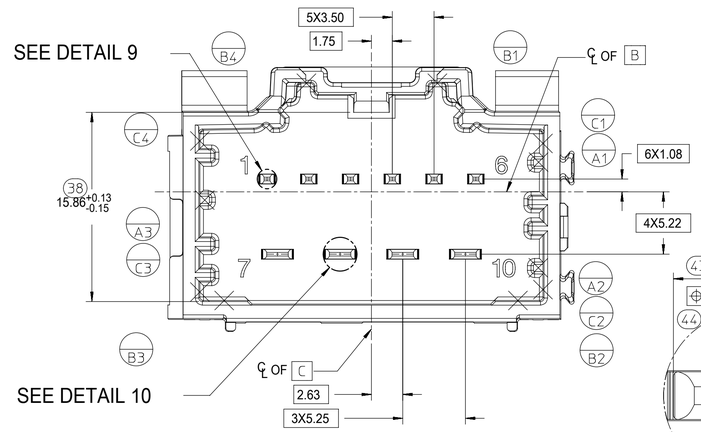

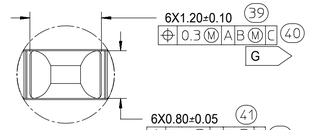

DETAIL 9
SCALE 20:1

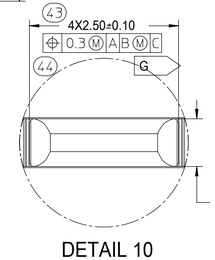

DETAIL 10
SCALE 20:1

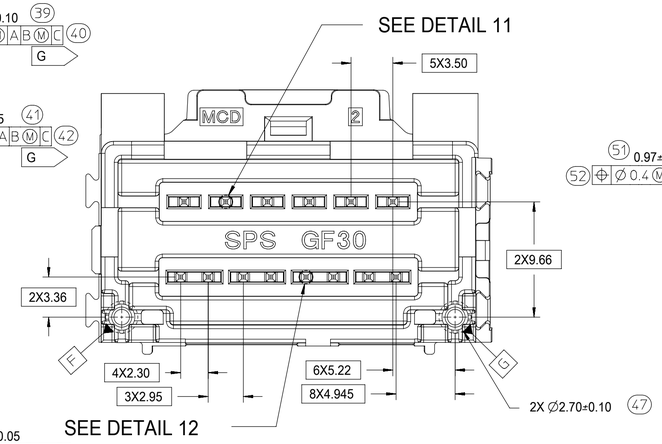

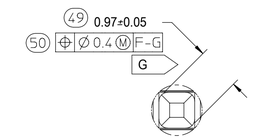

DETAIL 11
SCALE 15:1

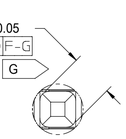

DETAIL 12
SCALE 15:1

SYMBOLS	
= 0	
= 0	
= 0	
= 0	
= 0	
= 0	
= 0	
= 0	
= 0	

THIS DRAWING CONTAINS INFORMATION THAT IS PROPRIETARY TO MOLEX ELECTRONIC TECHNOLOGIES, LLC AND SHOULD NOT BE USED WITHOUT WRITTEN PERMISSION

DIMENSION UNITS	SCALE
mm	4:1

GENERAL TOLERANCES (UNLESS SPECIFIED)

ANGULAR TOL	±	3.0 °
4 PLACES	±	
3 PLACES	±	
2 PLACES	±	0.13
1 PLACE	±	0.25
0 PLACES	±	

DRAFT WHERE APPLICABLE MUST REMAIN WITHIN DIMENSIONS

CURRENT REV DESC:

EC NO: 612618
DRWN: SHANDITHAVAL 2019/02/22
CHK'D: RBAUMAN 2019/02/23
APPR: RBAUMAN 2019/02/23

INITIAL REVISION:
DRWN: VDANIELE 2008/11/14
APPR: SMARCEAU 2008/11/14

THIRD ANGLE PROJECTION | DRAWING: D-SIZE | SERIES: 34707

molex

4-BAY STAC64 VERTICAL
HEADER ASSEMBLY SALES DRAWING

PRODUCT CUSTOMER DRAWING

DOCUMENT NUMBER	DOC TYPE	DOC PART	REVISION
SD-34707-400	PSD	001	D9

MATERIAL NUMBER	CUSTOMER	SHEET NUMBER
SEE TABLE	GENERAL MARKET	3 OF 4

DOCUMENT STATUS	P1	RELEASE DATE	2019/02/23 23:32:59

10 CKT HYBRID TEMPLATE PCB LAYOUT

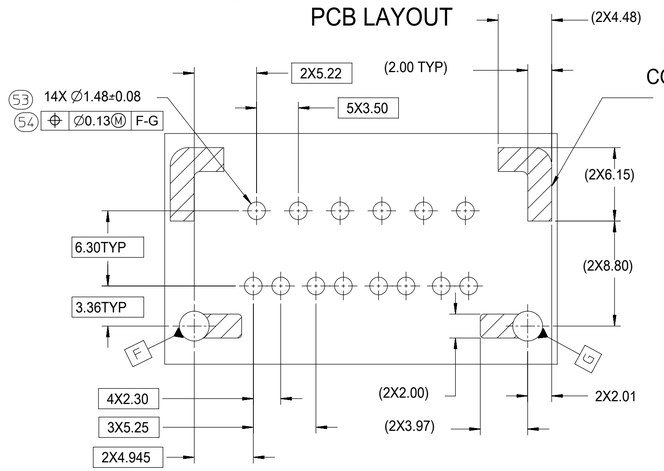

HEADER TO PCB CONTACT REGIONS (8 PLACES)

8-20 CKT 0.64mm TEMPLATE PCB LAYOUT

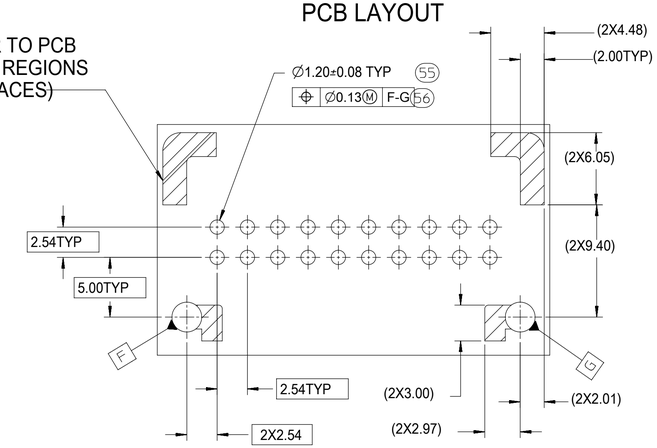

14 CKT HYBIRD TEMPLATE PCB LAYOUT

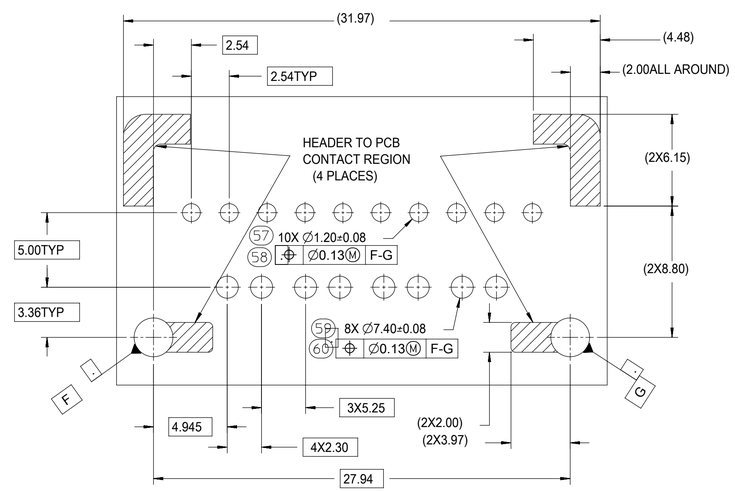

SYMBOLS	
A	= 0
C	= 0
F	= 0
S	= 0
	= 0
	= 0
	= 0
	= 0
	= 0

THIS DRAWING CONTAINS INFORMATION THAT IS PROPRIETARY TO MOLEX ELECTRONIC TECHNOLOGIES, LLC AND SHOULD NOT BE USED WITHOUT WRITTEN PERMISSION

DIMENSION UNITS	SCALE
mm	4:1

GENERAL TOLERANCES (UNLESS SPECIFIED)

ANGULAR TOL	±	3.0 °
4 PLACES	±	
3 PLACES	±	
2 PLACES	±	0.13
1 PLACE	±	0.25
0 PLACES	±	

DRAFT WHERE APPLICABLE MUST REMAIN WITHIN DIMENSIONS

CURRENT REV DESC:

EC NO: 612618
DRWN: SHANDITHAVAL 2019/02/22
CHK'D: RBAUMAN 2019/02/23
APPR: RBAUMAN 2019/02/23

INITIAL REVISION:
DRWN: VDANIELE 2008/11/14
APPR: SMARCEAU 2008/11/14

molex

4-BAY STAC64 VERTICAL
HEADER ASSEMBLY SALES DRAWING

PRODUCT CUSTOMER DRAWING

DOCUMENT NUMBER	DOC TYPE	DOC PART	REVISION
SD-34707-400	PSD	001	D9

THIRD ANGLE PROJECTION	DRAWING	SERIES	MATERIAL NUMBER	CUSTOMER	SHEET NUMBER
	D-SIZE	34707	SEE TABLE	GENERAL MARKET	4 OF 4

DOCUMENT STATUS	P1	RELEASE DATE	2019/02/23 23:32:59

TEMPLATE FILENAME: SD-34707-400.DWT
REVISION: H
DATE: 2019/01/18