PART NO. W/O CAP IN TUBE	CKT SIZE	DIMENSION				
		A	B	C	D	E
87833-262*	26	24.00	26.85	28.65	27.00	20.00

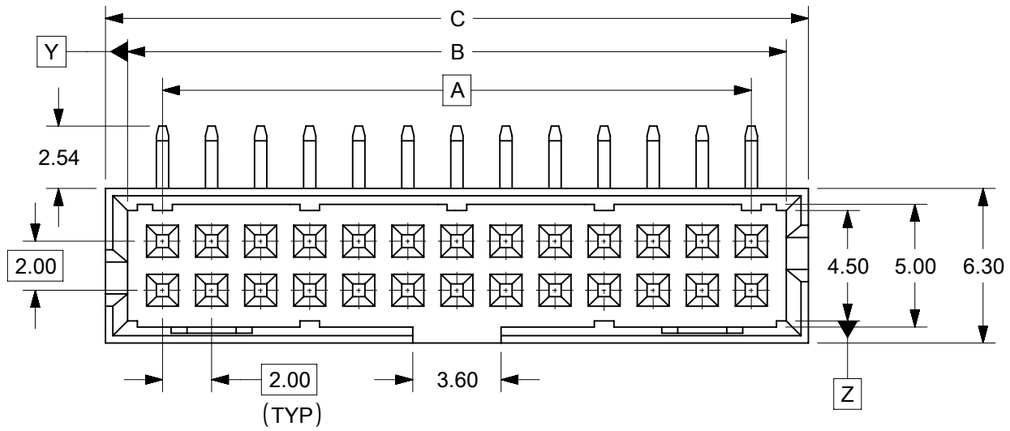

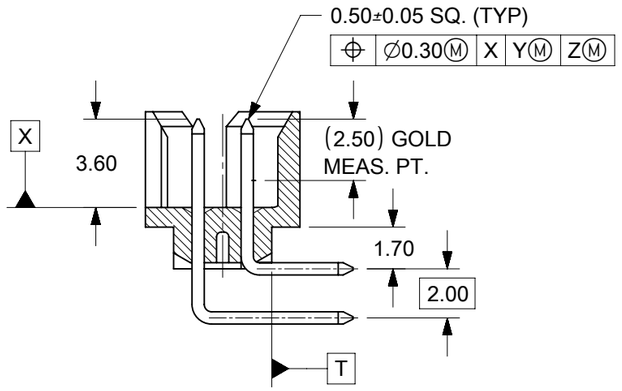

SECTION G-G

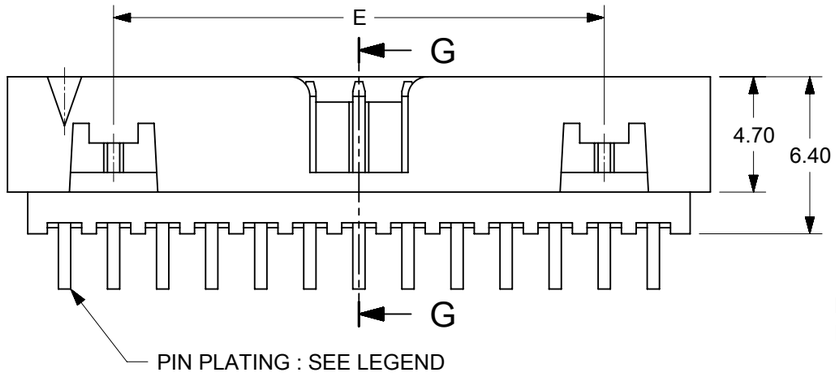

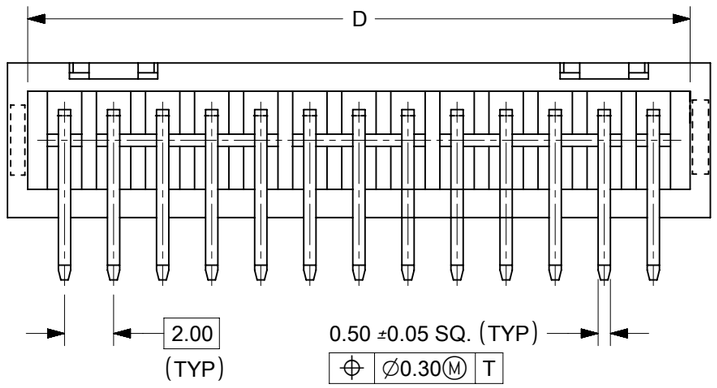

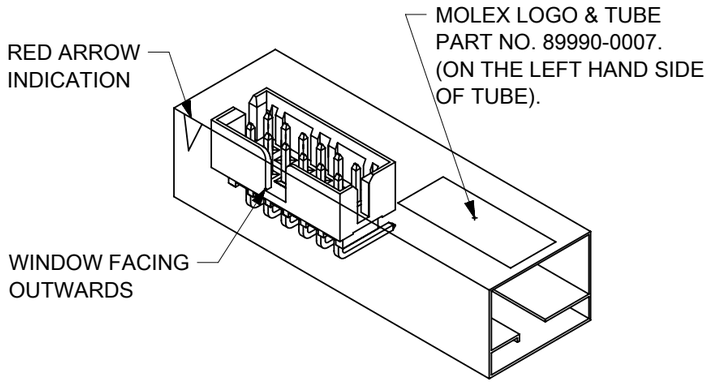

REF: ORIENTATION OF PART IN TUBE.
(FOR THE REFERENCE OF PART/TUBE ASSEMBLY.)

PART NUMBER LEGEND :

87833 - 26 * *

PLATING OPTIONS:

22 - 0.38µm/15µin GOLD IN CONTACT AREA AND 1.88µm/75µin MIN. TIN IN SOLDER TAIL AREA OVER 1.27µm/50µin MIN. NICKEL OVERALL.

23 - 0.76µm/30µin GOLD IN CONTACT AREA AND 1.88µm/75µin MIN.TIN IN SOLDER TAIL AREA OVER 1.27µm/50µin MIN. NICKEL OVERALL.

NOTES:

1. MATERIAL :
   HOUSING : 30% G.F., NYLON 46, UL94V-0, COLOR BLACK.
   PIN : 0.50mm SQ. PHOSPHOR BRONZE.
2. PIN PUSHOUT FORCE : 0.91kg MIN. IN EITHER DIRECTION.
3. PRODUCT SPECIFICATION PS-87831-027 APPLIES.
4. PRODUCT HAS A WIDER POLARIZATION SLOT COMPARE TO THE STANDARD FAMILY SERIES.
5. THIS HEADER MATES WITH MOLEX:
   a) CRIMP RECEPTACLE HOUSING, 51110 SERIES WITH CRIMP TERMINAL, 50394 SERIES.
   b) 2mm MILLIGRID DUAL ROW IDT, 87568 SERIES.
6. PARTS TO BE PACKED IN TUBE WITH MOISTURE BARRIER BAG.

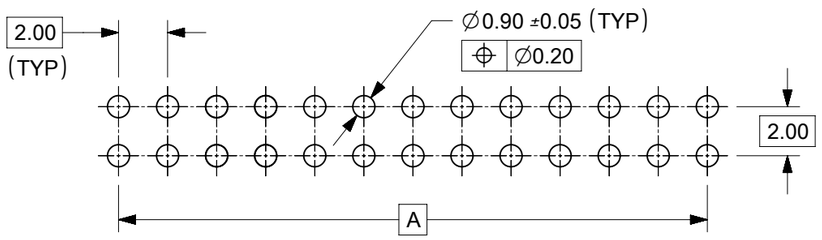

RECOMMENDED PCB PATTERN

DOCUMENT STATUS	P1	RELEASE DATE	2019/01/28 08:48:02

SYMBOLS: E/A = 0; E/C = 0; E/D = 0; E/B = 0; ▼ = 0; E/F = 0; ☒ = 0; ■ = 0; E/V = 0

THIS DRAWING CONTAINS INFORMATION THAT IS PROPRIETARY TO MOLEX ELECTRONIC TECHNOLOGIES, LLC AND SHOULD NOT BE USED WITHOUT WRITTEN PERMISSION

DIMENSION UNITS	SCALE
MM	1:1

GENERAL TOLERANCES (UNLESS SPECIFIED)

	MM	INCH
4 PLACES	±	±
3 PLACES	±	±
2 PLACES	± 0.2	±
1 PLACE	±	±
0 PLACES	±	±
ANGULAR TOL	± 3.0 °	

DRAFT WHERE APPLICABLE MUST REMAIN WITHIN DIMENSIONS

CURRENT REV DESC: SEE ECM 170067 FOR REFERENCE

EC NO: 611028

DRWN:	ME	2019/01/17
CHK'D:	MKAMATHMARAK	2019/01/25
APPR:	ME	2019/01/28

INITIAL REVISION:

DRWN:	ATSEE	2003/10/27
APPR:	SKTOH	2003/11/07

THIRD ANGLE PROJECTION | DRAWING: A3-SIZE | SERIES: 87833

molex

SALES DRAWING
MGRID, R/A SHROUDED HDR W/SLOTS AND STANDOFF

PRODUCT CUSTOMER DRAWING

DOCUMENT NUMBER	DOC TYPE	DOC PART	REVISION
SD-87833-018	PSD	001	A4

MATERIAL NUMBER	CUSTOMER	SHEET NUMBER
SEE TABLE	GENERAL MARKET	1 OF 1