PART NUMBER CODING

_ _C02SXNN-S_ _ _

MODIFICATION
OMIT = STANDARD
S328 = BROWN PPS

PLATING
ALL PLATINGS HAVE .000050" MIN NICKEL UNDERPLATE
S = .000010" GOLD, TYPE II GR C ON CONTACT SURFACE
M = .000030" GOLD, TYPE II GR C ON CONTACT SURFACE
D = .000030" GOLD , TYPE III, GR A OVERALL

MATERIAL (INSULATOR / CONTACT)
(SEE MATERIAL TABLE)

MATERIAL TABLE

LETTER CODE	INSULATOR / CONTACT	OPERATING TEMP.	MODIFICATION NUMBER
A**	BROWN PPS / BERYLLIUM COPPER	-65°C TO +150°C	S328
F*	GREEN PPS / SPINODAL	-65°C TO +200°C	OMIT
X*	TAN PEEK / SPINODAL	-65°C TO +250°C	OMIT

*AVAILABLE WITH 'D' PLATING ONLY
**AVAILABLE WITH 'S' OR 'M' PLATING ONLY

REVISIONS

REV.	ECO. NO	DESCRIPTION	DATE	BY
E	4769	REMOVE 'J' & 'M' MATERIAL	2/5/2024	JH
F	4786	REMOVE DWV NOTE	6/26/2024	JH
G	4946	REMOVE 'W' & ADD 'X' MATERIAL	10/27/2025	JH

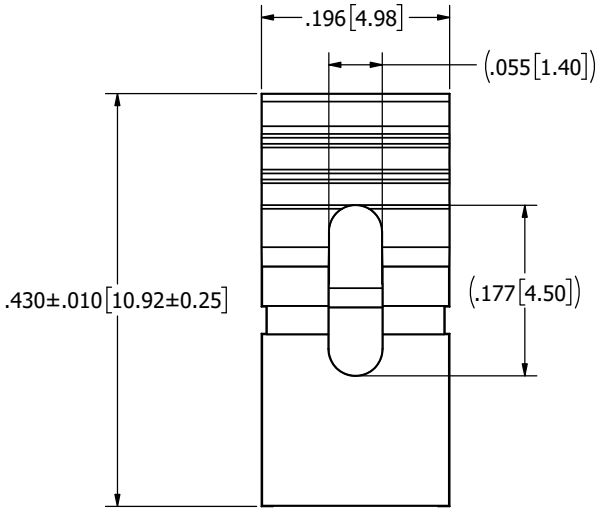

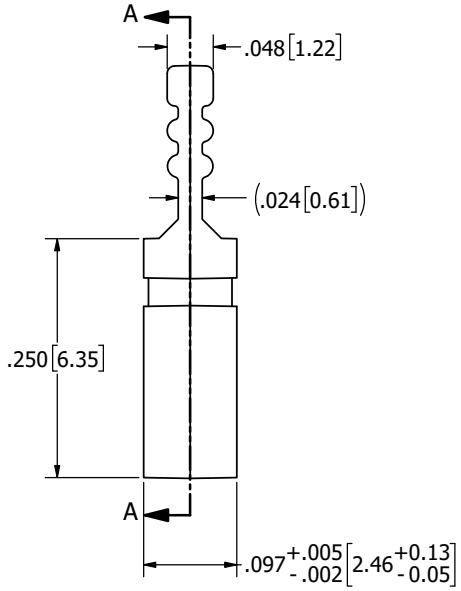

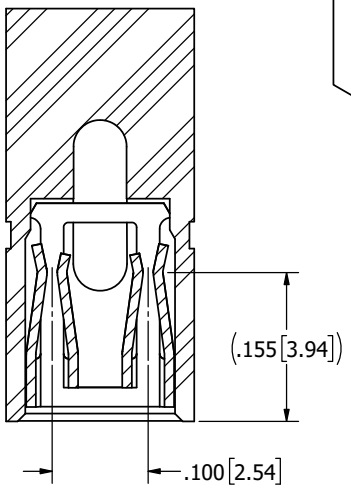

SECTION A-A

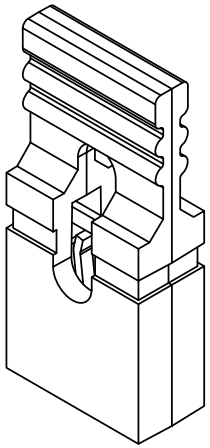

NOTES:
1. INSULATOR MATERIAL: SEE PART NUMBER CODING
2. CONTACT MATERIAL: SEE PART NUMBER CODING
3. PLATING: SEE PART NUMBER CODING
4. OPERATING TEMPERATURE: SEE PART NUMBER CODING
5. UL FLAMMABILITY RATING: 94V-0
6. CURRENT RATING: 3 AMP
7. CONTACT RESISTANCE: 30 MILLI OHMS MAX
8. INSULATION RESISTANCE: 1000 MEGA OHMS
9. DOUBLE TUNING FORK TYPE CONTACT, ACCOMMODATES .025" SQ. POST.

RoHS COMPLIANT

CUSTOMER COPY

UNLESS OTHERWISE SPECIFIED:
DIMENSIONS ARE IN INCHES [MM]

TOLERANCES:

ANGULAR: ± 1°

DECIMALS
.XX= ± .02 [.5]
.XXX= ± .005 [.13]
.XXXX= ± .0005 [.013]

DRAWN	DATE	NAME
	6/18/13	TT

THE INFORMATION HEREIN CONTAINS PROPIETARY INFORMATION OF SULLINS ELECTRONICS AND IS NOT TO BE REPRODUCED, USED OR DISCLOSED TO OTHERS FOR ANY PURPOSE EXCEPT AS SPECIFICALLY AUTHORIZED IN WRITING BY AN OFFICER OF SULLINS ELECTRONICS.

SULLINS CONNECTOR SOLUTIONS

TITLE .100" PITCH HI-TEMP SHUNT WITH HANDLE

PART NUMBER _ _C02SXNN-(S328)

SIZE	CAGE CODE	DWG. NO.	REV
C	54453	C12234	G

SCALE: 10:1 SHEET 1 OF 1

FILE NAME: C12234, _ _C02SXNN-OMIT, S328, .100 PITCH JUMPER