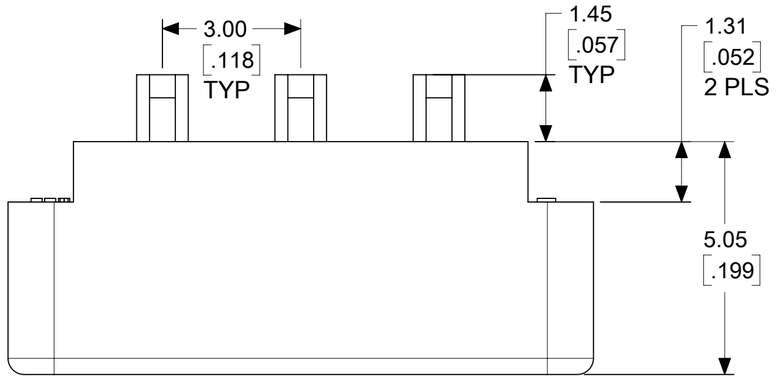

NOTES:
1) MATERIAL:
UNFILLED NYLON, RATED UL94V-0 LOW HALOGEN, COLOR: NATURAL
2) FINISH: NONE
3) PRODUCT SPECIFICATION: PS-43045
4) PACKAGING SPECIFICATION: BULK PER 1729530001-PK
5) FOR USE WITH: 172952-XX01 RECEPTACLE OR 203632-XX0X PLUG HOUSINGS. NEVER USE WITHOUT TPA.
6) THIS PART CONFORMS TO CLASS B REQUIREMENTS OF COSMETIC SPEC PS-45499-002
7) TEXT ON PART IS FOR REFERENCE ONLY. TEXT AND TEXT LOCATION MAY VARY DEPENDING ON PART NUMBER AND/OR TOOL.
8) BOW 0.38 / .015 MAX PER 25.4 / 1.00 ON SURFACE C
9) CIRCUIT SIZE INDICATES THE SIZE OF THE MATCHING DUAL-ROW HOUSING. TWO TPA STRAPS ARE REQUIRED FOR EACH HOUSING.
10) SEE SD-172952-001 (RECEPTACLE) OR 2036320000-SD (PLUG) FOR INSTALLATION INSTRUCTIONS.

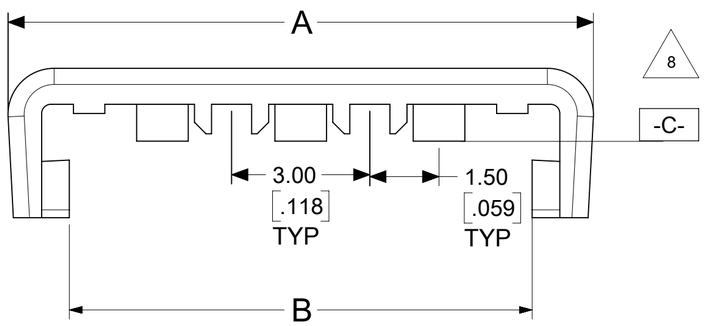

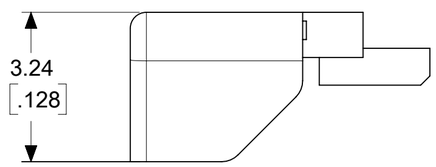

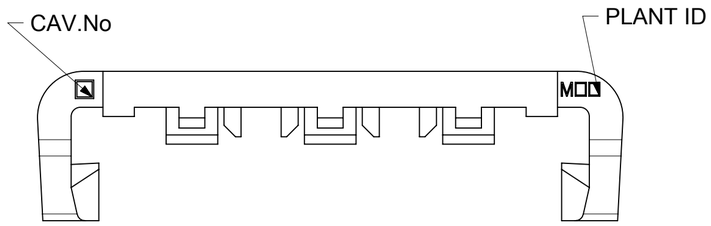

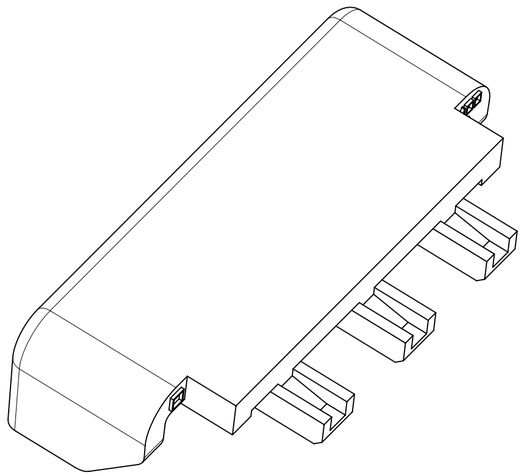

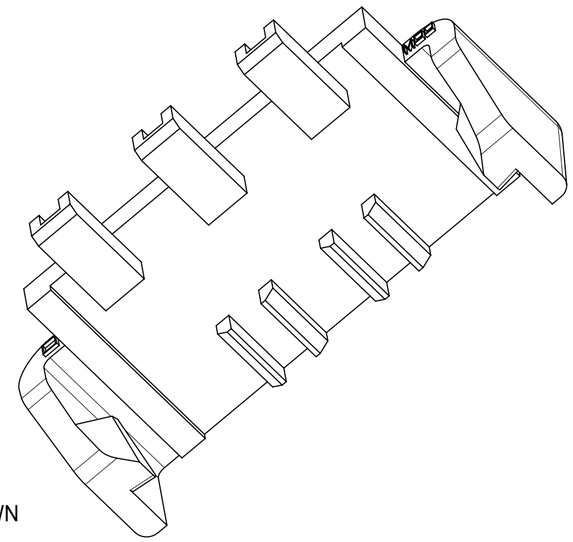

172953-06* SHOWN

24	172953-2401	39.70 / 1.563	37.05 / 1.459
22	172953-2201	36.70 / 1.445	34.05 / 1.341
20	172953-2001	33.70 / 1.327	31.05 / 1.222
18	172953-1801	30.70 / 1.209	28.05 / 1.104
16	172953-1601	27.70 / 1.091	25.05 / .986
14	172953-1401	24.70 / .973	22.05 / .868
12	172953-1201	21.70 / .854	19.05 / .750
10	172953-1001	18.70 / .736	16.05 / .632
8	172953-0801	15.70 / .618	13.05 / .514
6	172953-0601	12.70 / .500	10.05 / .396
4	172953-0401	9.70 / .382	7.05 / .278
CKT SZ. 9	PART NUMBER	DIM A ±0.51 ±.020	DIM B +0.65/-0.38 +0.026/-.015

DOCUMENT STATUS	P1	RELEASE DATE	2024/12/13 02:49:58

THIS DRAWING CONTAINS INFORMATION THAT IS PROPRIETARY TO MOLEX ELECTRONIC TECHNOLOGIES, LLC AND SHOULD NOT BE USED WITHOUT WRITTEN PERMISSION

DIMENSION UNITS	SCALE
HYBRID	NTS

GENERAL TOLERANCES (UNLESS SPECIFIED)

	MM	INCH
4 PLACES	±	±
3 PLACES	±	± 0.01
2 PLACES	± 0.25	± 0.015
1 PLACE	± 0.38	±
0 PLACES	±	±
ANGULAR TOL	± 0.5 °	

DRAFT WHERE APPLICABLE MUST REMAIN WITHIN DIMENSIONS

CURRENT REV DESC:

EC NO: 793990
DRWN: ZIXUAQ 2024/07/22
CHK'D: XQZHANG 2024/12/13
APPR: XQZHANG 2024/12/13

INITIAL REVISION:
DRWN: BANDERSON 2015/01/13
APPR: BPISZCZOR 2016/03/24

THIRD ANGLE PROJECTION | DRAWING: C-SIZE | SERIES: 172953

molex

MICRO-FIT DUAL ROW TPA STRAP
FOR RECEPTACLE AND PLUG HOUSINGS

PRODUCT CUSTOMER DRAWING

DOCUMENT NUMBER	DOC TYPE	DOC PART	REVISION
SD-172953-001	PSD	001	A4

MATERIAL NUMBER	CUSTOMER	SHEET NUMBER
SEE CHART	GENERAL MARKET	1 OF 1

FORMAT: Eng-legs-master-lb-pro3-C
REVISION: E1
DATE: 2021/05/01