May.1.2026 Copyright 2026 HIROSE ELECTRIC CO., LTD. All Rights Reserved.
In case of consideration for using Automotive equipment / device which demand high reliability, kindly contact our sales window correspondents.

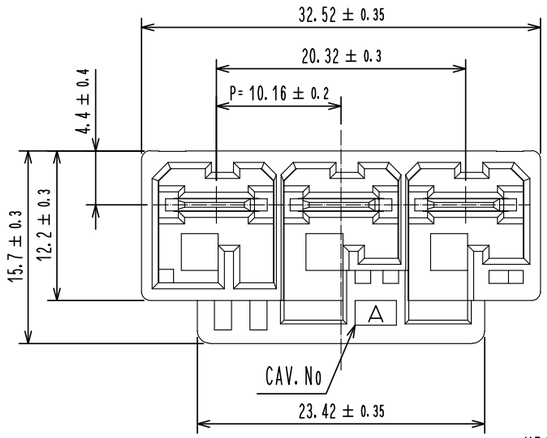


Recommended PCB Layout
( Board thickens : t=1.6±0.1mm )

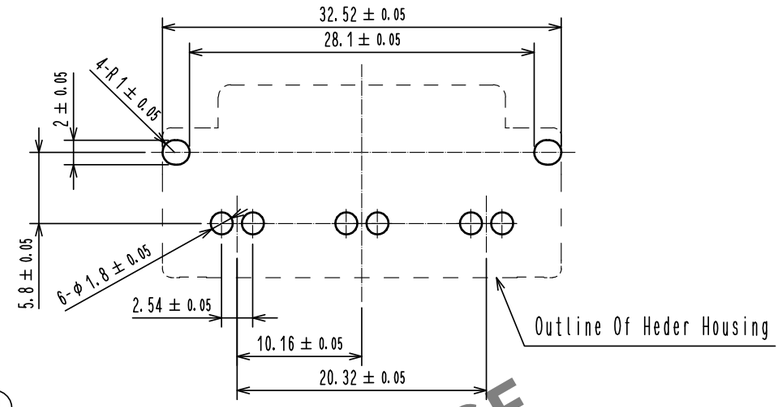


Aprication Diagram(1:1)

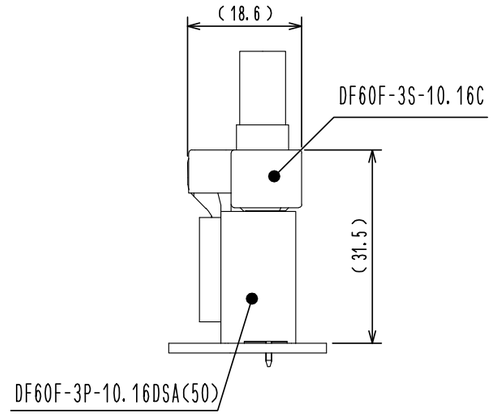


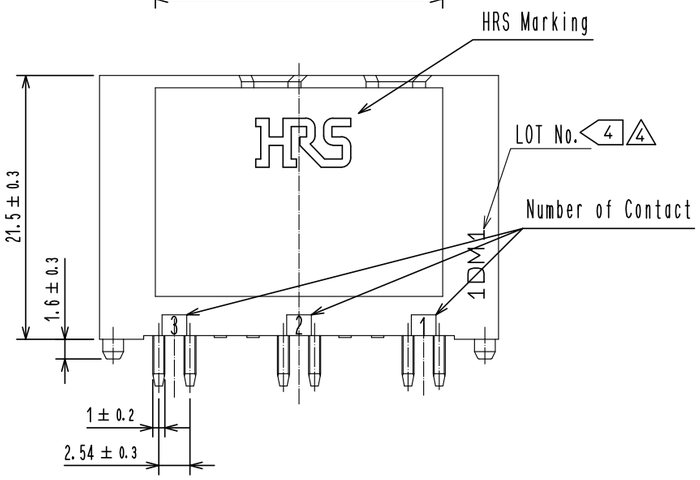


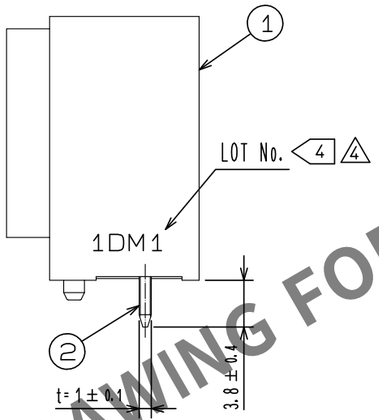


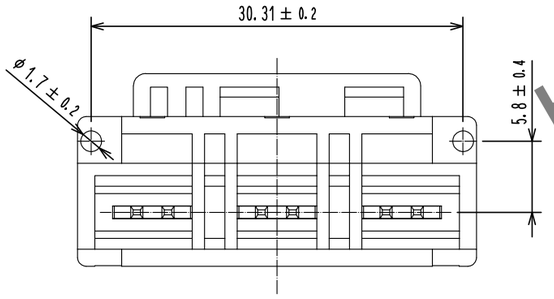


A(FREE)

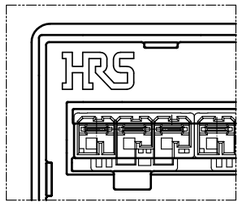


Packaging Diagram (FRRE)

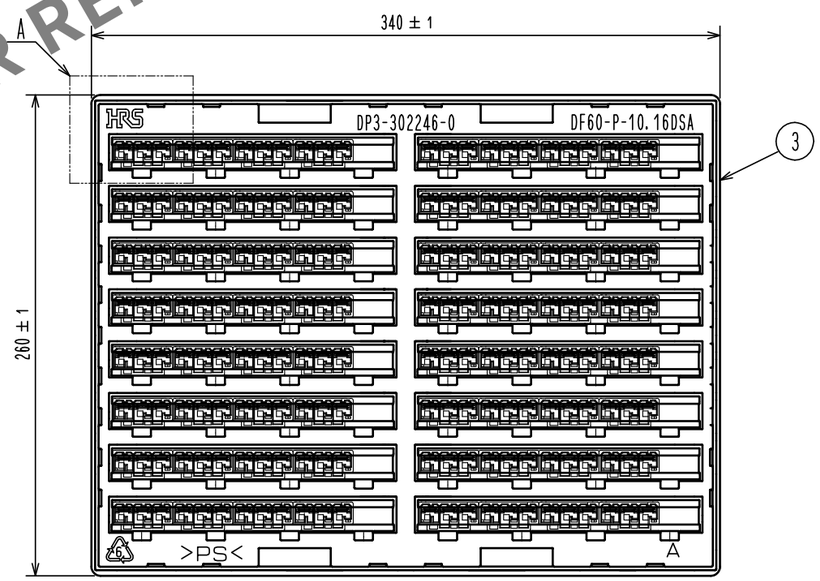


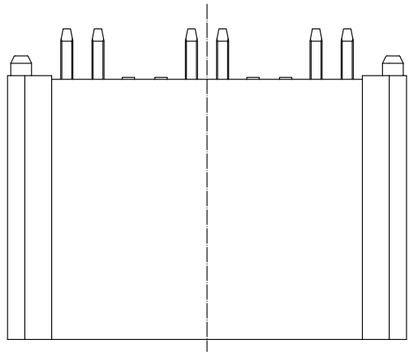

Notes 1. Per tray : 64 Pieces.
2. Refer to the technical specification (ETAP-H0816-00) for the packing type.
3. UL(File No.E52653)
C-UL(File No.E52653)
TUV ( Certificate No. R50400864 ) authorization article.

4 4 Lot No. is displayed in one of the two locations.

| NO. | MATERIAL | FINISH , REMARKS |
|---|---|---|
| 1 | PBT | Black. UL94-V0 |
| 2 | Copper Alloy | Contact Area : Au Plating 0.2μm min<br>LEAD Area : Tin Plating 1μm min<br>Under Plating : Ni Plating 1μm min |
| 3 | PS | White |

| UNITS | SCALE | COUNT | DESCRIPTION OF REVISIONS | DESIGNED | CHECKED | DATE |
|---|---|---|---|---|---|---|
| mm | 2 : 1 | 4 3 | DIS-H-00012301 | TS. MIYAKI | SZ. ONO | 20220217 |

HIROSE ELECTRIC CO., LTD.

| | | |
|---|---|---|
| APPROVED | : HS. OKAWA | 20171011 |
| CHECED | : ST. WADA | 20171011 |
| DESIGNED | : TT. OHSAKO | 20171011 |
| DRAWN | : TT. OHSAKO | 20171011 |

DRAWING NO. EDC-379270-50-00
PART NO. DF60F-3P-10.16DSA(50)
CODE NO. CL0680-4001-0-50 4 1/1

HRS DRAWING FOR REFERENCE

FORM HC0011-5-7_AN