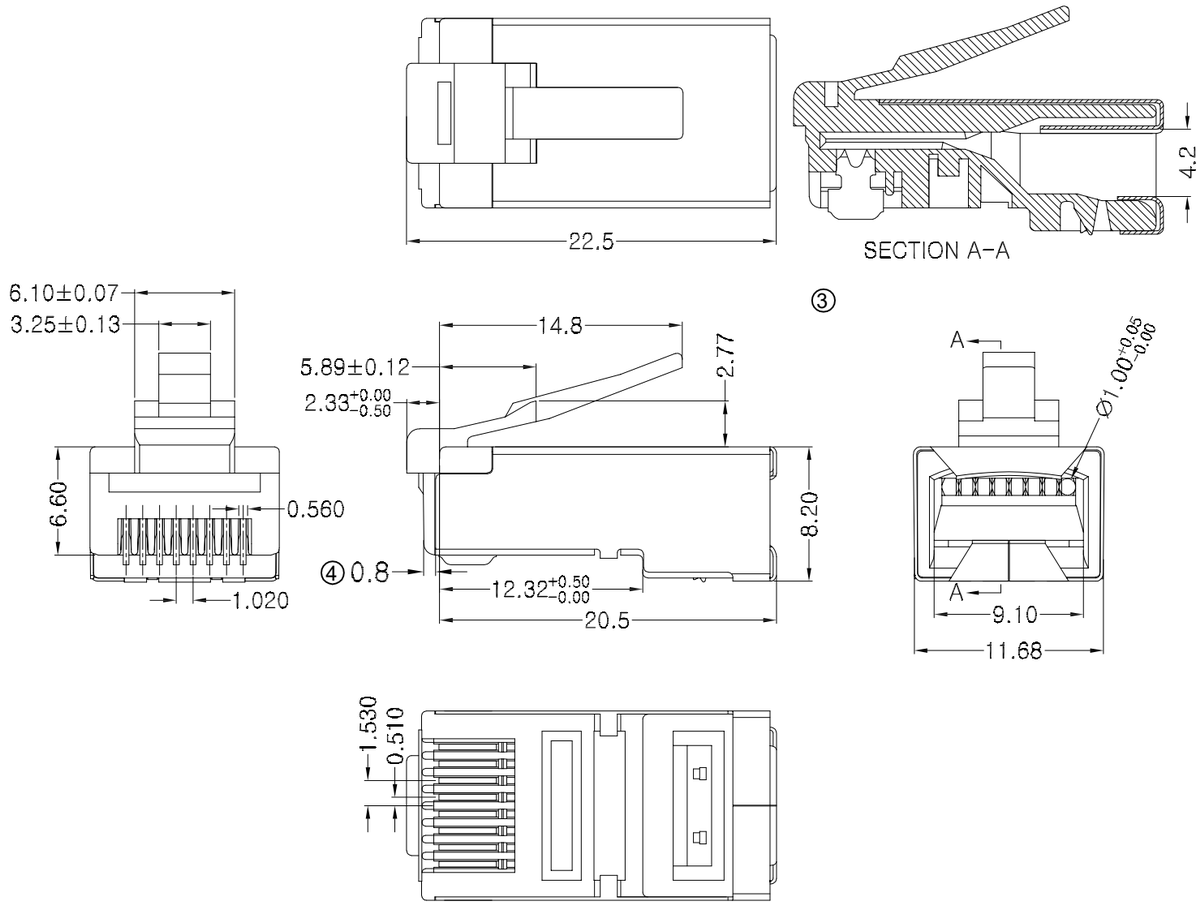

③ NOTES:

MATERIAL

Housing:	PC UL94V-2
Contact:	Brass with 2 prongs
Plating:	Gold (see Ordercode)
	50 µ" Nickel under plated
Shell:	Brass with Nickel plated 80µ"

ELECTRICAL

Current rating:	1.5A
Withstand Voltage:	1000 VAC/minute
Insulation Resistance:	500MΩ
Contact Resistance:	20mΩ max.
Tensile strength:	89N Min

ENVIRONMENTAL

Operating temp.:	-40°C to + 85°C
Durability:	750 cycles
Wire gauge:	26AWG-24AWG Stranded wire
Cable OD size:	round cable 4.5~5.5mm
Wire size:	0.95±0.05mm

Order Code: A-MO 8/8-SRS-x

- empty =Au 6u"
- GF =Au-flash
- ⑤ E=Au 30u" UL94 V-0

RoHS compliant

Unit:mm

Scale	Free
TOLERANCE	
.X	±0.20
.XX	±0.10
.XXX	±0.05
DIM	TOL
X.°	±2°
Angle	TOL

Id.	Modification	Date	Name
⑤	Add the WSW P/N	11.05.2026	Peter
④	Update the drawing	30.07.2024	Segal
③	Update drawing	14.09.2020	Luca
②	Add cable wire size information	03.04.2019	Amy
①	Update the drawing	12.06.2016	Amy
⓪	Drawn	29.04.2016	Amy

	Name	Date
Drawn	Amy	29.04.2016
Approved	Peter	11.05.2026

ASSMANN WSW components
A company of BCS

Description: Modular Connector male / 8P8C / STP

ASSMANN WSW-No.
⑤ ③ A-MO 8/8-SRS-x

Drawing-No. ASS 7232 CO

rev05

Customer-No.

SHEET 1 / 1

SV4899