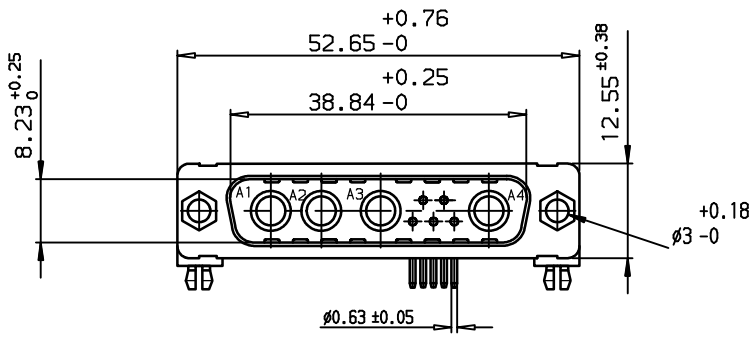

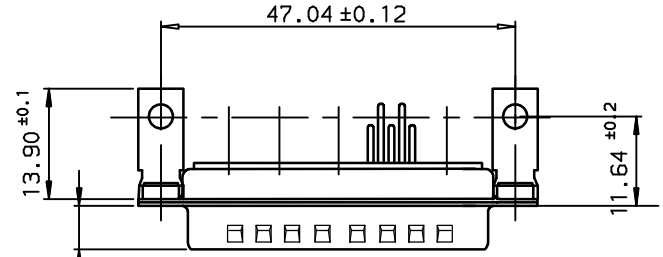

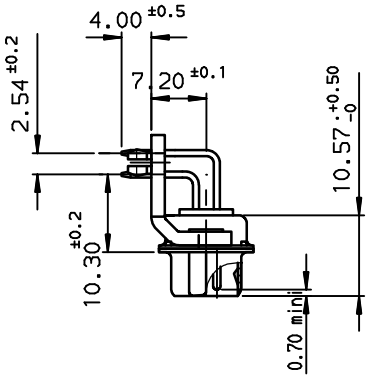

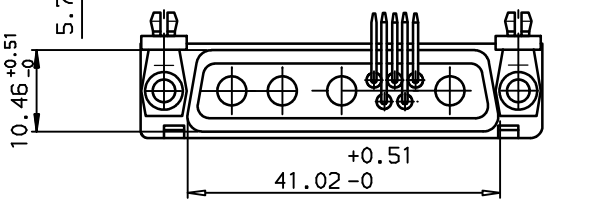

LAYOUT DIMENSIONS (after plating)

CONNECTOR SIDE VIEW

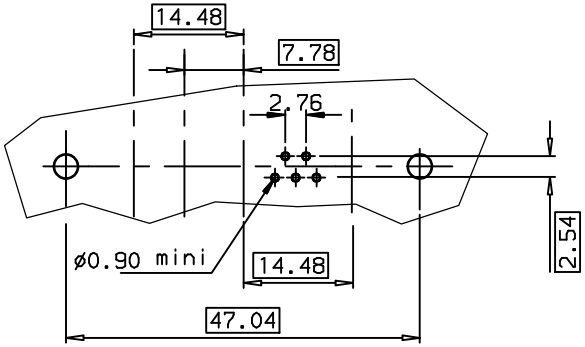

TIN LEAD PART NUMBER

DB9W4P500G00
PART NUMBER

LEAD FREE PART NUMBER

DB9W4P500G00LF
PART NUMBER

GENERAL CHARACTERISTICS AND ROHS INFORMATIONS:
SEE DRAWING C01-8639-0003

European Views

rev	ecn no	dr	date
B	-	BAR	2003/10/22
C	LS05-001	MPE	2005/03/07
D	LS06-0095	LGO	2006/07/19
-	-	-	-
-	-	-	-
-	-	-	-
-	-	-	-

www.fciconnect.com			surface ISO 1302		tolerance std ISO 406 ISO 1101	projection	mm
			TOLERANCES UNLESS OTHERWISE SPECIFIED				
Dr	JOUBERT	1996/08/27	ANGULAR	LINEAR	0.X ±0.1	size A3	Scale 1.5
Eng	PESSON	1996/08/27			0.XX ±0.1		
Chr	LEGARE	1996/08/27	0.XX° ±2°		0.XXX ±0.1	ECN	LS06-0095
Appr	LEGARE	1996/08/27	Product family		D-SUB	Spec ref	-
title	PIN CONNECTOR RIGHT ANGLED					dwg no	C01-8639-0491
	-					Rev.	D
catalog no	-					CUSTOMER	sheet 1 of 1

REV F - 2006-04-17

Copyright FCI.

PDM:Rev:D STATUS:Released Printed: Sep 13, 2006
PDM:Rev:D STATUS:Released Printed: Mar 16, 2023