THIS DRAWING IS UNPUBLISHED. RELEASED FOR PUBLICATION -,- .
© COPYRIGHT - By - ALL RIGHTS RESERVED.

LOC	DIST
GP	00

REVISIONS

P	LTR	DESCRIPTION	DATE	DWN	APVD
	K1	REVISED PER ECO-11-004835	11MAR11	RK	HMR

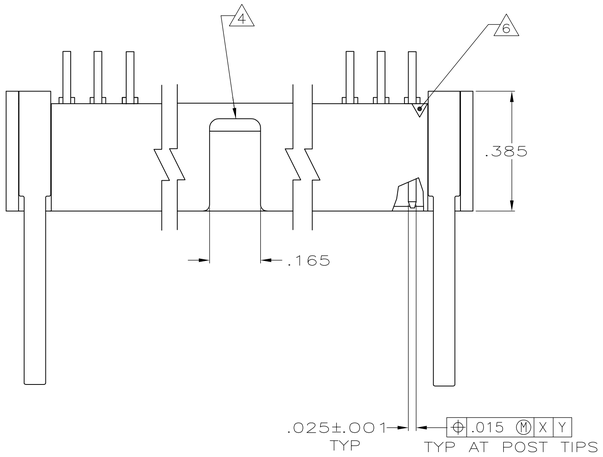

1. THE NOTED DIMENSIONS APPLY AT THE INTERSECTION OF THE POST AND HOUSING
2. POSTS: GOLD FLASH OVER PALLADIUM-NICKEL PLATE, .000030 MIN TOTAL ON THE MATING SUFACES, .000100 MIN TIN-LEAD PLATE ON THE SOLDER-TAILS, .000050 MIN NICKEL UNDERPLATE ON THE ENTIRE POST.
   -OR-
   .000030 MIN GOLD PLATE ON THE MATING SURFACES, .000100 MIN TIN-LEAD PLATE ON THE SOLDER-TAILS, .000050 MIN NICKEL UNDERPLATE ON THE ENTIRE POST.
3. DOUBLE BAR POLARIZATION
4. CENTER POLARIZATION SLOT
5. FOR 10 POSN ASSEMBLY, SLOT OMITTED WHERE INDICATED
6. NUMBER 1 POSITION INDICATOR.
7. OPTIONAL AMP IDENTIFICATION NUMBER (DATE CODE). LOCATION APPROXIMATELY WHERE SHOWN.

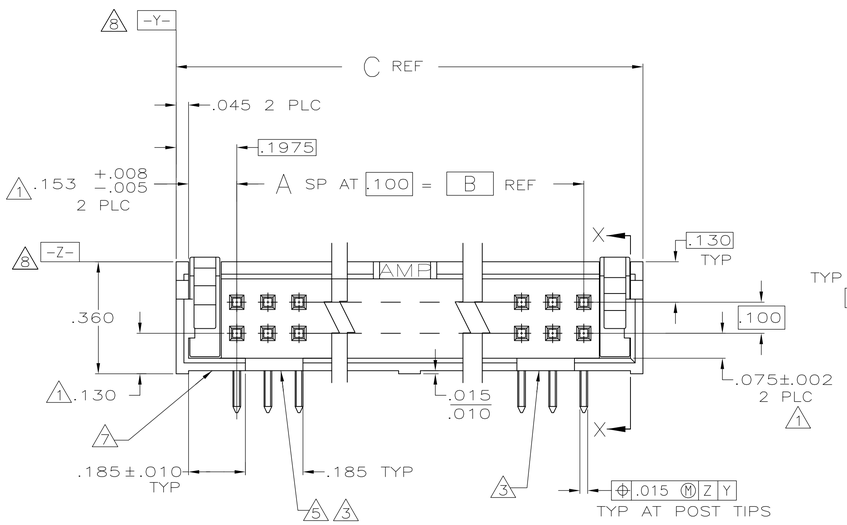

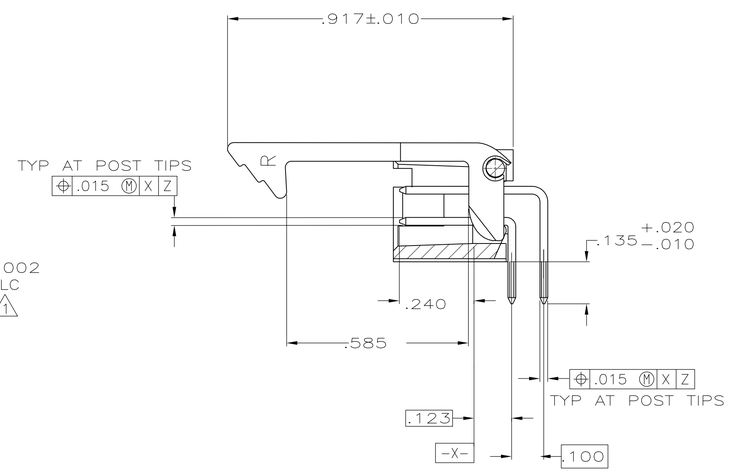

SECTION X-X

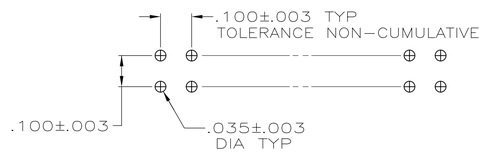

RECOMMENDED HOLE LAYOUT
FOR MANUAL INSERTION

OBSOLETE	3.300	2.900	29	60	1-104130-0
OBSOLETE	2.800	2.400	24	50	104130-9
OBSOLETE	2.500	2.100	21	44	104130-8
OBSOLETE	2.300	1.900	19	40	104130-7
OBSOLETE	2.000	1.600	16	34	104130-6
	1.600	1.200	12	26	104130-5
	1.300	.900	9	20	104130-4
	1.100	.700	7	16	104130-3
	1.000	.600	6	14	104130-2
	.800	.400	4	10	104130-1
	C	B	A	NO OF POSN	ASSEMBLY PART NUMBER

THIS DRAWING IS A CONTROLLED DOCUMENT.

DIMENSIONS: INCHES

TOLERANCES UNLESS OTHERWISE SPECIFIED:
0 PLC ± -
1 PLC ± -
2 PLC ± -
3 PLC ± .005
4 PLC ± -
ANGLES ± -

MATERIAL: HOUSING: GLASS FILLED NYLON, FLAME RETARDANT, BLACK
POSTS: BRASS

FINISH: 2

DWN H MOLL 2-26-87
CHK T. CLARK 3-10-87
APVD R. FLICKER 3-10-87
PRODUCT SPEC 108-40018
APPLICATION SPEC —
WEIGHT —

TE Connectivity

NAME: HEADER ASSY, LOW PROFILE, AMP-LATCH

SIZE A1 | CAGE CODE 00779 | DRAWING NO C-104130 | RESTRICTED TO —

CUSTOMER DRAWING | SCALE 4:1 | SHEET 1 OF 1 | REV K1

4805 (3/11)