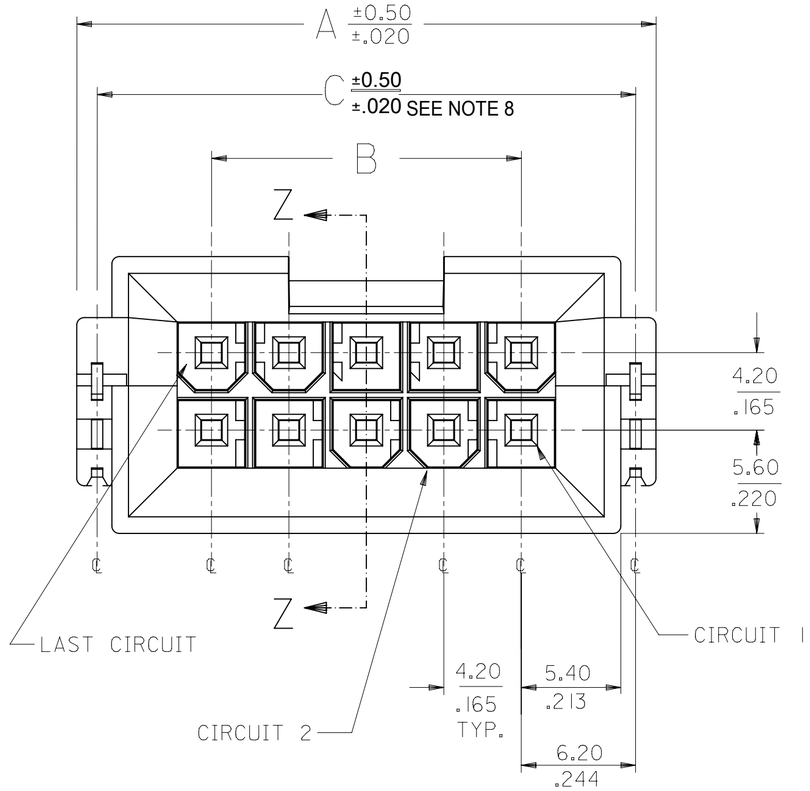

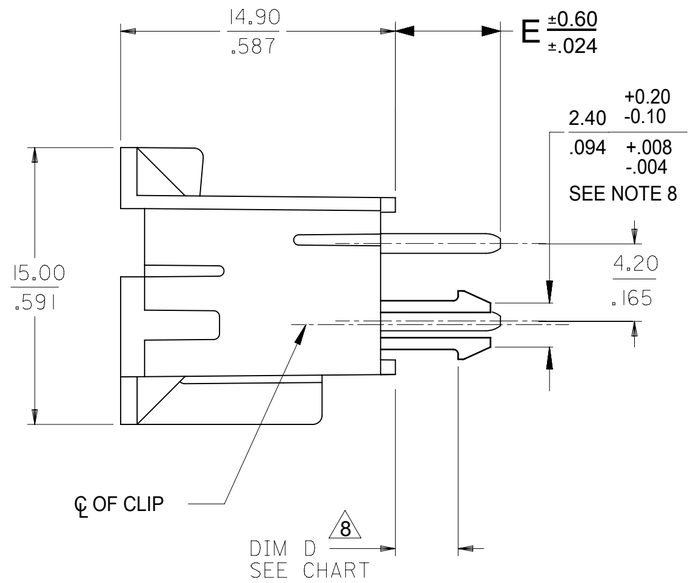

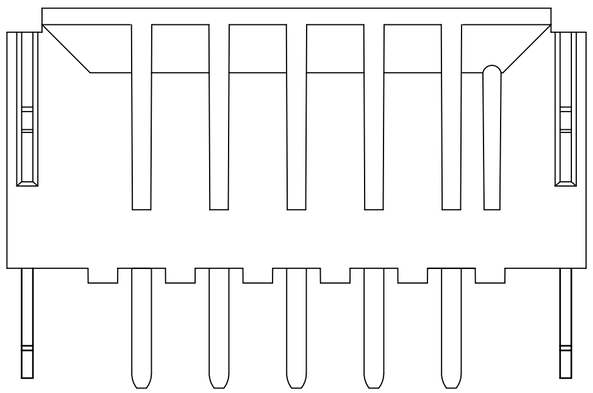

1) MATERIALS:
   HOUSING: PA46 FILLED, UL94V-0, COLOR: BLACK
   TERMINAL: BRASS
   BOARD RETENTION CLIP: BRASS
2) FINISHES:
   TERMINAL:
   1 = (0.00254)/.000100 MIN. BRIGHT TIN OVER (0.00127)/.000050 MIN. NICKEL
   2 = (0.00076)/.000030 MIN. SELECT GOLD AND (0.00254)/.000100 MIN. SELECT MATTE TIN OVER (0.00127)/.000050 MIN. NICKEL OVERALL
   MOUNTING CLIP:
   (0.00254)/.000100 MIN. MATTE TIN OVER (0.00127)/.000050 MIN. NICKEL
3) PRODUCT SPECIFICATIONS: PS-43810-001
4) PACKAGING SPECIFICATIONS: PK-43879-001
5) PART MATES WITH MOLEX RECEPTACLE SERIES 5557, 42474 AND 44516 AND HEADER SERIES 42385.
6) PART ALLOWS FOR 1.27/.050 MAX. MISALIGNMENT WITH MATING HOUSINGS IN ANY DIRECTION.
7) CONNECTOR ASSEMBLIES ARE NOT TO BE MATED AND UNMATED WHILE CIRCUITS ARE LIVE.
8) THIS DIMENSION DOES NOT APPLY TO PARTS WITHOUT P.C. BOARD RETENTION CLIPS.
9) PARTS CONFORM TO CLASS 'B' REQUIREMENTS OF COSMETIC SPECIFICATION PS-45499-002
10) DISCOLORATION IN THE BANDOLIER CARRIER AREA OF THE PIN IS INHERENT TO THE PLATING PROCESS AND IS DUE TO THE MASKING EFFECT OF THE CARRIER. THIS DISCOLORATION IS IN A NON-FUNCTIONAL AREA OF THE PIN AND WILL NOT AFFECT THE PERFORMANCE OF THE HEADER ASSEMBLY.
11) PARTS ARE NOT DESIGNED FOR CURRENT SHARING.
12) TEXT ON PART IS FOR REFERENCE ONLY. TEXT AND TEXT LOCATION MAY VARY DEPENDING ON PART NUMBER AND/OR TOOL.

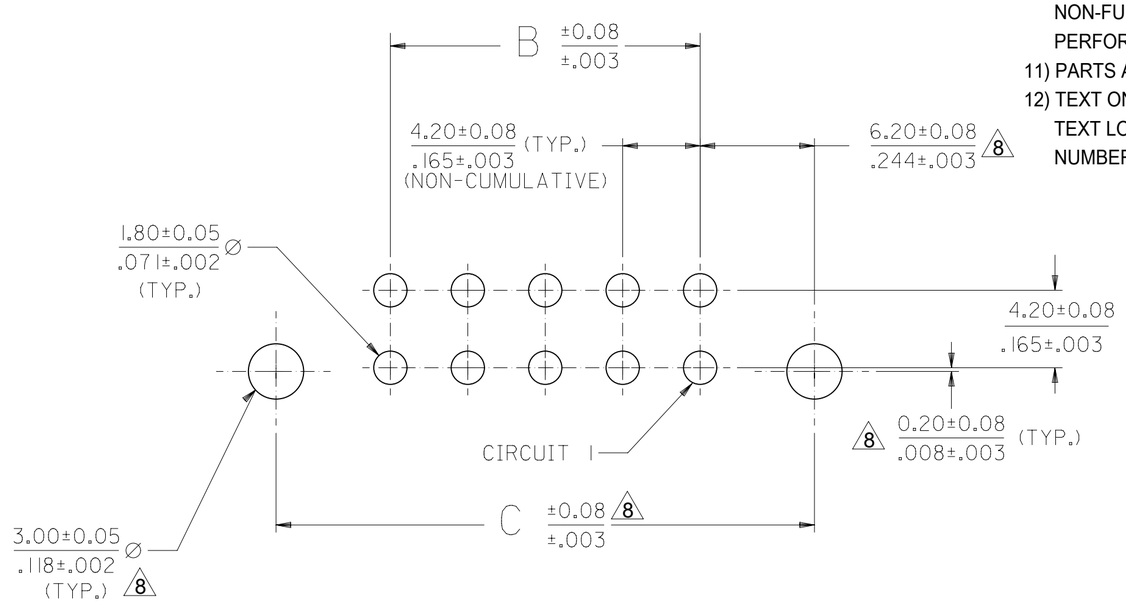

PCB LAYOUT: COMPONENT SIDE

RECOMMENDED PCB THICKNESS: SEE CHART

CKTS	DIM. "A"	DIM. "B"	DIM. "C"
4	18.81 / .740	4.20 / .165	16.60 / .653
6	23.01 / .906	8.40 / .331	20.80 / .819
8	27.21 / 1.071	12.60 / .496	25.00 / .984
10	31.41 / 1.237	16.80 / .661	29.20 / 1.150
12	35.61 / 1.402	21.00 / .828	33.40 / 1.315
14	39.81 / 1.567	25.20 / .992	37.60 / 1.480
16	44.01 / 1.733	29.40 / 1.157	41.80 / 1.646
18	48.21 / 1.898	33.60 / 1.323	46.00 / 1.811
20	52.41 / 2.063	37.80 / 1.488	50.20 / 1.976
22	56.61 / 2.229	42.00 / 1.654	54.40 / 2.142
24	60.81 / 2.394	46.20 / 1.819	58.60 / 2.307

DOCUMENT STATUS	P1	RELEASE DATE	2024/02/19 02:27:15

THIS DRAWING CONTAINS INFORMATION THAT IS PROPRIETARY TO MOLEX ELECTRONIC TECHNOLOGIES, LLC AND SHOULD NOT BE USED WITHOUT WRITTEN PERMISSION

FUNCTIONAL SYMBOLS: FA = 0, FC = 0, FP = 0
DIVISIONAL SYMBOLS

DIMENSION UNITS: IN/MM
SCALE: 4:1

GENERAL TOLERANCES (UNLESS SPECIFIED)

	MM	INCH
4 PLACES	±	±
3 PLACES	±	± 0.01
2 PLACES	± 0.25	± 0.014
1 PLACE	± 0.35	±
0 PLACES	±	±
ANGULAR TOL	± 0.5 °	

DRAFT WHERE APPLICABLE MUST REMAIN WITHIN DIMENSIONS

CURRENT REV DESC:

EC NO: 776284
DRWN: JERRYW8 2024/02/06
CHK'D: XQZHANG 2024/02/19
APPR: XQZHANG 2024/02/19

INITIAL REVISION:
DRWN: MANLAPAZ 1997/12/04
APPR: FSMITH 2012/02/02

THIRD ANGLE PROJECTION | DRAWING: C-SIZE | SERIES: 44068

molex

MINI-FIT JR BMI SMC
VERTICAL HEADER ASM VARIOUS BOARD THICKNESS

PRODUCT CUSTOMER DRAWING

DOCUMENT NUMBER	DOC TYPE	DOC PART	REVISION
SD-44068-031	PSD	000	G3

MATERIAL NUMBER	CUSTOMER	SHEET NUMBER
GENERAL MARKET	GENERAL MARKET	1 OF 2

FORMAT: Eng-tega-master-lb-prod-C
REVISION: E1
DATE: 2021/05/01

FINISH:	1 (SEE NOTE 2)
DIM. D:	WITHOUT CLIP
DIM. E:	(3.30) / .130
PCB THICKNESS:	(1.60±0.18) / .063±.007

CIRCUITS	MATERIAL NO.
04	44068-0023
06	44068-0024
08	44068-0025
10	44068-0026
12	X 44068-0027
14	44068-0028
16	X 44068-0029
18	44068-0030
20	X 44068-0031
22	X 44068-0032
24	44068-0033

FINISH:	1 (SEE NOTE 2)
DIM. D:	(1.79±0.25) / .070±.010
DIM. E:	(3.30) / .130
PCB THICKNESS:	(1.60±0.18) / .063±.007

CIRCUITS	MATERIAL NO.
04	44068-0001
06	44068-0002
08	44068-0003
10	44068-0004
12	X 44068-0005
14	44068-0006
16	X 44068-0007
18	44068-0008
20	X 44068-0009
22	X 44068-0010
24	44068-0011

FINISH:	1 (SEE NOTE 2)
DIM. D:	(2.60±0.25) / .102±.010
DIM. E:	(4.50) / .177
PCB THICKNESS:	(2.39±0.18) / .094±.007

CIRCUITS	MATERIAL NO.
04	44068-0045
06	44068-0046
08	44068-0047
10	44068-0048
12	X 44068-0049
14	44068-0050
16	X 44068-0051
18	44068-0052
20	X 44068-0053
22	X 44068-0054
24	44068-0055

FINISH:	1 (SEE NOTE 2)
DIM. D:	(3.39±0.25) / .133±.010
DIM. E:	(4.90) / .193
PCB THICKNESS:	(3.18±0.18) / .125±.007

CIRCUITS	MATERIAL NO.
04	44068-0089
06	44068-0090
08	44068-0091
10	44068-0092
12	X 44068-0093
14	44068-0094
16	X 44068-0095
18	44068-0096
20	X 44068-0097
22	X 44068-0098
24	44068-0099

FINISH:	2 (SEE NOTE 2)
DIM. D:	WITHOUT CLIP
DIM. E:	(3.30) / .130
PCB THICKNESS:	(1.60±0.18) / .063±.007

CIRCUITS	MATERIAL NO.
04	44068-0034
06	44068-0035
08	44068-0036
10	44068-0037
12	X 44068-0038
14	44068-0039
16	X 44068-0040
18	44068-0041
20	X 44068-0042
22	X 44068-0043
24	44068-0044

FINISH:	2 (SEE NOTE 2)
DIM. D:	(1.79±0.25) / .070±.010
DIM. E:	(3.30) / .130
PCB THICKNESS:	(1.60±0.18) / .063±.007

CIRCUITS	MATERIAL NO.
04	44068-0012
06	44068-0013
08	44068-0014
10	44068-0015
12	X 44068-0016
14	44068-0017
16	X 44068-0018
18	44068-0019
20	X 44068-0020
22	X 44068-0021
24	44068-0022

FINISH:	2 (SEE NOTE 2)
DIM. D:	(2.60±0.25) / .102±.010
DIM. E:	(4.50) / .177
PCB THICKNESS:	(2.39±0.18) / .094±.007

CIRCUITS	MATERIAL NO.
04	44068-0056
06	44068-0057
08	44068-0058
10	44068-0059
12	X 44068-0060
14	44068-0061
16	X 44068-0062
18	44068-0063
20	X 44068-0064
22	X 44068-0065
24	44068-0066

FINISH:	2 (SEE NOTE 2)
DIM. D:	(3.39±0.25) / .133±.010
DIM. E:	(4.90) / .193
PCB THICKNESS:	(3.18±0.18) / .125±.007

CIRCUITS	MATERIAL NO.
04	44068-0100
06	44068-0101
08	44068-0102
10	44068-0103
12	X 44068-0104
14	44068-0105
16	X 44068-0106
18	44068-0107
20	X 44068-0108
22	X 44068-0109
24	44068-0110

X PRECEDING PART NUMBER DESIGNATES
CIRCUIT SIZE IS NOT TOOLED
PLEASE CONTACT FACTORY

DOCUMENT STATUS	P1	RELEASE DATE	2024/02/19 02:27:15

FORMAT: Eng-tega-master-lb-prod-C
REVISION: E1
DATE: 2021/05/01

FUNCTIONAL SYMBOLS
FA = 0
FC = 0
FP = 0
DIVISIONAL SYMBOLS

THIS DRAWING CONTAINS INFORMATION THAT IS PROPRIETARY TO MOLEX ELECTRONIC TECHNOLOGIES, LLC AND SHOULD NOT BE USED WITHOUT WRITTEN PERMISSION

DIMENSION UNITS: IN/MM
SCALE: 1:1

GENERAL TOLERANCES (UNLESS SPECIFIED)

	MM	INCH
4 PLACES	±	±
3 PLACES	±	± 0.01
2 PLACES	± 0.25	± 0.014
1 PLACE	± 0.35	±
0 PLACES	±	±
ANGULAR TOL	± 0.5 °	

DRAFT WHERE APPLICABLE MUST REMAIN WITHIN DIMENSIONS

CURRENT REV DESC:

EC NO: 776284
DRWN: JERRYW8 2024/02/06
CHK'D: XQZHANG 2024/02/19
APPR: XQZHANG 2024/02/19

INITIAL REVISION:
DRWN: MANLAPAZ 1997/12/04
APPR: FSMITH 2012/02/02

THIRD ANGLE PROJECTION | DRAWING: C-SIZE | SERIES: 44068

molex

MINI-FIT JR BMI SMC
VERTICAL HEADER ASM VARIOUS BOARD THICKNESS

PRODUCT CUSTOMER DRAWING

DOCUMENT NUMBER	DOC TYPE	DOC PART	REVISION
SD-44068-031	PSD	000	G3

MATERIAL NUMBER	CUSTOMER	SHEET NUMBER
GENERAL MARKET	GENERAL MARKET	2 OF 2