FEATURES SELECTION GUIDE

CIRCUIT SIZE	FEATURES				
	FRICTION LOCKS		③ DUAL SIDE SLOTS	④ CENTER POLARIZATION	SHEET NO
	① DUAL	② CENTER			
4 TO 6	N.A	N.A	YES	N.A	2 - 3
	N.A	YES	YES	N.A	
8 TO 12	N.A	N.A	YES	YES	4 - 5
	N.A	YES	YES	N.A	
14 TO 50	YES	N.A	YES	YES	6 - 9
	N.A	N.A	YES	YES	

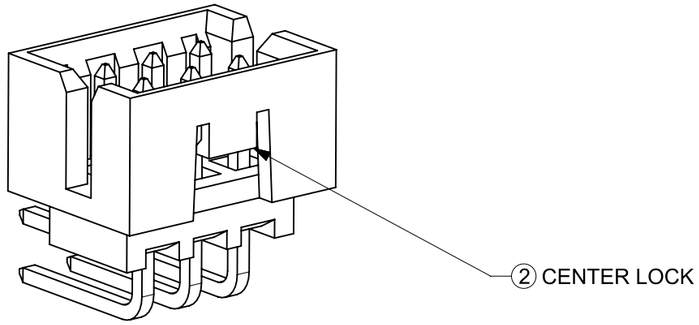

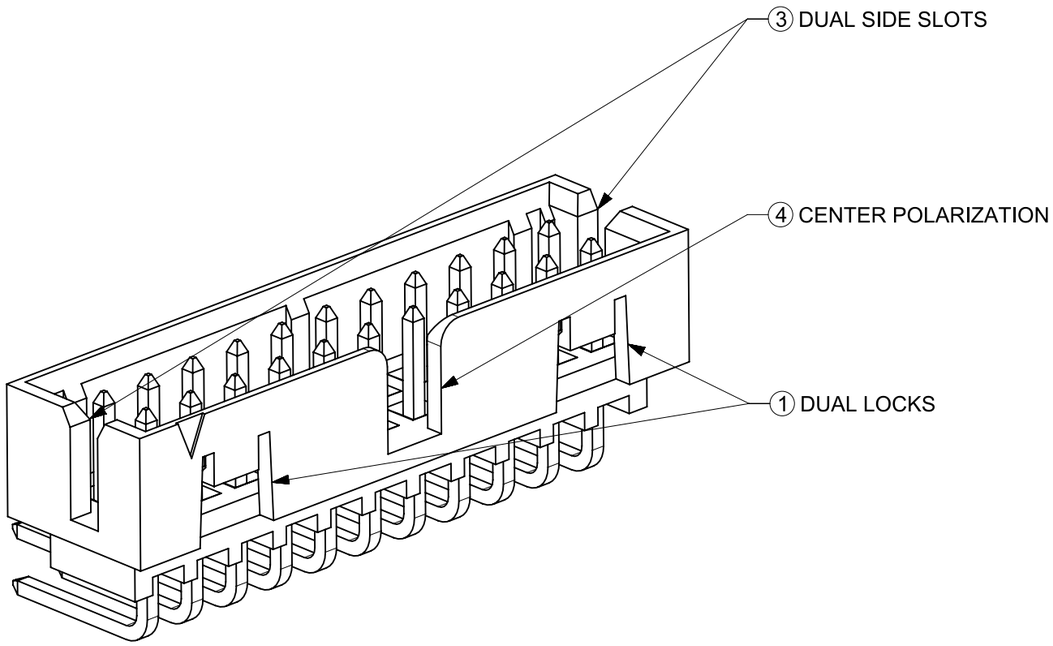

PACKAGING SPECIFICATION TABLE

TAPE AND REEL PACKAGING	PK-87831-300
TUBE STANDARD PACKAGING	PK-87831-001
TUBE NON-STANDARD PACKAGING FOR: 87833-0861 87833-1420	PK-87831-002

THIS DRAWING CONTAINS INFORMATION THAT IS PROPRIETARY TO MOLEX ELECTRONIC TECHNOLOGIES, LLC AND SHOULD NOT BE USED WITHOUT WRITTEN PERMISSION

FUNCTIONAL SYMBOLS: FA = 0, FC = 0, FP = 0

DIVISIONAL SYMBOLS

DIMENSION UNITS	SCALE
mm	5:1

GENERAL TOLERANCES (UNLESS SPECIFIED)	
ANGULAR TOL	± 3°
4 PLACES	±
3 PLACES	±
2 PLACES	± 0.200
1 PLACE	±
0 PLACES	±

DRAFT WHERE APPLICABLE MUST REMAIN WITHIN DIMENSIONS

CURRENT REV DESC: Adding New Part Numbers

STATUS: Production
DRWN: Meghraj Boodagatti 2026-06-03
CHK'D: Meghraj Boodagatti 2026-06-10
APPR: Saravanakumar Murugesan 2026-06-10

THIRD ANGLE PROJECTION | DRAWING: A3-SIZE | SERIES: 87833

molex

MILLIGRID, 2MM PITCH
SHROUDED HEADER R/A, THROUGH HOLE

PRODUCT CUSTOMER DRAWING

DOCUMENT NUMBER	DOC TYPE	DOC PART	REVISION
SD-87833-0001	PSD	001	A15

MATERIAL NUMBER	CUSTOMER	SHEET NUMBER
SEE TABLE	GENERAL MARKET	1 OF 9

FORMAT: TC-4b-prod-A3
REVISION: B
DATE: 2022/08/01

4 TO 6 CIRCUITS

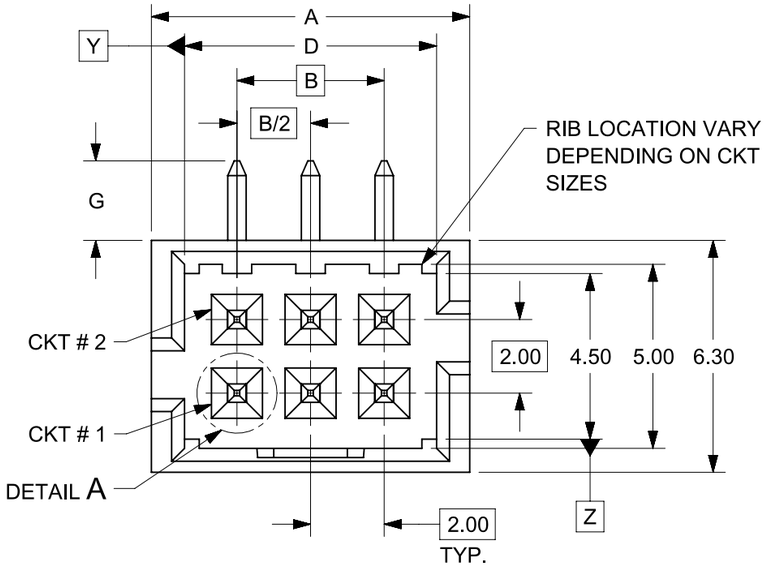

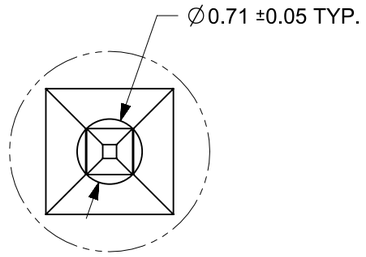

DETAIL A

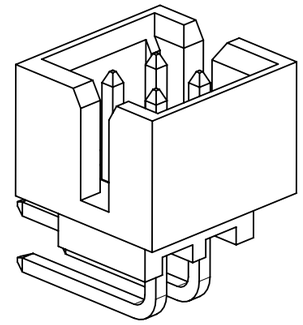

ISO VIEW OF HEADER DUAL SIDE SLOTS

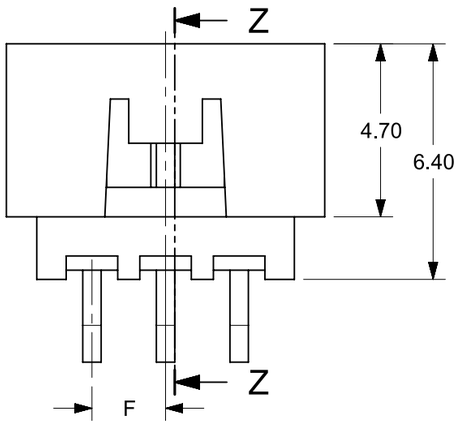

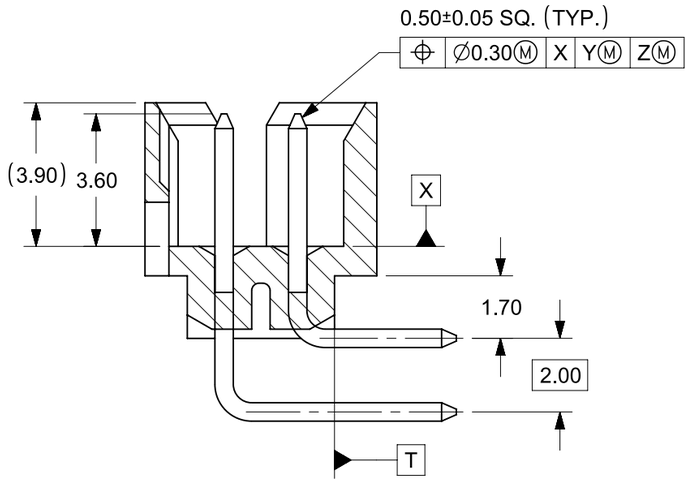

SECTION Z-Z

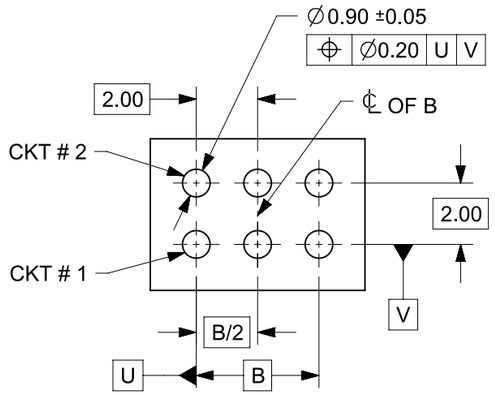

RECOMMENDED PCB LAYOUT

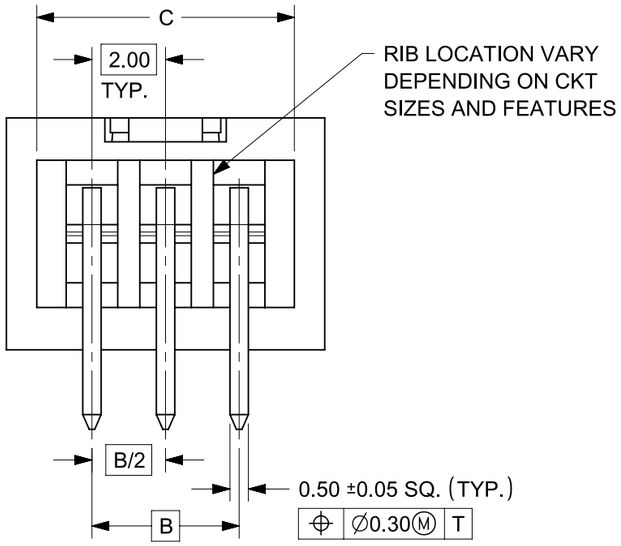

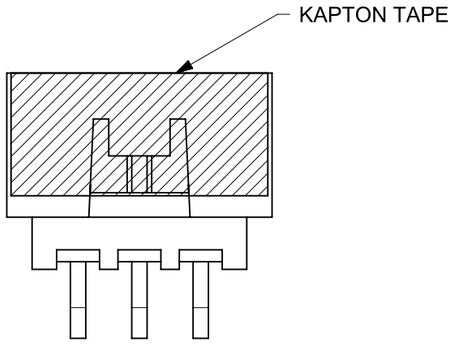

NOTES:
1. MATERIALS:
   HOUSING: 30% GF, NYLON, UL94V-0, COLOR: BLACK.
   PIN: 0.50mm SQ. PHOSPHOR BRONZE.
2. FINISHES: REFER TO PLATING OPTIONS.
3. PRODUCT SPECIFICATION: PS-87831-027
4. PACKAGING SPECIFICATION: SEE PACKAGING SPECS TABLE ON SHEET 1
5. MATES WITH: A. MOLEX CRIMP RECEPTACLE HOUSING: 51110 SERIES AND CRIMP TERMINAL: 50394 SERIES.
   B. MOLEX 2MM MILLIGRID DUAL ROW IDT: 87568 SERIES.
   C. MOLEX 2MM MILLIGRID DUAL ROW RECEPTACLE: 79107 (GOLD PLATED), 78787 (TIN PLATED)
6. FOR ILLUSTRATION PURPOSE, 6 CIRCUITS HEADER IS SHOWN.

THIS DRAWING CONTAINS INFORMATION THAT IS PROPRIETARY TO MOLEX ELECTRONIC TECHNOLOGIES, LLC AND SHOULD NOT BE USED WITHOUT WRITTEN PERMISSION

FUNCTIONAL SYMBOLS	DIMENSION UNITS: mm	SCALE: 5:1	CURRENT REV DESC: Adding New Part Numbers
FA = 0	GENERAL TOLERANCES (UNLESS SPECIFIED)		
FC = 0	ANGULAR TOL ± 3°		
FP = 0	4 PLACES ±		
DIVISIONAL SYMBOLS	3 PLACES ±		
	2 PLACES ± 0.200		STATUS: Production
	1 PLACE ±		DRWN: Meghraj Boodagatti 2026-06-03
	0 PLACES ±		CHK'D: Meghraj Boodagatti 2026-06-10
	DRAFT WHERE APPLICABLE MUST REMAIN WITHIN DIMENSIONS		APPR: Saravanakumar Murugesan 2026-06-10

THIRD ANGLE PROJECTION | DRAWING: A3-SIZE | SERIES: 87833

molex

MILLIGRID, 2MM PITCH
SHROUDED HEADER R/A, THROUGH HOLE

PRODUCT CUSTOMER DRAWING

DOCUMENT NUMBER	DOC TYPE	DOC PART	REVISION
SD-87833-0001	PSD	001	A15

MATERIAL NUMBER	CUSTOMER	SHEET NUMBER
SEE TABLE	GENERAL MARKET	2 OF 9

4 TO 6 CIRCUITS

CKT SIZE	ASSY. P/N WITHOUT KAPTON IN TUBE	ASSY. P/N WITH KAPTON IN TUBE	ASSY. P/N WITH KAPTON IN T&R	PLATING OPTIONS	FRICTION LOCKS		DUAL SIDE SLOTS	CENTER POLARIZATION	DIMENSION						
					DUAL	CENTER			A	B	C	D	E	F	G (SOLDER TAIL)
4	87833-0419	N.A	N.A	1	N.A	N.A	YES	N.A	6.65	2.00	5.00	4.85	N.A	N.A	2.16
	87833-0420	N.A	N.A	2											
	87833-0421	N.A	N.A	3											
	87833-5920	N.A	N.A	2	N.A	N.A	YES	N.A						N.A	3.18
	87833-0431	87833-0441	87833-0451	2	N.A	YES	YES	N.A						1.00	2.16
	87833-0432	N.A	N.A	3											
	87833-0461	N.A	N.A	2	N.A	YES	YES	N.A						1.00	3.18
6	87833-0619	N.A	N.A	1	N.A	N.A	YES	N.A	8.65	4.00	7.00	6.85	N.A	N.A	2.16
	87833-0620	N.A	87833-0626	2											
	87833-0621	N.A	N.A	3											
	87833-6420	N.A	N.A	2	N.A	N.A	YES	N.A						N.A	3.18
	87833-0631	87833-0641	87833-0651	2	N.A	YES	YES	N.A						2.00	2.16
	87833-0632	N.A	N.A	3											
	87833-0661	N.A	N.A	2	N.A	YES	YES	N.A						2.00	3.18
	87833-0624	N.A	N.A	2	N.A	N.A	YES	N.A						N.A	2.92
	87833-0625	N.A	N.A	3											

PLATING OPTIONS:

1 - 0.05-0.13µm/2-5µin GOLD IN CONTACT AREA AND 1.88µm/75µin MIN. MATTE TIN IN SOLDER TAIL AREA OVER 1.27µm/50µin MIN. NICKEL OVERALL.

2 - 0.38µm/15µin MIN. GOLD IN CONTACT AREA AND 1.88µm/75µin MIN. MATTE TIN IN SOLDER TAIL AREA OVER 1.27µm/50µin MIN. NICKEL OVERALL.

3 - 0.76µm/30µin MIN. GOLD IN CONTACT AREA AND 1.88µm/75µin MIN. MATTE TIN IN SOLDER TAIL AREA OVER 1.27µm/50µin MIN. NICKEL OVERALL.

THIS DRAWING CONTAINS INFORMATION THAT IS PROPRIETARY TO MOLEX ELECTRONIC TECHNOLOGIES, LLC AND SHOULD NOT BE USED WITHOUT WRITTEN PERMISSION

FUNCTIONAL SYMBOLS: FA = 0, FC = 0, FP = 0

DIVISIONAL SYMBOLS

DIMENSION UNITS	SCALE
mm	1:1

GENERAL TOLERANCES (UNLESS SPECIFIED)

ANGULAR TOL	± 3°
4 PLACES	±
3 PLACES	±
2 PLACES	± 0.200
1 PLACE	±
0 PLACES	±

DRAFT WHERE APPLICABLE MUST REMAIN WITHIN DIMENSIONS

CURRENT REV DESC: Adding New Part Numbers

STATUS: Production
DRWN: Meghraj Boodagatti 2026-06-03
CHK'D: Meghraj Boodagatti 2026-06-10
APPR: Saravanakumar Murugesan 2026-06-10

THIRD ANGLE PROJECTION | DRAWING: A3-SIZE | SERIES: 87833

molex

MILLIGRID, 2MM PITCH
SHROUDED HEADER R/A, THROUGH HOLE

PRODUCT CUSTOMER DRAWING

DOCUMENT NUMBER	DOC TYPE	DOC PART	REVISION
SD-87833-0001	PSD	001	A15

MATERIAL NUMBER	CUSTOMER	SHEET NUMBER
SEE TABLE	GENERAL MARKET	3 OF 9

8 TO 12 CIRCUITS

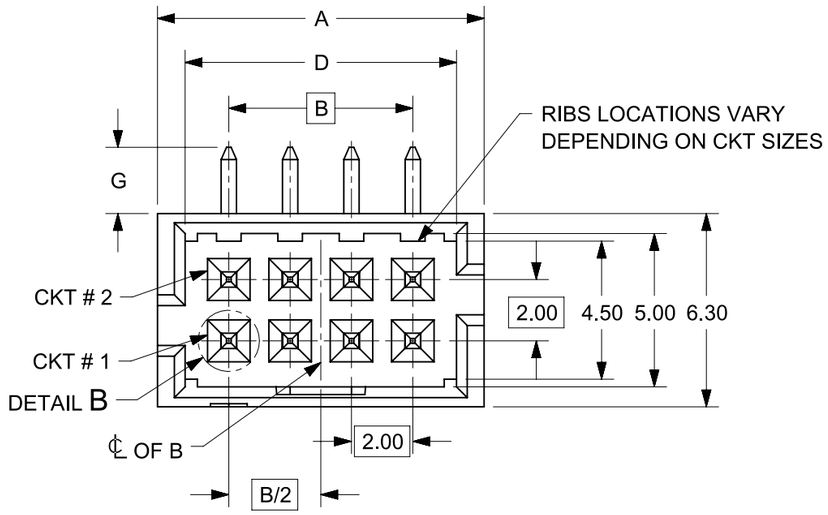

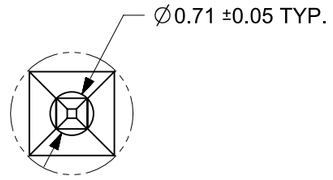

DETAIL B

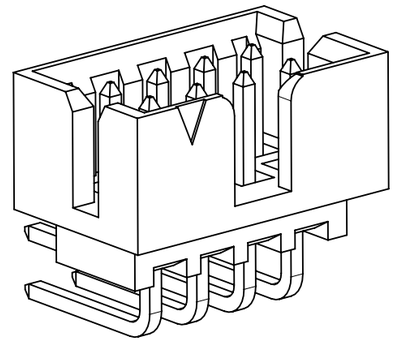

ISO VIEW OF HEADER WITH CENTER POLARIZATION AND DUAL SIDE SLOTS

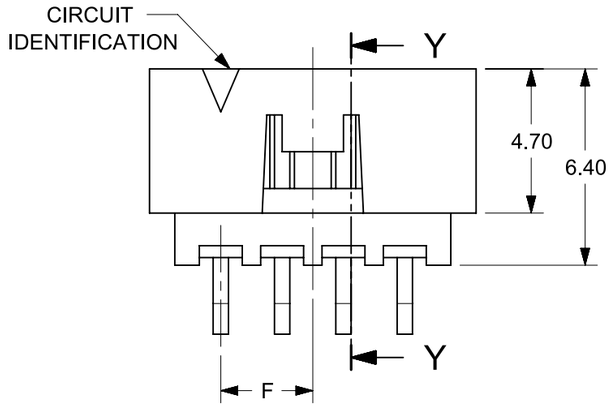

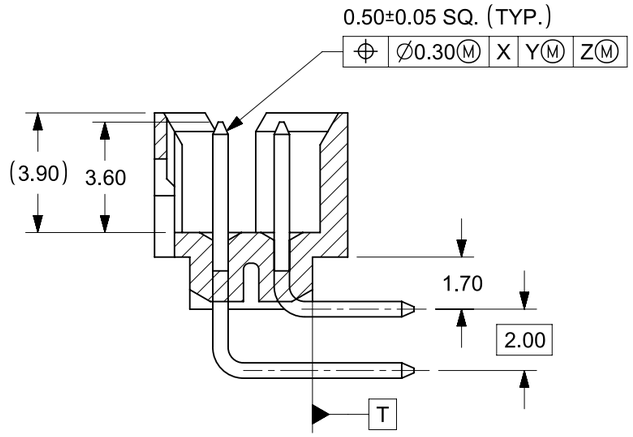

SECTION Y-Y

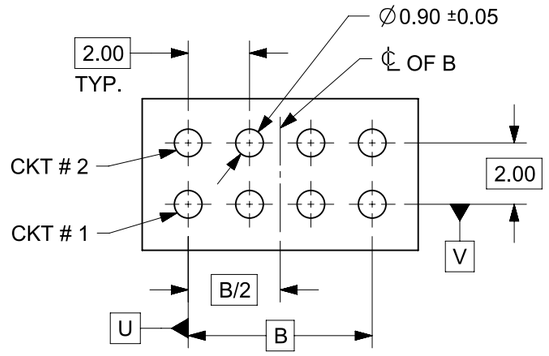

RECOMMENDED PCB LAYOUT

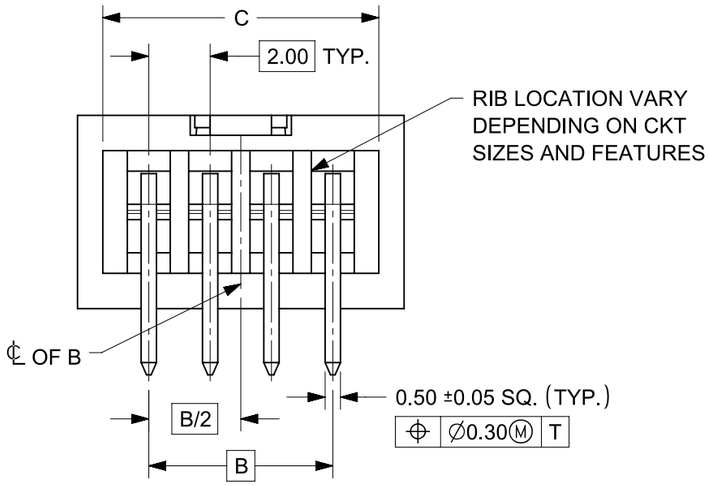

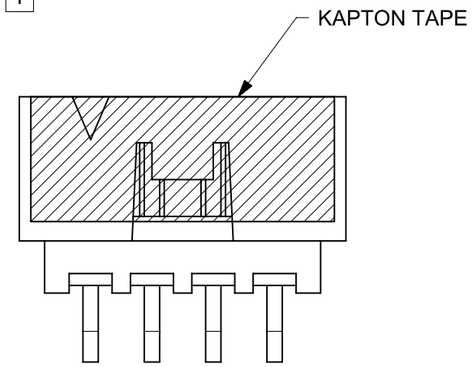

NOTES:
1. MATERIALS:
   HOUSING: 30% GF, NYLON, UL94V-0, COLOR: BLACK
   PIN: 0.50mm SQ. PHOSPHOR BRONZE.
2. FINISHES: REFER TO PLATING OPTIONS.
3. PRODUCT SPECIFICATION: PS-87831-027
4. PACKAGING SPECIFICATION: SEE PACKAGING SPECS TABLE ON SHEET 1
5. MATES WITH: A. MOLEX CRIMP RECEPTACLE HOUSING: 51110 SERIES
   AND CRIMP TERMINAL: 50394 SERIES.
   B. MOLEX 2mm MILLIGRID DUAL ROW IDT: 87568 SERIES.
   C. MOLEX 2mm MILLIGRID DUAL ROW RECEPTACLE:
   79107 (GOLD PLATED), 78787 (TIN PLATED)
6. FOR ILLUSTRATION PURPOSE, 8 CIRCUIT HEADER IS SHOWN.

THIS DRAWING CONTAINS INFORMATION THAT IS PROPRIETARY TO MOLEX ELECTRONIC TECHNOLOGIES, LLC AND SHOULD NOT BE USED WITHOUT WRITTEN PERMISSION

FUNCTIONAL SYMBOLS	DIMENSION UNITS: mm	SCALE: 5:1	CURRENT REV DESC: Adding New Part Numbers
F/A = 0	GENERAL TOLERANCES (UNLESS SPECIFIED)		
F/C = 0	ANGULAR TOL	± 3°	
F/P = 0	4 PLACES	±	
DIVISIONAL SYMBOLS	3 PLACES	±	
	2 PLACES	± 0.200	STATUS: Production
	1 PLACE	±	DRWN: Meghraj Boodagatti 2026-06-03
	0 PLACES	±	CHK'D: Meghraj Boodagatti 2026-06-10
	DRAFT WHERE APPLICABLE MUST REMAIN WITHIN DIMENSIONS		APPR: Saravanakumar Murugesan 2026-06-10

THIRD ANGLE PROJECTION | DRAWING: A3-SIZE | SERIES: 87833

molex

MILLIGRID, 2MM PITCH
SHROUDED HEADER R/A, THROUGH HOLE

PRODUCT CUSTOMER DRAWING

DOCUMENT NUMBER	DOC TYPE	DOC PART	REVISION
SD-87833-0001	PSD	001	A15

MATERIAL NUMBER	CUSTOMER	SHEET NUMBER
SEE TABLE	GENERAL MARKET	4 OF 9

8 TO 12 CIRCUITS

CKT SIZE	ASSY. P/N WITHOUT KAPTON IN TUBE	ASSY. P/N WITH KAPTON IN TUBE	ASSY. P/N WITH KAPTON IN T&R	PLATING OPTIONS	FRICTION LOCKS		DUAL SIDE SLOTS	CENTER POLARIZATION	DIMENSION						
					DUAL	CENTER			A	B	C	D	E	F	G (SOLDER TAIL)
8	87833-0819	N.A	N.A	1	N.A	N.A	YES	YES	10.65	6.00	9.00	8.85	N.A	N.A	2.16
	87833-0820	N.A	N.A	2											
	87833-0821	N.A	87833-7621	3											
	87833-6320	N.A	N.A	2	N.A	N.A	YES	YES						N.A	3.18
	87833-6321	N.A	N.A	3											
	87833-0831	87833-0841	87833-0851	2	N.A	YES	YES	N.A						3.00	2.16
	87833-0832	N.A	N.A	3											
	87833-0861	N.A	N.A	2	N.A	YES	YES	N.A						3.00	3.18
	87833-0824	N.A	N.A	2	N.A	N.A	YES	YES						N.A	2.92
	87833-0825	N.A	N.A	3											
10	87833-1019	N.A	N.A	1	N.A	N.A	YES	YES	12.65	8.00	11.00	10.85	N.A	N.A	2.16
	87833-1020	N.A	87833-1026	2											
	87833-1021	N.A	N.A	3											
	87833-1031	N.A	87833-1027	2	N.A	YES	YES	N.A						4.00	2.16
	87833-1032	N.A	N.A	3											
	N.A	87833-1041	87833-1051	2	N.A	YES	YES	N.A						4.00	1.70
	87833-1024	N.A	N.A	2	N.A	N.A	YES	YES						N.A	2.92
	87833-1025	N.A	N.A	3											
12	87833-1219	N.A	N.A	1	N.A	N.A	YES	YES	14.65	10.00	13.00	12.85	N.A	N.A	2.16
	87833-1220	N.A	87833-1240	2											
	87833-1221	N.A	N.A	3											
	87833-6020	N.A	N.A	2	N.A	N.A	YES	YES						N.A	3.18
	87833-1231	N.A	N.A	2	N.A	YES	YES	N.A						5.00	2.16
	87833-1232	N.A	N.A	3											
	87833-1224	N.A	N.A	2	N.A	N.A	YES	YES						N.A	2.92
	87833-1225	N.A	N.A	3											

PLATING OPTIONS:

1 - 0.05-0.13µm/2-5µin GOLD IN CONTACT AREA AND 1.88µm/75µin MIN. MATTE TIN IN SOLDER TAIL AREA OVER 1.27µm/50µin MIN. NICKEL OVERALL.

2 - 0.38µm/15µin MIN. GOLD IN CONTACT AREA AND 1.88µm/75µin MIN. MATTE TIN IN SOLDER TAIL AREA OVER 1.27µm/50µin MIN. NICKEL OVERALL.

3 - 0.76µm/30µin MIN. GOLD IN CONTACT AREA AND 1.88µm/75µin MIN. MATTE TIN IN SOLDER TAIL AREA OVER 1.27µm/50µin MIN. NICKEL OVERALL.

THIS DRAWING CONTAINS INFORMATION THAT IS PROPRIETARY TO MOLEX ELECTRONIC TECHNOLOGIES, LLC AND SHOULD NOT BE USED WITHOUT WRITTEN PERMISSION

FUNCTIONAL SYMBOLS: FA = 0, FC = 0, FP = 0

DIVISIONAL SYMBOLS

DIMENSION UNITS: mm | SCALE: 1:1

GENERAL TOLERANCES (UNLESS SPECIFIED)

ANGULAR TOL	± 3°
4 PLACES	±
3 PLACES	±
2 PLACES	± 0.200
1 PLACE	±
0 PLACES	±

DRAFT WHERE APPLICABLE MUST REMAIN WITHIN DIMENSIONS

CURRENT REV DESC: Adding New Part Numbers

STATUS: Production

DRWN: Meghraj Boodagatti 2026-06-03

CHK'D: Meghraj Boodagatti 2026-06-10

APPR: Saravanakumar Murugesan 2026-06-10

THIRD ANGLE PROJECTION | DRAWING: A3-SIZE | SERIES: 87833

molex

MILLIGRID, 2MM PITCH
SHROUDED HEADER R/A, THROUGH HOLE

PRODUCT CUSTOMER DRAWING

DOCUMENT NUMBER	DOC TYPE	DOC PART	REVISION
SD-87833-0001	PSD	001	A15

MATERIAL NUMBER	CUSTOMER	SHEET NUMBER
SEE TABLE	GENERAL MARKET	5 OF 9

14 TO 50 CIRCUITS

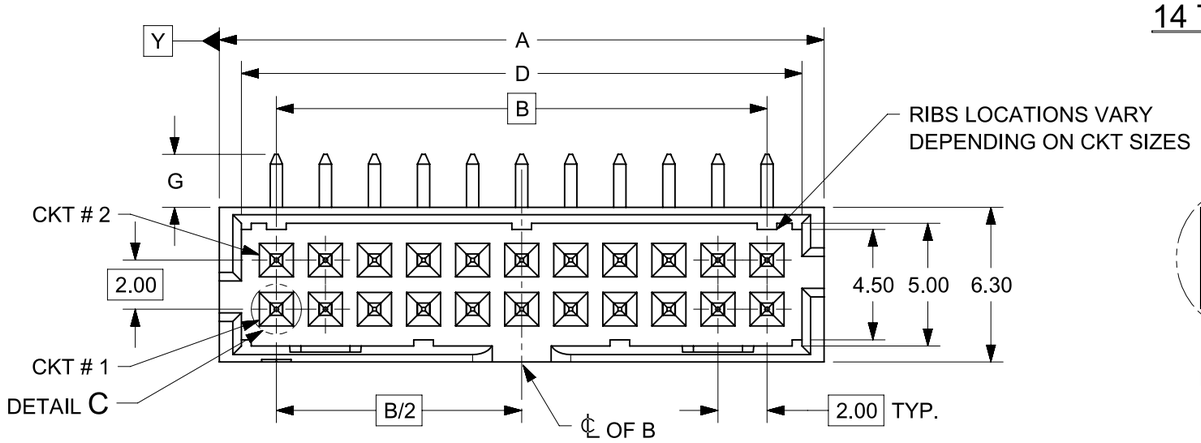

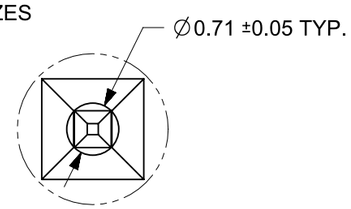

DETAIL C

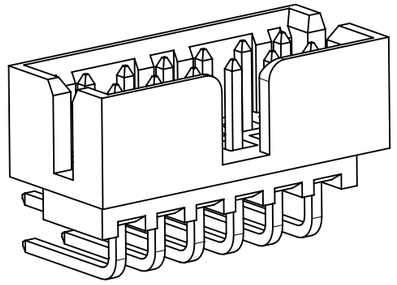

ISO VIEW OF HEADER WITH CENTER POLARIZATION AND DUAL SIDE SLOTS

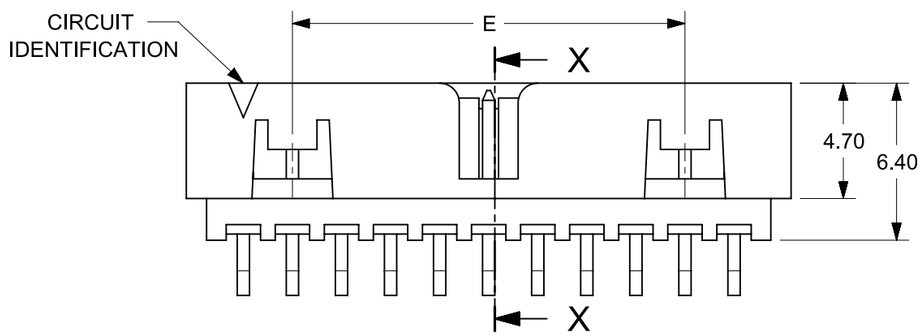

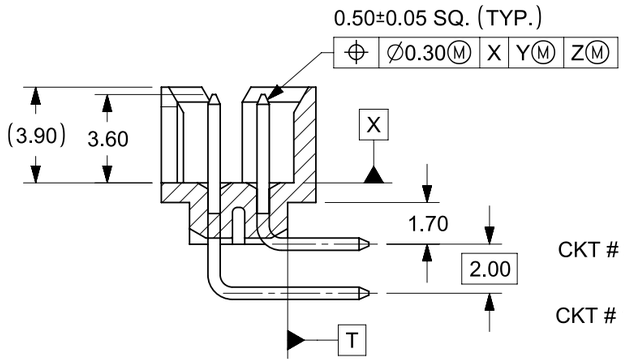

SECTION X-X

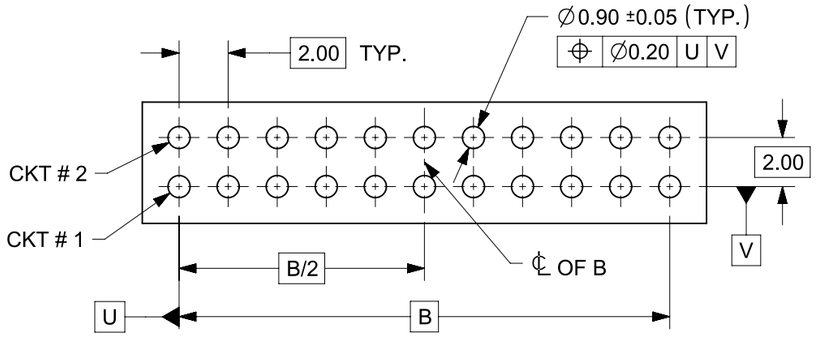

RECOMMENDED PCB LAYOUT

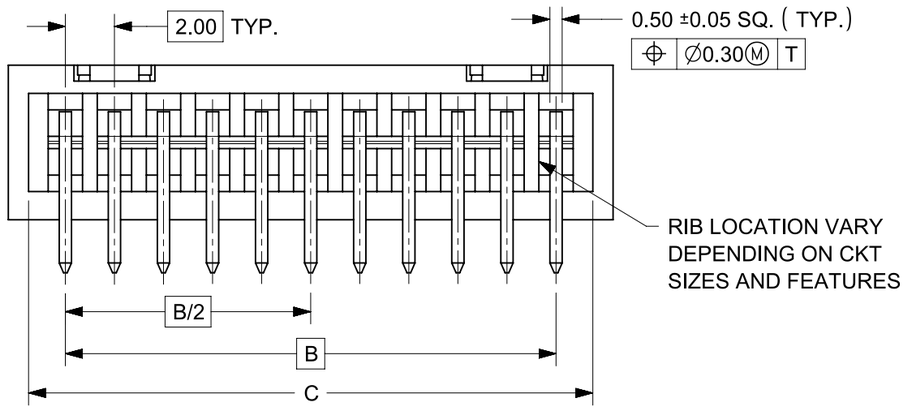

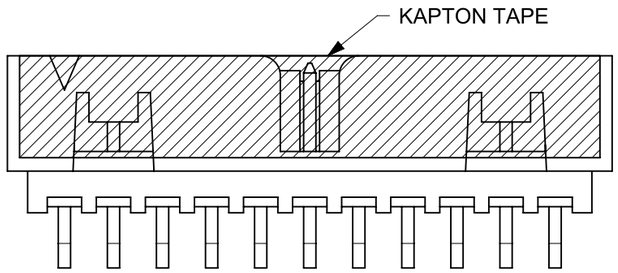

NOTES:
1. MATERIALS:
   HOUSING: 30% GF, NYLON, UL94V-0, COLOR: BLACK.
   PIN: 0.50mm SQ PHOSPHOR BRONZE.
2. FINISHES: REFER TO PLATING OPTIONS.
3. PRODUCT SPECIFICATION: PS-87831-027
4. PACKAGING SPECIFICATION: SEE PACKAGING SPECS TABLE ON SHEET 1
5. MATES WITH: A. MOLEX CRIMP RECEPTACLE HOUSING: 51110 SERIES
   AND CRIMP TERMINAL: 50394 SERIES.
   B. MOLEX 2mm MILLIGRID DUAL ROW IDT: 87568 SERIES.
   C. MOLEX 2mm MILLIGRID DUAL ROW RECEPTACLE:
   79107 (GOLD PLATED), 78787 (TIN PLATED)
6. FOR ILLUSTRATION PURPOSE, 22 CIRCUITS HEADER IS SHOWN.

THIS DRAWING CONTAINS INFORMATION THAT IS PROPRIETARY TO MOLEX ELECTRONIC TECHNOLOGIES, LLC AND SHOULD NOT BE USED WITHOUT WRITTEN PERMISSION

FUNCTIONAL SYMBOLS	DIMENSION UNITS	SCALE	CURRENT REV DESC: Adding New Part Numbers	molex
FA = 0	mm	5:1		MILLIGRID, 2MM PITCH SHROUDED HEADER R/A, THROUGH HOLE
FC = 0	GENERAL TOLERANCES (UNLESS SPECIFIED)			
FP = 0	ANGULAR TOL ± 3°			PRODUCT CUSTOMER DRAWING
DIVISIONAL SYMBOLS	4 PLACES ±			
	3 PLACES ±		STATUS: Production	
	2 PLACES ± 0.200		DRWN: Meghraj Boodagatti 2026-06-03	DOCUMENT NUMBER: SD-87833-0001
	1 PLACE ±		CHK'D: Meghraj Boodagatti 2026-06-10	DOC TYPE: PSD; DOC PART: 001; REVISION: A15
	0 PLACES ±		APPR: Saravanakumar Murugesan 2026-06-10	
	DRAFT WHERE APPLICABLE MUST REMAIN WITHIN DIMENSIONS		THIRD ANGLE PROJECTION; DRAWING: A3-SIZE; SERIES: 87833	MATERIAL NUMBER: SEE TABLE; CUSTOMER: GENERAL MARKET; SHEET NUMBER: 6 OF 9

14 TO 24 CIRCUITS

CKT SIZE	ASSY. P/N WITHOUT KAPTON IN TUBE	ASSY. P/N WITH KAPTON IN TUBE	ASSY. P/N WITH KAPTON IN T&R	ASSY. P/N WITHOUT KAPTON IN T&R	PLATING OPTIONS	FRICTION LOCKS		DUAL SIDE SLOTS	CENTER POLARIZATION	DIMENSION						
						DUAL	CENTER			A	B	C	D	E	F	G (SOLDER TAIL)
14	87833-1419	N.A	N.A	N.A	1	YES	N.A	YES	YES	16.65	12.00	15.00	14.85	8.00	N.A	2.16
	87833-1420	N.A	N.A	N.A	2											
	87833-1421	N.A	N.A	N.A	3											
	87833-5320	N.A	N.A	N.A	2	YES	N.A	YES	YES							3.18
	87833-5321	N.A	N.A	N.A	3											
	87833-1436	N.A	N.A	N.A	3	YES	N.A	YES	YES							3.50
	87833-7520	N.A	87833-7420	N.A	2	YES	N.A	YES	YES							1.70
16	87833-1619	N.A	N.A	N.A	1	YES	N.A	YES	YES	18.65	14.00	17.00	16.85	10.00	N.A	2.16
	87833-1620	N.A	N.A	N.A	2											
	87833-1621	N.A	87833-7821	N.A	3											
	87833-6120	N.A	87833-7120	N.A	2	YES	N.A	YES	YES							3.18
18	87833-1819	N.A	N.A	N.A	1	YES	N.A	YES	YES	20.65	16.00	19.00	18.85	12.00	N.A	2.16
	87833-1820	N.A	N.A	N.A	2											
	87833-1821	N.A	N.A	N.A	3											
	87833-6220	N.A	N.A	N.A	2	YES	N.A	YES	YES							3.18
20	87833-2019	N.A	N.A	N.A	1	YES	N.A	YES	YES	22.65	18.00	21.00	20.85	14.00	N.A	2.16
	87833-2020	N.A	87833-7220	N.A	2											
	87833-2021	N.A	N.A	N.A	3											
	87833-6520	N.A	N.A	N.A	2	YES	N.A	YES	YES							3.18
	87833-6521	N.A	N.A	(A14) 87833-2037	3											
	87833-2036	N.A	N.A	N.A	3	YES	N.A	YES	YES							3.50
22	87833-2219	N.A	N.A	N.A	1	YES	N.A	YES	YES	24.65	20.00	23.00	22.85	16.00	N.A	2.16
	87833-2220	N.A	N.A	N.A	2											
	87833-2221	N.A	N.A	N.A	3											
24	87833-2419	N.A	N.A	N.A	1	YES	N.A	YES	YES	26.65	22.00	25.00	24.85	18.00	N.A	2.16
	87833-2420	N.A	87833-7020	N.A	2											
	87833-2421	N.A	N.A	N.A	3											
	87833-7320	N.A	N.A	N.A	2	YES	N.A	YES	YES							2.00
	87833-2436	N.A	N.A	N.A	3	YES	N.A	YES	YES							3.50
	87833-6920	N.A	N.A	N.A	2	YES	N.A	YES	YES							3.27

PLATING OPTIONS:

1 - 0.05-0.13µm/2-5µin GOLD IN CONTACT AREA AND 1.88µm/75µin MIN. MATTE TIN IN SOLDER TAIL AREA OVER 1.27µm/50µin MIN. NICKEL OVERALL.

2 - 0.38µm/15µin MIN. GOLD IN CONTACT AREA AND 1.88µm/75µin MIN. MATTE TIN IN SOLDER TAIL AREA OVER 1.27µm/50µin MIN. NICKEL OVERALL.

3 - 0.76µm/30µin MIN. GOLD IN CONTACT AREA AND 1.88µm/75µin MIN. MATTE TIN IN SOLDER TAIL AREA OVER 1.27µm/50µin MIN. NICKEL OVERALL.

THIS DRAWING CONTAINS INFORMATION THAT IS PROPRIETARY TO MOLEX ELECTRONIC TECHNOLOGIES, LLC AND SHOULD NOT BE USED WITHOUT WRITTEN PERMISSION

FUNCTIONAL SYMBOLS: F/A = 0, F/C = 0, F/P = 0

DIVISIONAL SYMBOLS

DIMENSION UNITS	SCALE
mm	1:1
GENERAL TOLERANCES (UNLESS SPECIFIED)	
ANGULAR TOL	± 3°
4 PLACES	±
3 PLACES	±
2 PLACES	± 0.200
1 PLACE	±
0 PLACES	±

DRAFT WHERE APPLICABLE MUST REMAIN WITHIN DIMENSIONS

CURRENT REV DESC: Adding New Part Numbers

STATUS: Production
DRWN: Meghraj Boodagatti 2026-06-03
CHK'D: Meghraj Boodagatti 2026-06-10
APPR: Saravanakumar Murugesan 2026-06-10

THIRD ANGLE PROJECTION | DRAWING: A3-SIZE | SERIES: 87833

molex

MILLIGRID, 2MM PITCH
SHROUDED HEADER R/A, THROUGH HOLE

PRODUCT CUSTOMER DRAWING

DOCUMENT NUMBER	DOC TYPE	DOC PART	REVISION
SD-87833-0001	PSD	001	A15

MATERIAL NUMBER	CUSTOMER	SHEET NUMBER
SEE TABLE	GENERAL MARKET	7 OF 9

26 TO 38 CIRCUITS

CKT SIZE	ASSY. P/N WITHOUT KAPTON IN TUBE	ASSY. P/N WITH KAPTON IN TUBE	ASSY. P/N WITH KAPTON IN T&R	PLATING OPTIONS	FRICTION LOCKS		DUAL SIDE SLOTS	CENTER POLARIZATION	DIMENSION						
					DUAL	CENTER			A	B	C	D	E	F	G (SOLDER TAIL)
26	87833-2619	N.A	N.A	1	YES	N.A	YES	YES	28.65	24.00	27.00	26.85	20.00	N.A	2.16
	87833-2620	N.A	N.A	2											
	87833-2621	N.A	N.A	3											
	87833-2636	N.A	N.A	3	YES	N.A	YES	YES							3.50
28	87833-2819	N.A	N.A	1	YES	N.A	YES	YES	30.65	26.00	29.00	28.85	22.00	N.A	2.16
	87833-2820	N.A	N.A	2											
	87833-2821	N.A	N.A	3											
	87833-6620	N.A	N.A	2	YES	N.A	YES	YES							3.18
30	87833-3019	N.A	N.A	1	YES	N.A	YES	YES	32.65	28.00	31.00	30.85	24.00	N.A	2.16
	87833-3020	N.A	N.A	2											
	87833-3021	N.A	N.A	3											
	87833-6720	N.A	N.A	2	YES	N.A	YES	YES							3.18
	87833-6721	N.A	N.A	3											
	87833-3036	N.A	N.A	3	YES	N.A	YES	YES							3.50
32	87833-3219	N.A	N.A	1	YES	N.A	YES	YES	34.65	30.00	33.00	32.85	26.00	N.A	2.16
	87833-3220	N.A	N.A	2											
	87833-3221	N.A	N.A	3											
34	87833-3419	N.A	N.A	1	YES	N.A	YES	YES	36.65	32.00	35.00	34.85	28.00	N.A	2.16
	87833-3420	N.A	N.A	2											
	87833-3421	N.A	N.A	3											
	87833-5420	N.A	N.A	2	YES	N.A	YES	YES							3.18
	87833-3424	N.A	N.A	2	N.A	N.A	YES	YES							2.92
36	87833-3619	N.A	N.A	1	YES	N.A	YES	YES	38.65	34.00	37.00	36.85	30.00	N.A	2.16
	87833-3620	N.A	N.A	2											
	87833-3621	N.A	N.A	3											
38	87833-3819	N.A	N.A	1	YES	N.A	YES	YES	40.65	36.00	39.00	38.85	32.00	N.A	2.16
	87833-3820	N.A	N.A	2											
	87833-3821	N.A	N.A	3											

PLATING OPTIONS:

1 - 0.05-0.13µm/2-5µin GOLD IN CONTACT AREA AND 1.88µm/75µin MIN. MATTE TIN IN SOLDER TAIL AREA OVER 1.27µm/50µin MIN. NICKEL OVERALL.

2 - 0.38µm/15µin MIN. GOLD IN CONTACT AREA AND 1.88µm/75µin MIN. MATTE TIN IN SOLDER TAIL AREA OVER 1.27µm/50µin MIN. NICKEL OVERALL.

3 - 0.76µm/30µin MIN. GOLD IN CONTACT AREA AND 1.88µm/75µin MIN. MATTE TIN IN SOLDER TAIL AREA OVER 1.27µm/50µin MIN. NICKEL OVERALL.

THIS DRAWING CONTAINS INFORMATION THAT IS PROPRIETARY TO MOLEX ELECTRONIC TECHNOLOGIES, LLC AND SHOULD NOT BE USED WITHOUT WRITTEN PERMISSION

FUNCTIONAL SYMBOLS: FA = 0, FC = 0, FP = 0

DIVISIONAL SYMBOLS

DIMENSION UNITS	SCALE
mm	1:1

GENERAL TOLERANCES (UNLESS SPECIFIED)

ANGULAR TOL	± 3°
4 PLACES	±
3 PLACES	±
2 PLACES	± 0.200
1 PLACE	±
0 PLACES	±

DRAFT WHERE APPLICABLE MUST REMAIN WITHIN DIMENSIONS

CURRENT REV DESC: Adding New Part Numbers

STATUS: Production

DRWN: Meghraj Boodagatti 2026-06-03

CHK'D: Meghraj Boodagatti 2026-06-10

APPR: Saravanakumar Murugesan 2026-06-10

THIRD ANGLE PROJECTION | DRAWING: A3-SIZE | SERIES: 87833

molex

MILLIGRID, 2MM PITCH
SHROUDED HEADER R/A, THROUGH HOLE

PRODUCT CUSTOMER DRAWING

DOCUMENT NUMBER	DOC TYPE	DOC PART	REVISION
SD-87833-0001	PSD	001	A15

MATERIAL NUMBER	CUSTOMER	SHEET NUMBER
SEE TABLE	GENERAL MARKET	8 OF 9

40 TO 50 CIRCUITS

CKT SIZE	ASSY. P/N WITHOUT KAPTON IN TUBE	ASSY. P/N WITH KAPTON IN TUBE	ASSY. P/N WITH KAPTON IN T&R	ASSY. P/N WITHOUT KAPTON IN T&R	PLATING OPTIONS	FRICTION LOCKS		DUAL SIDE SLOTS	CENTER POLARIZATION	DIMENSION						
						DUAL	CENTER			A	B	C	D	E	F	G (SOLDER TAIL)
40	87833-4019	N.A	N.A	N.A	1	YES	N.A	YES	YES	42.65	38.00	41.00	40.85	34.00	N.A	2.16
	87833-4020	N.A	N.A	N.A	2											
	87833-4021	N.A	N.A	N.A	3											
42	87833-4219	N.A	N.A	N.A	1	YES	N.A	YES	YES	44.65	40.00	43.00	42.85	36.00	N.A	2.16
	87833-4220	N.A	N.A	N.A	2											
	87833-4221	N.A	N.A	N.A	3											
	87833-4222	N.A	87833-4322	87833-4223	3	YES	N.A	YES	YES							3.50
44	87833-4419	N.A	N.A	N.A	1	44.65	40.00	43.00	42.85	2.16	42.00	45.00	44.85	38.00	N.A	2.16
	87833-4420	N.A	N.A	N.A	2											
	87833-4421	N.A	N.A	N.A	3											
	87833-4424	N.A	N.A	N.A	2	N.A	N.A	YES	YES							
	87833-4425	N.A	N.A	N.A	3											2.92
46	87833-4619	N.A	N.A	N.A	1	YES	N.A	YES	YES	48.65	44.00	47.00	46.85	40.00	N.A	2.16
	87833-4620	N.A	N.A	N.A	2											
	87833-4621	N.A	N.A	N.A	3											
48	87833-4819	N.A	N.A	N.A	1	YES	N.A	YES	YES	50.65	46.00	49.00	48.85	42.00	N.A	2.16
	87833-4820	N.A	N.A	N.A	2											
	87833-4821	N.A	N.A	N.A	3											
50	87833-5019	N.A	N.A	N.A	1	YES	N.A	YES	YES	52.65	48.00	51.00	50.85	44.00	N.A	2.16
	87833-5020	N.A	N.A	N.A	2											
	87833-5021	N.A	N.A	N.A	3											

PLATING OPTIONS:

1 - 0.05-0.13µm/2-5µin GOLD IN CONTACT AREA AND 1.88µm/75µin MIN. MATTE TIN IN SOLDER TAIL AREA OVER 1.27µm/50µin MIN. NICKEL OVERALL.

2 - 0.38µm/15µin MIN. GOLD IN CONTACT AREA AND 1.88µm/75µin MIN. MATTE TIN IN SOLDER TAIL AREA OVER 1.27µm/50µin MIN. NICKEL OVERALL.

3 - 0.76µm/30µin MIN. GOLD IN CONTACT AREA AND 1.88µm/75µin MIN. MATTE TIN IN SOLDER TAIL AREA OVER 1.27µm/50µin MIN. NICKEL OVERALL.

THIS DRAWING CONTAINS INFORMATION THAT IS PROPRIETARY TO MOLEX ELECTRONIC TECHNOLOGIES, LLC AND SHOULD NOT BE USED WITHOUT WRITTEN PERMISSION

FUNCTIONAL SYMBOLS: FA = 0, FC = 0, FP = 0

DIVISIONAL SYMBOLS

DIMENSION UNITS: mm

SCALE: 1:1

GENERAL TOLERANCES (UNLESS SPECIFIED)

ANGULAR TOL	± 3°
4 PLACES	±
3 PLACES	±
2 PLACES	± 0.200
1 PLACE	±
0 PLACES	±

DRAFT WHERE APPLICABLE MUST REMAIN WITHIN DIMENSIONS

CURRENT REV DESC: Adding New Part Numbers

STATUS: Production

DRWN: Meghraj Boodagatti 2026-06-03

CHK'D: Meghraj Boodagatti 2026-06-10

APPR: Saravanakumar Murugesan 2026-06-10

THIRD ANGLE PROJECTION

DRAWING: A3-SIZE

SERIES: 87833

molex

MILLIGRID, 2MM PITCH
SHROUDED HEADER R/A, THROUGH HOLE

PRODUCT CUSTOMER DRAWING

DOCUMENT NUMBER	DOC TYPE	DOC PART	REVISION
SD-87833-0001	PSD	001	A15

MATERIAL NUMBER	CUSTOMER	SHEET NUMBER
SEE TABLE	GENERAL MARKET	9 OF 9

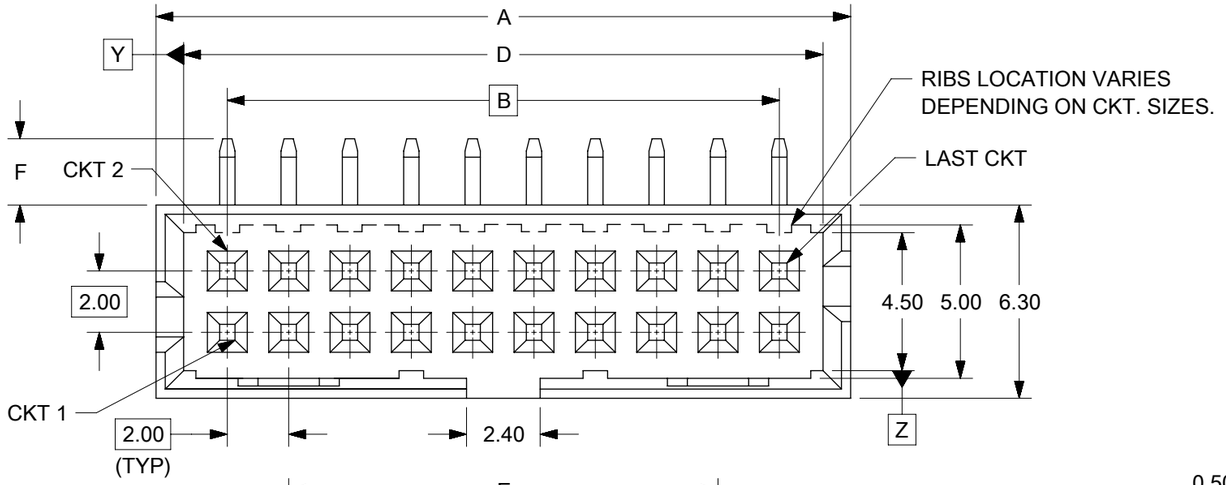

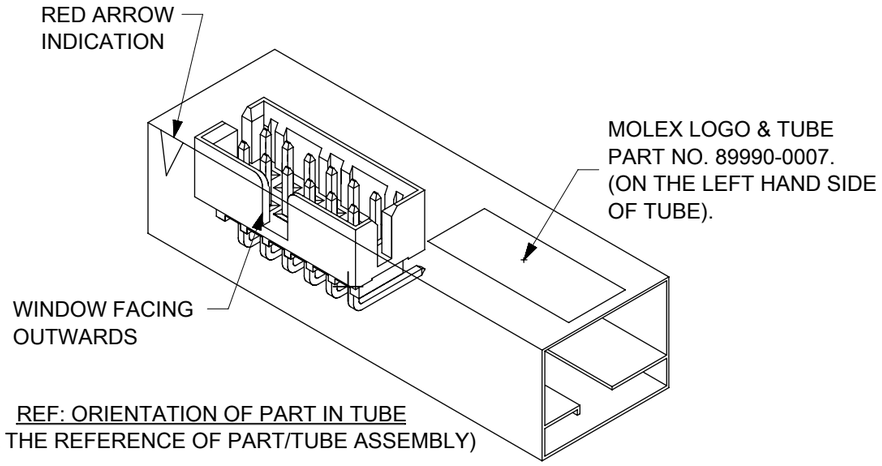

REF: ORIENTATION OF PART IN TUBE
(FOR THE REFERENCE OF PART/TUBE ASSEMBLY)

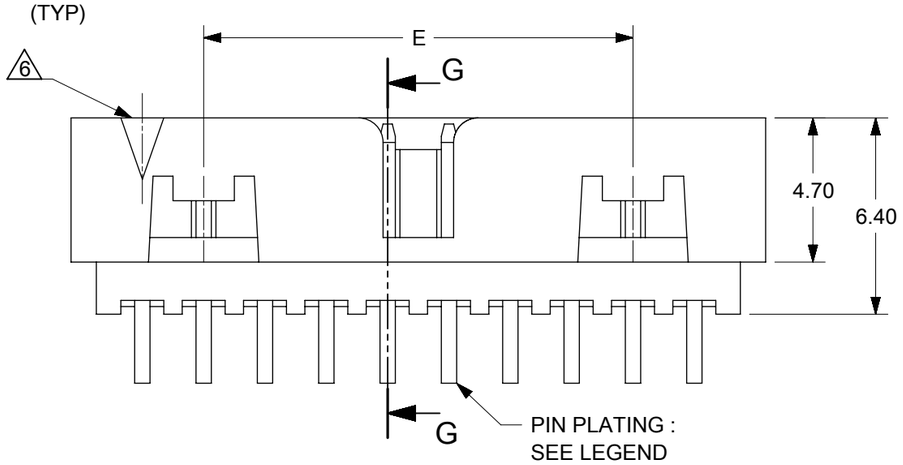

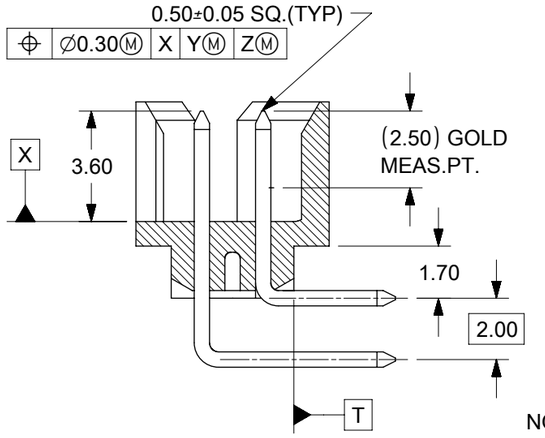

SECTION G-G

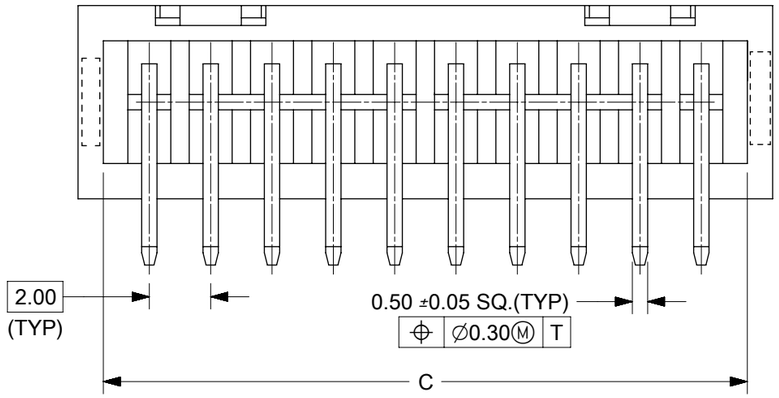

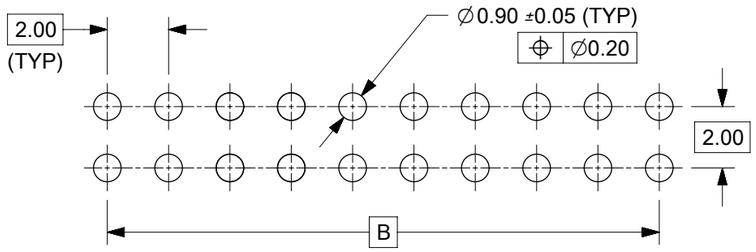

RECOMMENDED PCB PATTERN

NOTES:
1. FOR ILLUSTRATION PURPOSES, 20 CIRCUIT SIZE WAFER IS SHOWN.
2. MATERIAL :
   HOUSING : NYLON GLASS-FILLED, UL94V-0, COLOR BLACK.
   PIN : 0.50mm SQ.PHOSPHOR BRONZE.
3. PRODUCT SPECIFICATION PS-87831-027 APPLIES.
4. NO CENTRE POLARIZATION SLOT FOR CKT SIZE 4 AND 6.
5. NO SIDE LOCKING SLOT FROM 4 TO 12 CKT SIZE.
6. CKT 4 & 6 HAS NO IDENTIFICATION TAG.
7. THIS HEADER MATES WITH MOLEX:
   a) CRIMP RECEPTACLE HOUSING, 51110 SERIES
      WITH CRIMP TERMINAL, 50394 SERIES.
   b) 2mm MILLIGRID DUAL ROW IDT, 87568 SERIES.
8. PARTS TO BE PACKED IN TUBE WITH MOISTURE BARRIER BAG.
9. PLATING SPECIFICATION REFERRED TO SHEET 2.
10. PACKAGING SPEC: PK-87831-001 FOR TUBE
    PK-87831-300 FOR T&R

QUALITY SYMBOLS	
FA	= 0
FC	= 0
FP	= 0
▼	= 0
C	= 0
☒	= 0
■	= 0
C	= 0

THIS DRAWING CONTAINS INFORMATION THAT IS PROPRIETARY TO MOLEX ELECTRONIC TECHNOLOGIES, LLC AND SHOULD NOT BE USED WITHOUT WRITTEN PERMISSION

EC NO: 170067	DRWN: MUM	2017/12/15
CHK'D: CD		2018/04/24
APPR: GGA		2018/04/24
MIGRATED TO ECTR		
REV B12		

GENERAL TOLERANCES (UNLESS SPECIFIED)	MM	INCH
4 PLACES	±	±
3 PLACES	±	±
2 PLACES	± 0.2	±
1 PLACES	±	±
0 PLACES	±	±
ANGULAR TOL ± 3.0		
DRAFT WHERE APPLICABLE MUST REMAIN WITHIN DIMENSIONS		

DIMENSION UNITS	MM
SCALE	NTS
DRWN BY	ATSEE
DATE	2003/10/23
CHK'D BY	KCLING
DATE	2003/11/07
APPR BY	MLONG
DATE	2010/11/19
DRAWING SIZE	A3
THIRD ANGLE PROJECTION	

molex®

MGRID, SHROUDED HEADER
W/SLOT AND STANDOFF, R/A

PRODUCT CUSTOMER DRAWING

SERIES	MATERIAL NUMBER	CUSTOMER
87833	SEE TABLE	GENERAL MARKET

DOCUMENT NUMBER	DOC TYPE	DOC PART	SHEET NUMBER
SD-87833-010	PSD	001	1 OF 3

RELEASE STATUS	P1	RELEASE DATE	2018/04/24 12:56:31

FORMAT: Met-lega-master-tb-prod-A3
REVISION: C
DATE: 2017/02/06

PLS REFER TO PART 87833-**3* FOR CENTER LOCKING SLOT OPTION.

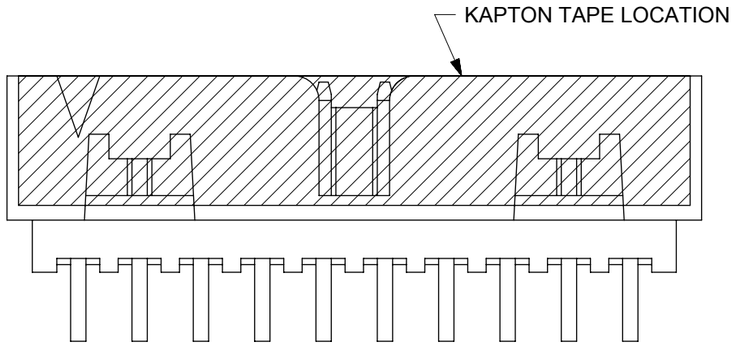

PART NO IN TUBE (W/O KAPTON)	PART NO IN T&R (WITH KAPTON)	CKT SIZE	VOID PIN LOCATION	DIMENSION A	B	C	D	E	F	9 PLATING OPTION
87833-04**	----	4	----	6.65	2.00	5.00	4.85	----	2.16	19,20 or 21
87833-06**	----	6	----	8.65	4.00	7.00	6.85	----		
87833-08**	----	8	----	10.65	6.00	9.00	8.85	----		
87833-10**	----	10	----	12.65	8.00	11.00	10.85	----		
87833-12**	----	12	----	14.65	10.00	13.00	12.85	----		
87833-14**	----	14	----	16.65	12.00	15.00	14.85	8.00		
87833-16**	----	16	----	18.65	14.00	17.00	16.85	10.00		18,19,20 OR 21
87833-18**	----	18	----	20.65	16.00	19.00	18.85	12.00		19,20, OR 21
87833-20**	----	20	----	22.65	18.00	21.00	20.85	14.00		
87833-22**	----	22	----	24.65	20.00	23.00	22.85	16.00		
87833-24**	----	24	----	26.65	22.00	25.00	24.85	18.00		
87833-26**	----	26	----	28.65	24.00	27.00	26.85	20.00		
87833-28**	----	28	----	30.65	26.00	29.00	28.85	22.00		
87833-30**	----	30	----	32.65	28.00	31.00	30.85	24.00		
87833-32**	----	32	----	34.65	30.00	33.00	32.85	26.00		
87833-34**	----	34	----	36.65	32.00	35.00	34.85	28.00		
87833-36**	----	36	----	38.65	34.00	37.00	36.85	30.00		
87833-38**	----	38	----	40.65	36.00	39.00	38.85	32.00		
87833-40**	----	40	----	42.65	38.00	41.00	40.85	34.00		
87833-42**	----	42	----	44.65	40.00	43.00	42.85	36.00		
87833-44**	----	44	----	46.65	42.00	45.00	44.85	38.00		
87833-46**	----	46	----	48.65	44.00	47.00	46.85	40.00		
87833-48**	----	48	----	50.65	46.00	49.00	48.85	42.00		
87833-50**	----	50	----	52.65	48.00	51.00	50.85	44.00		
87833-7000	----	34	21	36.65	32.00	35.00	34.85	28.00		00
87833-5121	----	26	14	28.65	24.00	27.00	26.85	20.00		21
87833-5120	----	10	7	12.65	8.00	11.00	10.85	----		20
87833-5520	----	40	21	42.65	38.00	41.00	40.85	34.00		
87833-5620	----	20	14	22.65	18.00	21.00	20.85	14.00		
87833-5720	----	24	13	26.65	22.00	25.00	24.85	18.00		
87833-5820	----	14	1	16.65	12.00	15.00	14.85	8.00		
87833-2020	87833-7220	20	----	22.65	18.00	21.00	20.85	14.00		
87833-63**	----	8	----	10.65	6.00	9.00	8.85	----	3.18	20 OR 21
87833-53**	----	14	----	16.65	12.00	15.00	14.85	8.00		
87833-5420	----	34	----	36.65	32.00	35.00	34.85	28.00		20
87833-5920	----	4	----	6.65	2.00	5.00	4.85	----		
87833-6020	----	12	----	14.65	10.00	13.00	12.85	----		
87833-6120	87833-7120	16	----	18.65	14.00	17.00	16.85	10.00		
87833-6220	----	18	----	20.65	16.00	19.00	18.85	12.00		
87833-6420	----	6	----	8.65	4.00	7.00	6.85	----		
87833-65**	----	20	----	22.65	18.00	21.00	20.85	14.00		20 OR 21

QUALITY SYMBOLS
E/A = 0
E/C = 0
E/P = 0
▼ = 0
C = 0
☒ = 0
■ = 0
V = 0

THIS DRAWING CONTAINS INFORMATION THAT IS PROPRIETARY TO MOLEX ELECTRONIC TECHNOLOGIES, LLC AND SHOULD NOT BE USED WITHOUT WRITTEN PERMISSION

MIGRATED TO ECTR
EC NO: 170067 2017/12/15
DRWN: MUM 2018/04/24
CHK'D: CD 2018/04/24
APPR: GGA
REV B12

GENERAL TOLERANCES (UNLESS SPECIFIED)

	MM	INCH
4 PLACES	±	±
3 PLACES	±	±
2 PLACES	± 0.2	±
1 PLACES	±	±
0 PLACES	±	±

ANGULAR TOL ± 3.0

DRAFT WHERE APPLICABLE MUST REMAIN WITHIN DIMENSIONS

DIMENSION UNITS: MM
SCALE: NTS
DRWN BY: ATSEE DATE: 2003/10/23
CHK'D BY: KCLING DATE: 2003/11/07
APPR BY: MLONG DATE: 2010/11/19
DRAWING SIZE: A3
THIRD ANGLE PROJECTION

molex®

MGRID, SHROUDED HEADER W/SLOT AND STANDOFF, R/A

PRODUCT CUSTOMER DRAWING

SERIES	MATERIAL NUMBER	CUSTOMER
87833	SEE TABLE	GENERAL MARKET

DOCUMENT NUMBER	DOC TYPE	DOC PART	SHEET NUMBER
SD-87833-010	PSD	001	2 OF 3

RELEASE STATUS	P1	RELEASE DATE	2018/04/24 12:56:31

FORMAT: Met-lega-master-tb-prod-A3
REVISION: C
DATE: 2017/02/06

PART NO IN TUBE (W/O KAPTON)	CKT SIZE	VOID PIN LOCATION	DIMENSION A	B	C	D	E	F	9 PLATING OPTION
87833-6620	28	-	30.65	26.00	29.00	28.85	22.00	3.18	20
87833-67**	30	-	32.65	28.00	31.00	30.85	24.00		20 OR 21
87833-6920	24	-	26.65	22.00	25.00	24.85	18.00	3.27	20

PART NUMBER LEGEND :

87833 - * * * *

9 PLATING OPTIONS:

18 - 0.38µm/15µin PdNi WITH GOLD FLASH IN CONTACT AREA AND 1.88µm/75µin MIN.TIN IN SOLDER TAIL AREA OVER 1.27µm/50µin MIN. NICKEL OVERALL.

19 - 0.05 - 0.13µm/2 - 5µin GOLD IN CONTACT AREA AND 1.88µm/75µin MIN.TIN IN SOLDER TAIL AREA OVER 1.27µm/50µin MIN. NICKEL OVERALL.

00/ 20 - 0.38µm/15µin GOLD IN CONTACT AREA AND 1.88µm/75µin MIN.TIN IN SOLDER TAIL AREA OVER 1.27µm/50µin MIN. NICKEL OVERALL.

21 - 0.76µm/30µin GOLD IN CONTACT AREA AND 1.88µm/75µin MIN.TIN IN SOLDER TAIL AREA OVER 1.27µm/50µin MIN. NICKEL OVERALL.

RELEASE STATUS	P1	RELEASE DATE	2018/04/24 12:56:31

QUALITY SYMBOLS: E A = 0; E C = 0; E P = 0; ▼ = 0; C = 0; ☒ = 0; ■ = 0; C = 0

THIS DRAWING CONTAINS INFORMATION THAT IS PROPRIETARY TO MOLEX ELECTRONIC TECHNOLOGIES, LLC AND SHOULD NOT BE USED WITHOUT WRITTEN PERMISSION

MIGRATED TO ECTR

EC NO: 170067 2017/12/15
DRWN: MUM 2018/04/24
CHK'D: CD 2018/04/24
APPR: GGA

B12 REV

GENERAL TOLERANCES (UNLESS SPECIFIED)

	MM	INCH
4 PLACES	±	±
3 PLACES	±	±
2 PLACES	± 0.2	±
1 PLACES	±	±
0 PLACES	±	±

ANGULAR TOL ± 3.0

DRAFT WHERE APPLICABLE MUST REMAIN WITHIN DIMENSIONS

DIMENSION UNITS: MM
SCALE: NTS
DRWN BY: ATSEE DATE: 2003/10/23
CHK'D BY: KCLING DATE: 2003/11/07
APPR BY: MLONG DATE: 2010/11/19
DRAWING SIZE: A3
THIRD ANGLE PROJECTION

molex®

MGRID, SHROUDED HEADER W/SLOT AND STANDOFF, R/A

PRODUCT CUSTOMER DRAWING

SERIES	MATERIAL NUMBER	CUSTOMER
87833	SEE TABLE	GENERAL MARKET

DOCUMENT NUMBER	DOC TYPE	DOC PART	SHEET NUMBER
SD-87833-010	PSD	001	3 OF 3

FORMAT: Met-lega-master-tb-prod-A3
REVISION: C
DATE: 2017/02/06