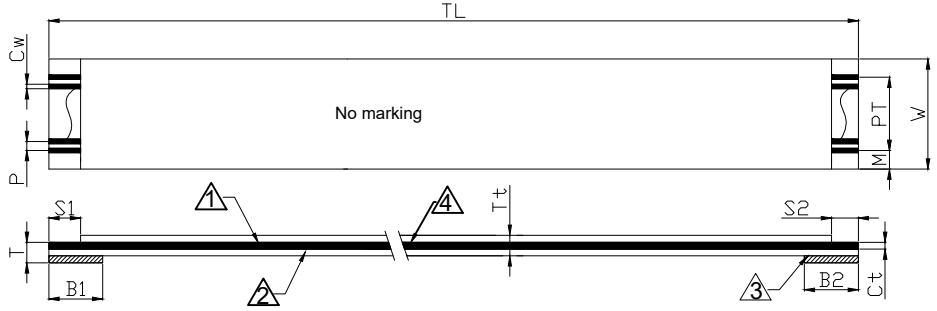

T1 Type

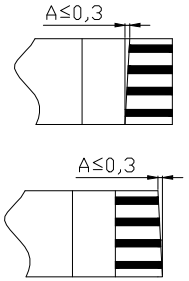

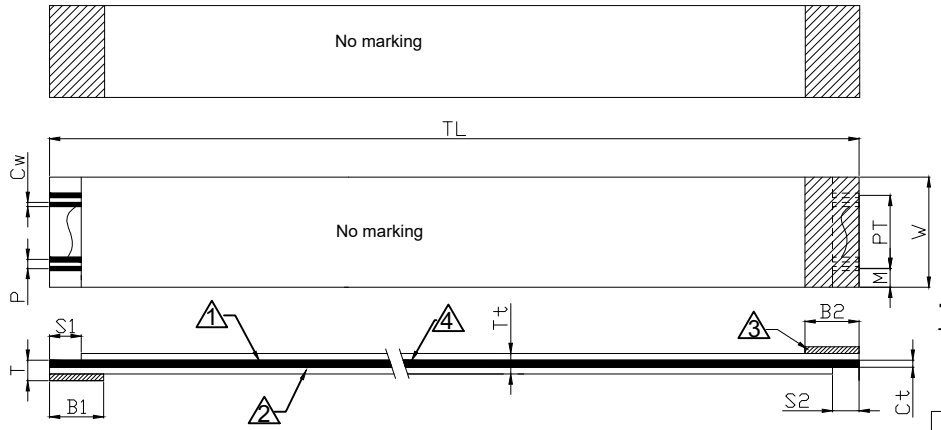

⑦

T2 Type

③ SPECIFITION:

Electrical

④ 1. Current rating: 1.0A max.
2. Voltage rating: 90V
3. Insulation resistance: 1000MΩ min. 500VDC
4. Dielectric strength: 500VAC/minute
5. Conductor resistance:<1.89Ω/m
6. Contact resistance: <20mΩ

Mechanical

1. Elongation of insulator: >60%
2. Tensile strenght of insulator: >3.5kg/mm²
3. Flexing test: 180° > 20 times
4. Abrasion: >10000 times
5. Durability: >20 cycles

Environmental

1. Operating temperature: -40 ~ +105°C
2. Heat resistance: 85°C 96hours
3. Moisture resistance: 40°C 95% RH 96hours
4. Flammability rating: UL Sub.758

UL20890 105°C 90V VW-1

⑧⑤ Packaging: 100pcs/PE bag

Spec			
Conductor poles	N	②①4-50P	
Pitch	P	1.0	±0.08
Total cable length	TL	see order code	
Total pitch	PT	(N-1)xP	±0.1
Total width	W	(N+1)xP	±0.1
Edge distance	M	1.0	±0.12

Spec			
Strip length	S1	3.5	±0.5
	S2	3.5	±0.5
Support tape length	B1	6.0	±1.0
	B2	6.0	±1.0
Mating thickness	T	0.303	±0.05
Cable thickness	Tt	0.121	±0.05
Cutting slope	A	≤0.3	

Construction			
No.	Name	Spec.	
1	Insulation thickness	No marking 43µm PET	
2	Insulation thickness	No marking 43µm PET	
3	Support tape tk.	PET Blue 225µm	
4	Conductor (Tinned copper) 1um min. Tin plated	thickness Ct	0,035±0,005
		Width Cw	0,65±0,03

WSW order code:
AFFC-100-xx-xxx-x1

No. of poles
② 04~50

Type: ⑦
1: T1 Type
2: T2 Type

Total Cable length
051: 50,80±1mm
076: 76,20±2mm
102: 101,6±2mm
127: 127±2mm
153: 152,4±2mm
203: 203,2±3mm
254: 254±3mm
305: 304,8±5mm
457: 457,2±5mm

RoHS compliant
Unit: mm

Scale	Free
TOLERANCE	
XX	±5
X	±1
X.X	±0.2
DIM	TOL
Angle	TOL

Id.	Modification	Date	Name
⑨	Change of production location and delete E-file number	12.06.2025	Segal
⑧	Update the packing quantity	11.12.2019	Segal
⑦	Adding WSW P/N	20.09.2019	Segal
⑥	Add WSW UL No.	14.05.2019	Amy
⑤	Add package qty	23.10.2018	Amy
④	Update current rating	16.04.2018	Amy

	Date	Name
Drawn	30.06.2016	Amy
Approved	12.06.2025	Segal

ASSMANN WSW components
A company of BCS

Customer-No.

ASSMANN WSW-No.
⑦ AFFC-100-xx-xxx-x1

Drawing-No.
ASS 7541 CA

rev09

Replace

Sheet