© 2023 TE Connectivity. All Rights Reserved.

REVISIONS					
P	LTR	DESCRIPTION	DATE	DWN	APVD
	B7	DRAFTING ERROR CORRECTION	01JUL2019	RK	PS
	B8	NEW PART NUMBER 5-1776119-2 IS ADDED	16JUN2023	SP	PS
	C	PKG CHANGE FROM TRAY TO BOX.	14APR2025	NMP	PS

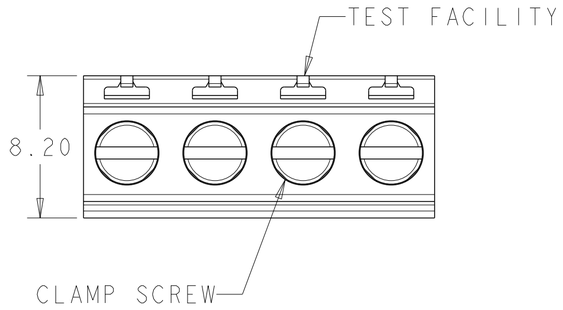

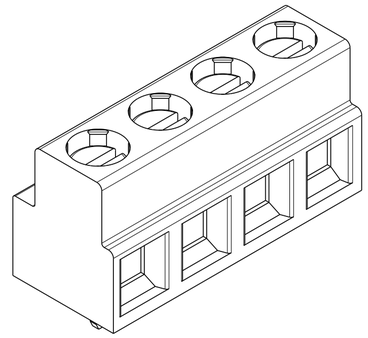

1776119-4 AS SHOWN

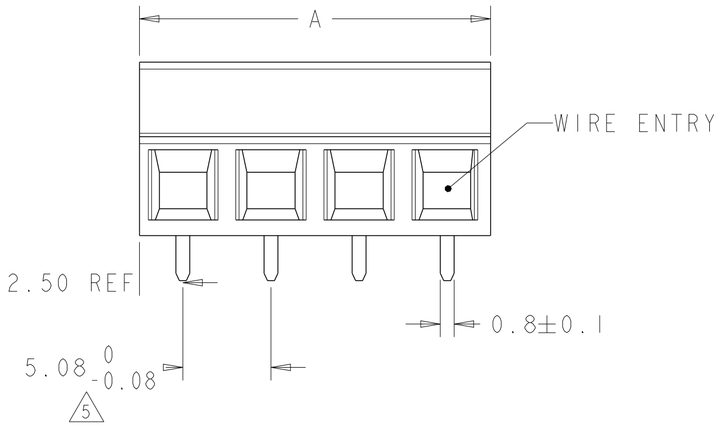

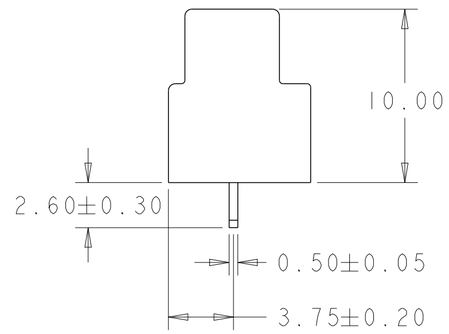

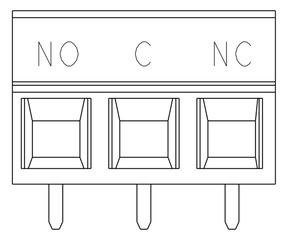

2-1776119-0 AS SHOWN

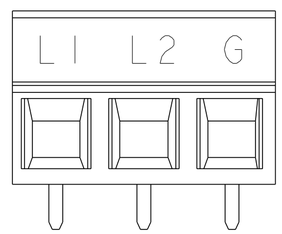

2-1776119-1 AS SHOWN

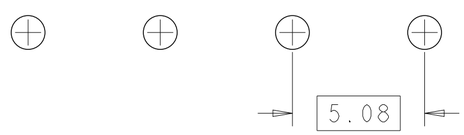

RECOMMENDED PC BOARD LAYOUT

1. MATERIAL AND FINISH
   HOUSING : HIGH TEMPERATURE POLYAMIDE, UL 94V-O RATED,
   COLOR: BLACK
   CLAMP : COPPER ALLOY, NICKEL PLATED.
   TERMINAL: COPPER ALLOY, TIN PLATED.
   CLAMPING SCREW: M3, COPPER ALLOY, NICKEL PLATED.

2. MECHANICAL:
   RECOMENDED TIGHTENING TORQUE : 0.5Nm
   WIRE STRIPPING LENGTH : 5.0-6.0mm
   BOARD HOLES DIAMETER : 1.3mm
   MAX. PC BOARD THICKNESS : 2.4mm

3. ELECTRICAL
   WIRE RANGE : 16-30 AWG
   MAX. VOLTAGE : 300 V
   MAX CURRENT : 13.5 A
   CONTACT RESISTANCE : < 15 m Ohm
   INSULATION RESISTANCE : > 1000 M Ohm (500V DC)

4. OPERATING TEMPERATURE RANGE: -40°C TO +105°C

5. TOLERANCE NOT CUMULATIVE.

6. RECOGNIZED UNDER THE COMPONENT PROGRAM OF UNDERWRITERS LABORATORIES IN.. FILE NO. E60677.

7. PERMANENT INK MARKING, WHITE.

8. PACKAGING:TAPE AND REEL

9. PACKED IN BOX.

	A	NO OF POSN	PART NUMBER
8	$10.16^{+0}_{-0.16}$	2	5-1776119-2
7	$15.24^{+0}_{-0.22}$	3	2-1776119-1
7	$15.24^{+0}_{-0.22}$	3	2-1776119-0
	$30.48^{+0}_{-0.45}$	6	1776119-6
	$25.40^{+0}_{-0.38}$	5	1776119-5
	$20.32^{+0}_{-0.30}$	4	1776119-4
	$15.24^{+0}_{-0.22}$	3	1776119-3
	$10.16^{+0}_{-0.16}$	2	1776119-2

THIS DRAWING IS A CONTROLLED DOCUMENT.

DIMENSIONS: mm

TOLERANCES UNLESS OTHERWISE SPECIFIED:
0 PLC ±-
1 PLC ±0.2
2 PLC ±0.15
3 PLC ±0.013
4 PLC ±0.0001
ANGLES ±2°

MATERIAL: SEE NOTES -
FINISH: SEE NOTES -

DWN S.WELDON 19NOV2008
CHK C.RICHARD 19NOV2008
APVD C.RICHARD 19NOV2008
PRODUCT SPEC 108-20166
APPLICATION SPEC 114-20079
WEIGHT -

TE Connectivity

NAME: TERMINAL BLOCK ASS.,STACKING SIDE

SIZE A2 | CAGE CODE 00779 | DRAWING NO C-1776119 | RESTRICTED TO -

CUSTOMER DRAWING | SCALE 6:1 | SHEET 1 OF 1 | REV C

1471-9 (3/13)