THIS DRAWING IS UNPUBLISHED. RELEASED FOR PUBLICATION -,- .
© COPYRIGHT - BY TYCO ELECTRONICS CORPORATION. ALL RIGHTS RESERVED.

LOC	DIST
AD	00

REVISIONS

P	LTR	DESCRIPTION	DATE	DWN	APVD
	H1	REVISED PER ECO-10-000443	16JAN10	KK	AEG
	J	ECR-10-018652	10SEP10	SW	MQW
	J1	REVISED AS PER ECN-26-367091	03FEB26	WB	SA

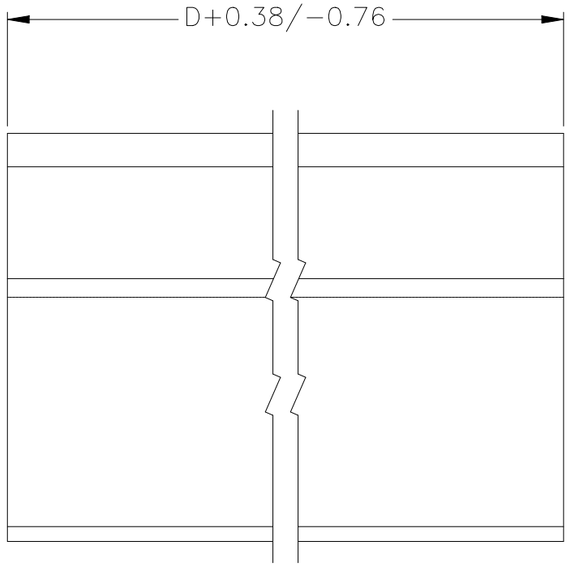

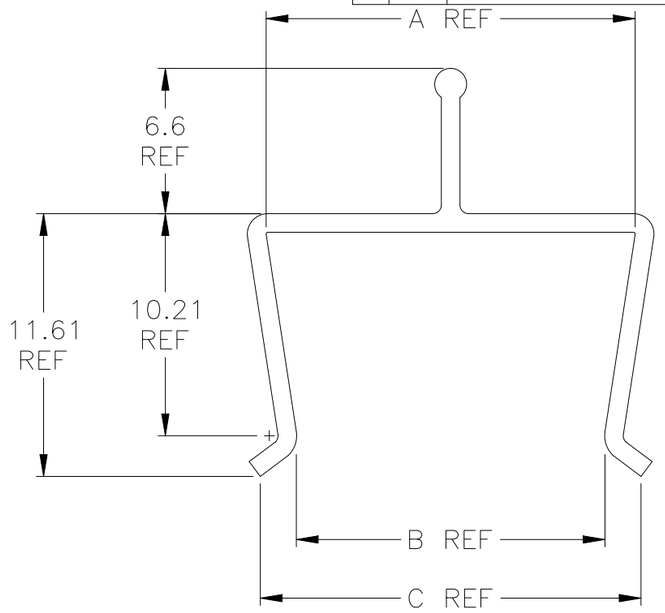

		1 TYPE "D" OR "E"	92.00	22.630	19.38	22.10	1-646502-2
		1 TYPE "D" OR "E"	30.00	22.63	19.38	22.10	1-646502-1
		2 PAIR R/A HMzd	74.93	22.63	19.38	22.10	1-646502-0
		3 PAIR HMzd	100.08	20.22	16.97	19.69	646502-9
3	OBSOLETE	8 TYPE "D" OR "E"	394.00	22.63	19.38	22.10	~~646502-8~~
		6U CARD	227.13	16.64	13.46	16.13	646502-7
		3U CARD	93.73	16.64	13.46	16.13	646502-6
3	OBSOLETE	4 TYPE "A" OR "B" STACKED	198.63	16.64	13.46	16.13	~~646502-5~~
		1 TYPE "F"	23.97	22.63	19.38	22.10	2 646502-4
3	OBSOLETE	1 TYPE "C"	23.97	16.64	13.46	16.13	~~646502-3~~
J1	OBSOLETE	1 TYPE "D" OR "E"	49.23	22.63	19.38	22.10	~~646502-2~~
		1 TYPE "A" OR "B"	49.23	16.64	13.46	16.13	646502-1
		ASSEMBLY USED ON	D	C	B	A	PART NUMBER

1. MATERIAL: LEXAN 940A. COLOR: CLEAR. MATERIAL TO BE ANTI-STATIC.
2. OBSOLETE PART NUMBER.
3. OBSOLETE PARTS: OBSOLETE CIS STREAMLINING PER D.RENAUD/D.SINISI

THIS DRAWING IS A CONTROLLED DOCUMENT.

DIMENSIONS: mm

TOLERANCES UNLESS OTHERWISE SPECIFIED:
~~0 PLC ± -~~
~~1 PLC ± -~~
~~2 PLC ± -~~ ±0.2
~~3 PLC ± -~~
~~4 PLC ± -~~
~~ANGLES ± -~~

MATERIAL 1

FINISH -

DWN	L.BRINER	2/12/99
CHK	L.BRINER	2/12/99
APVD	L.BRINER	2/12/99
PRODUCT SPEC	—	
APPLICATION SPEC	—	
WEIGHT	—	

Tyco Electronics

Tyco Electronics Corporation
Harrisburg, PA 17105-3608

NAME: COVER, Z-PACK, 2mm HM, PIN

SIZE	CAGE CODE	DRAWING NO	RESTRICTED TO
A3	00779	C-646502	—

CUSTOMER DRAWING | SCALE 4:1 | SHEET 1 OF 1 | REV J1