MAT'L NO (STRIP)	MAT'L NO (LOOSE PC)	AWG SIZE	FINISH	"A"	"B"	"C"	"D"
194200001	194200009	16-14	PREPLATED TIN 75µ MIN THICK OVER NICKEL FLASH	.235 (5.97)	.182 (4.62)	.141 (3.58)	.155 (3.94)
194200002	194200010	22-18		.179 (4.55)	.143 (3.63)	.114 (2.90)	.106 (2.69)
194200003	194200011	16-14	SELECT HARD GOLD 30µ MIN THICK WITH SELECT TIN 100 THICK OVER NICKEL 50 MIN OVERALL	.235 (5.97)	.182 (4.62)	.141 (3.58)	.155 (3.94)
194200004	194200012	22-18		.179 (4.55)	.143 (3.63)	.114 (2.90)	.106 (2.69)

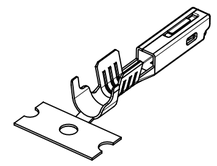

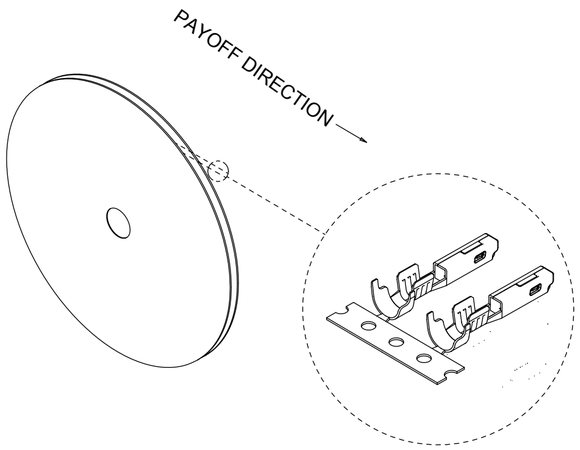

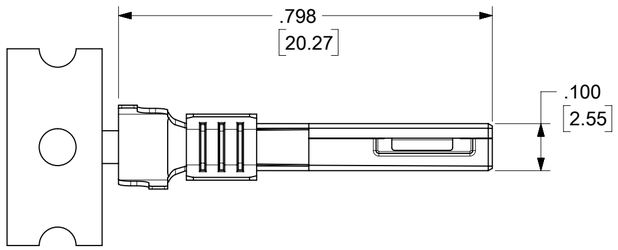

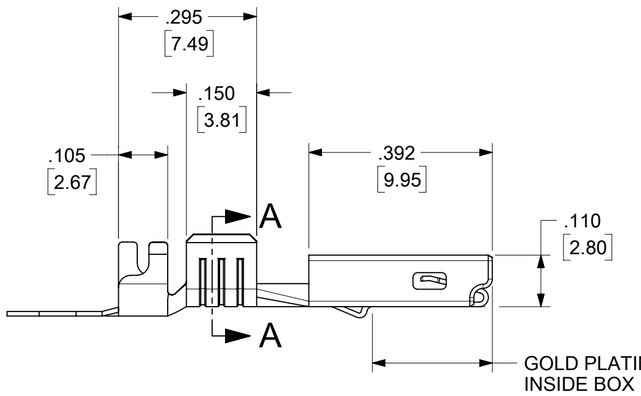

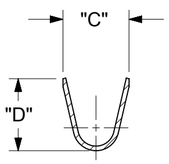

SECTION A-A

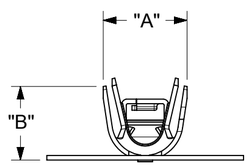

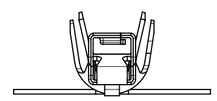

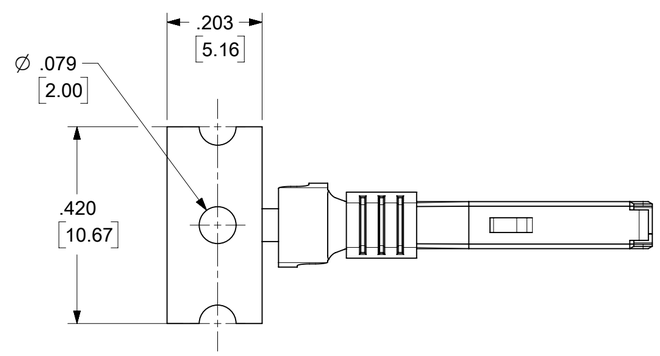

NOTES:
1. MATERIAL: COPPER ALLOY .0098/0.249 THK.
2. FINISH: SEE CHART.
3. TERMINALS FOR USE WITH 19418XXXX RECEPTACLE HOUSING ASSEMBLY.
4. STRIP TERMINALS ARE REELED AS SHOWN ABOVE ON 24" REELS, 4000 PARTS PER REEL.
5. LOOSE TERMINALS ARE BULK PACKAGED IN QUANTITIES OF 400.
6. APPLICATION TOOLING AND CRIMP SPECIFICATIONS: 63865-6200 (14-16 AWG), 63865-6300 (14-16 AWG), 63811-4000 (HAND TOOL).

THIS DRAWING CONTAINS INFORMATION THAT IS PROPRIETARY TO MOLEX ELECTRONIC TECHNOLOGIES, LLC AND SHOULD NOT BE USED WITHOUT WRITTEN PERMISSION

FUNCTIONAL SYMBOLS: FA = 0; FC = 0; FP = 0
DIVISIONAL SYMBOLS

DIMENSION UNITS: INCH/MM
SCALE: 4:1

GENERAL TOLERANCES (UNLESS SPECIFIED)

	MM	INCH
4 PLACES	±	±
3 PLACES	±	± 0.01
2 PLACES	± 0.25	± 0.02
1 PLACE	± 0.5	±
0 PLACES	±	±
ANGULAR TOL	± 3.0 °	

DRAFT WHERE APPLICABLE MUST REMAIN WITHIN DIMENSIONS

CURRENT REV DESC: REVISED TO LATEST MODEL

EC NO: 751759
DRWN: DEANNM1 2024/02/28
CHK'D: ETHRODAHL 2024/04/18
APPR: ETHRODAHL 2024/04/18

INITIAL REVISION:
DRWN: JPAWLICK 2003/05/12
APPR: RDEROSS 2003/05/13

THIRD ANGLE PROJECTION | DRAWING: C-SIZE | SERIES: 19420

molex

FEMALE RECEPTACLE
TERMINAL, 22-18 & 16-14 AWG, .059/1.50X.031/0.79

PRODUCT CUSTOMER DRAWING

DOCUMENT NUMBER	DOC TYPE	DOC PART	REVISION
SD-19420-001	PSD	001	D

MATERIAL NUMBER	CUSTOMER	SHEET NUMBER
	GENERAL MARKET	1 OF 1

DOCUMENT STATUS	P1	RELEASE DATE	2024/04/18 16:58:40

FORMAT: Eng-tega-master-B-prod-C
REVISION: E1
DATE: 2021/05/21