© – TE Connectivity. All Rights Reserved.

REVISIONS					
P	LTR	DESCRIPTION	DATE	DWN	APVD
	F6	REVISED PER ECR-25-255998	15SEP2025	SA	DSC

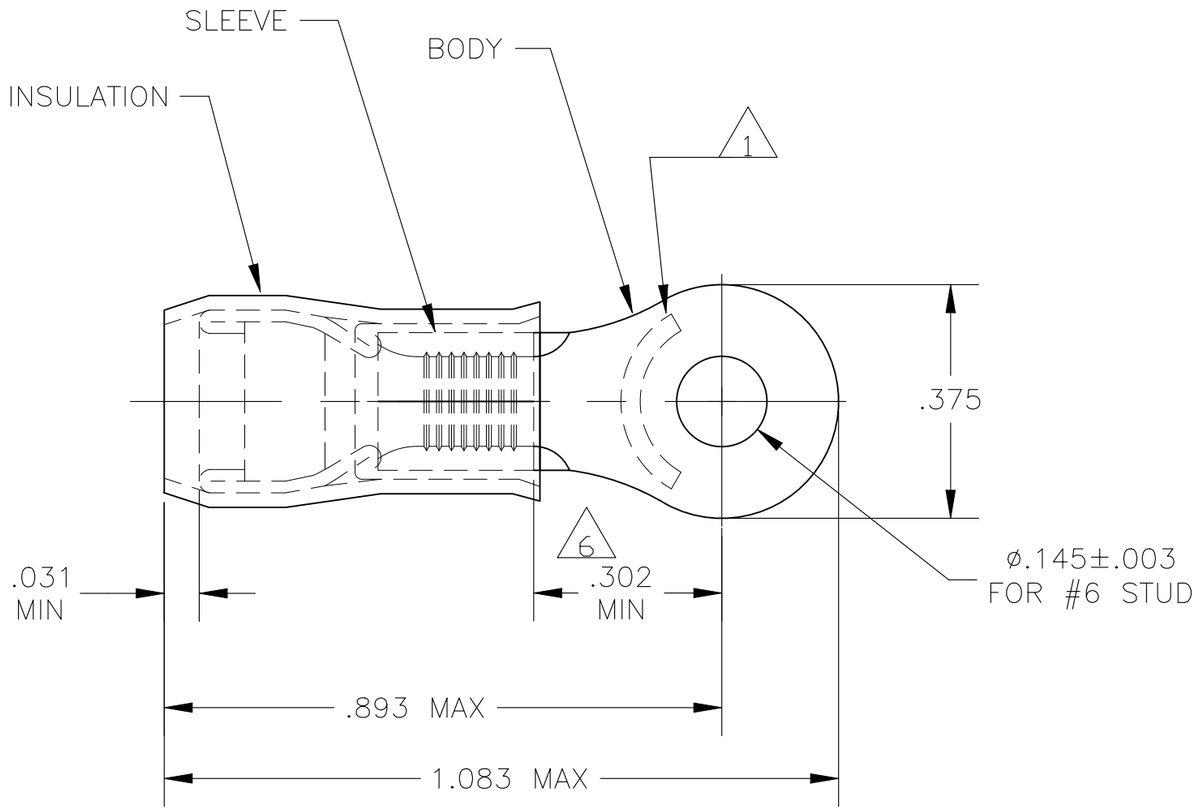

1. STAMP "AMP 12-10*" APPROX AS SHOWN
2. WIRE INSULATION DIA: .150-.250
3. TONGUE MATERIAL THK: .040±.002
4. BODY & SLEEVE: TIN PLATE .000100 MIN EXT. THK PER ASTM B545
5. BODY & SLEEVE- CU PER ASTM B152
   INSULATION - NYLON PER ASTM D4066
   COLOR - YELLOW
6. APPLIES FROM EDGE OF METAL WIRE BARREL TO CENTER OF STUD HOLE.
7. MEETS MS25036-111, CLASS 1
8. NOTE DELETED

QTY	PACKAGE TYPE	PART NO
50	LOOSE PIECE, BOX	8-35107-2
1 KIT = 100 PIECES	LOOSE PIECE	6-35107-0
2500	ON TAPE & REEL	2-35107-1
---	LOOSE PIECE	7 35107

CUSTOMER SERVICE SYSTEMS

FOR ADDITIONAL PRODUCT INFORMATION OR COPIES OF DRAWINGS AND TECHNICAL DOCUMENTS	PRODUCT INFORMATION CENTER 1-800-522-6752
FOR APPLICATION TOOLING INFORMATION	TOOLING ASSISTANCE CENTER 1-800-722-1111
FOR ORDER ENTRY	1-800-526-5142

MAX RECOMMENDED OPERATING TEMPERATURE: 105°C MAX

VOLTAGE RATING: 300 VOLT MAX

CIRCULAR MIL AREA: 2.62-6.64mm² [5,180-13,100] STRANDED OR SOLID

THIS DRAWING IS A CONTROLLED DOCUMENT.

DIMENSIONS: INCHES

TOLERANCES UNLESS OTHERWISE SPECIFIED:
0 PLC ± -
1 PLC ± -
2 PLC ± -
3 PLC ± .008
4 PLC ± -
ANGLES ± -

MATERIAL - 5

FINISH 4

DWN	JR RUTH	16DEC09
CHK	T MICHIELUTTI	16DEC09
APVD	T MICHIELUTTI	16DEC09
PRODUCT SPEC	—	
APPLICATION SPEC	—	
WEIGHT	—	

TE Connectivity

NAME: TERMINAL, RING TONGUE, PIDG, WIRE SIZE: 12-10 AWG

SIZE	CAGE CODE	DRAWING NO	RESTRICTED TO
A3	00779	C-35107	—

CUSTOMER DRAWING | SCALE 4:1 | SHEET 1 OF 1 | REV F6

1470-19 (1/15)