© – TE Connectivity. All Rights Reserved.

REVISIONS					
P	LTR	DESCRIPTION	DATE	DWN	APVD
	M6	ECR-25-266219	22DEC2025	ABS	PS

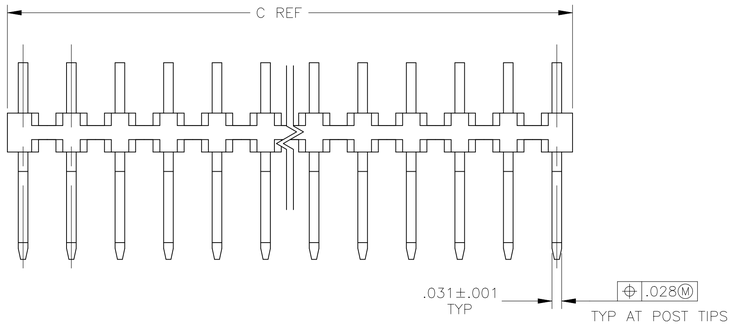

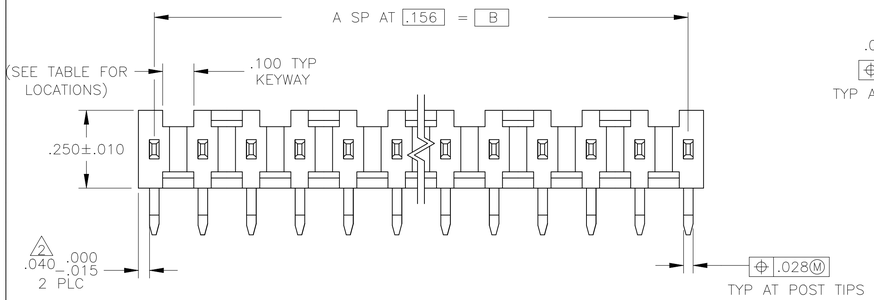

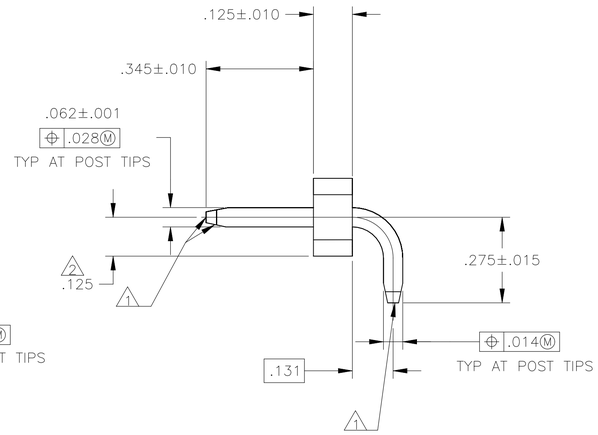

1. THE TIPS OF THE POSTS WILL NOT BE PLATED
2. THE NOTED DIMENSIONS APPLY AT THE INTERSECTION OF THE POST AND THE HOUSING
3. .000050–.000150 BRIGHT TIN LEAD.
4. .000050–.000150 MATTE TIN.
5. ROHS /95 /EC/ COMPLIANT
6. OBSOLETE PARTS: OBSOLETE CIS STREAMLINING PER D.RENAUD/D.SINISI

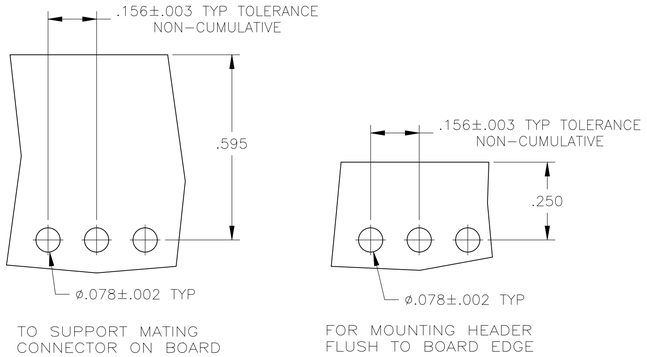

RECOMMENDED BOARD LAYOUTS

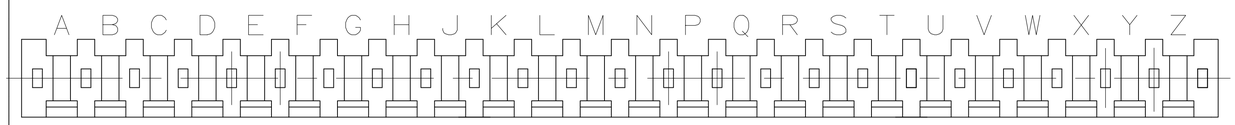

KEYWAY LOCATIONS (REF–SEE TABLE)
(MATING LENGTH OF POST ON NEAR SIDE)
SCALE 8:1

FINISH	KEYWAY LOCATIONS	NO OF KEYWAY	C	B	A	NO OF POSN	ASSEMBLY PART NUMBER
	4 A,C,E,H,K,M,Q,S,U,W,Y	11	3.855	3.744	24	25	5 7-87655-5
	4 A,C,E,G,J,L,N,Q,S,U,W,Y	12	3.699	3.588	23	24	5 7-87655-4
	4 A,D,G,K,N,R,U,X	8	3.543	3.432	22	23	5 7-87655-3
	4 A,C,E,G,J,L,N,Q,S,U,W	11	3.387	3.276	21	22	5 7-87655-2
	4 A,D,G,K,N,R,U	7	3.231	3.120	20	21	5 7-87655-1
	4 A,C,E,G,J,L,N,Q,S,U	10	3.075	2.964	19	20	5 7-87655-0
	4 B,D,F,J,L,N,Q,S	8	2.919	2.808	18	19	5 6-87655-9
6 OBSOLETE	4 A,D,F,J,M,P,S	7	2.763	2.652	17	18	5 6-87655-8
	4 A,D,G,K,N,R	6	2.607	2.496	16	17	5 6-87655-7
	4 A,C,E,G,J,L,N,Q	8	2.451	2.340	15	16	5 6-87655-6
	4 A,D,G,K,N	5	2.295	2.184	14	15	5 6-87655-5
6 OBSOLETE	4 A,C,E,G,J,L,N	7	2.139	2.028	13	14	5 ~~6-87655-4~~
6 OBSOLETE	4 A,D,J,M	4	1.983	1.872	12	13	5 6-87655-3
6 OBSOLETE	4 A,C,E,G,J,L	6	1.827	1.716	11	12	5 6-87655-2
6 OBSOLETE	4 A,D,G,K	4	1.671	1.560	10	11	5 6-87655-1
OBSOLETE	4 A,C,E,G,J	5	1.515	1.404	9	10	5 6-87655-0
OBSOLETE	4 A,D,G	3	1.359	1.248	8	9	5 5-87655-9
6 OBSOLETE	4 A,C,E,G	4	1.203	1.092	7	8	5 5-87655-8
6 OBSOLETE	4 A,C,E	3	1.047	.936	6	7	5 5-87655-7
OBSOLETE	4 A,C,E	3	.891	.780	5	6	5 5-87655-6
6 OBSOLETE	4 A,D	2	.735	.624	4	5	5 5-87655-5
OBSOLETE	4 A,C	2	.579	.468	3	4	5 5-87655-4
OBSOLETE	4 A	1	.423	.312	2	3	5 5-87655-3
	4 A	1	.267	.156	1	2	5 5-87655-2
6 OBSOLETE	3 A,C,E,H,K,M,Q,S,U,W,Y	11	3.855	3.744	24	25	2-87655-5
6 OBSOLETE	3 A,C,E,G,J,L,N,Q,S,U,W,Y	12	3.699	3.588	23	24	2-87655-4
	3 A,D,G,K,N,R,U,X	8	3.543	3.432	22	23	2-87655-3
	3 A,C,E,G,J,L,N,Q,S,U,W	11	3.387	3.276	21	22	2-87655-2
	3 A,D,G,K,N,R,U	7	3.231	3.120	20	21	2-87655-1
	3 A,C,E,G,J,L,N,Q,S,U	10	3.075	2.964	19	20	2-87655-0
	3 B,D,F,J,L,N,Q,S	8	2.919	2.808	18	19	1-87655-9
6 OBSOLETE	3 A,D,F,J,M,P,S	7	2.763	2.652	17	18	1-87655-8
	3 A,D,G,K,N,R	6	2.607	2.496	16	17	1-87655-7
	3 A,C,E,G,J,L,N,Q	8	2.451	2.340	15	16	1-87655-6
	3 A,D,G,K,N	5	2.295	2.184	14	15	1-87655-5
	3 A,C,E,G,J,L,N	7	2.139	2.028	13	14	1-87655-4
	3 A,D,J,M	4	1.983	1.872	12	13	1-87655-3
6 OBSOLETE	3 A,C,E,G,J,L	6	1.827	1.716	11	12	1-87655-2
6 OBSOLETE	3 A,D,G,K	4	1.671	1.560	10	11	1-87655-1
6 OBSOLETE	3 A,C,E,G,J	5	1.515	1.404	9	10	1-87655-0
6 OBSOLETE	3 A,D,G	3	1.359	1.248	8	9	87655-9
6 OBSOLETE	3 A,C,E,G	4	1.203	1.092	7	8	87655-8
6 OBSOLETE	3 A,C,E	3	1.047	.936	6	7	87655-7
6 OBSOLETE	3 A,C,E	3	.891	.780	5	6	87655-6
6 OBSOLETE	3 A,D	2	.735	.624	4	5	87655-5
6 OBSOLETE	3 A,C	2	.579	.468	3	4	87655-4
6 OBSOLETE	3 A	1	.423	.312	2	3	87655-3
6 OBSOLETE	3 A	1	.267	.156	1	2	87655-2

THIS DRAWING IS A CONTROLLED DOCUMENT.

DIMENSIONS: INCHES

TOLERANCES, UNLESS OTHERWISE SPECIFIED:
0 PLC ± –
1 PLC ± –
2 PLC ± –
3 PLC ± .005
4 PLC ± –
ANGLES ± –

MATERIAL
HOUSING FLAME RETARDANT THERMOPLASTIC, COLOR – BLACK
POSTS – BRASS

FINISH
SEE TABLE

DWN L A MAYER 14JUL87
CHK J SCHIEFER 14JUL87
APVD J SCHIEFER 14JUL87

PRODUCT SPEC
108-25016
APPLICATION SPEC
–
WEIGHT

TE Connectivity

NAME
AMPMODU MOD I, HEADER ASSEMBLY
RIGHT ANGLE, SINGLE ROW,
.156 CL

SIZE	CAGE CODE	DRAWING NO	RESTRICTED TO
A1	00779	C-87655	–

CUSTOMER DRAWING
SCALE 4:1 SHEET 1 OF 1 REV M6

4805 (1/15)