SPECIFICATIONS:

A. MATERIAL:
   (1). SCREW: STEEL.
   (2). COVER: NYLON 66 (UL94V-0)
   (3). TERMINAL: PHOSPHOR BRONZE
   (4). CAGE (*): BRASS
   (5). BODY: NYLON 66 (UL94V-0)
   (6). SCREW: STEEL
B. PRODUCT SPECIFICATION: PS-39500-001
C. WIRE RANGE: 30 - 12AWG
D. TORQUE: 5 in-lbs
E. WIRE STRIP LENGTH: 6.50/.256
F. NUMBER OF CIRCUIT POSITIONS AVAILABLE = 2 THROUGH 24
G. ASSEMBLY IS ROHS COMPLIANT BY EXEMPTION
   COMPONENTS MARKED WITH AN ASTERISK (*) ARE ROHS COMPLIANT BY EXEMPTION, ALL OTHERS ARE ROHS COMPLIANT

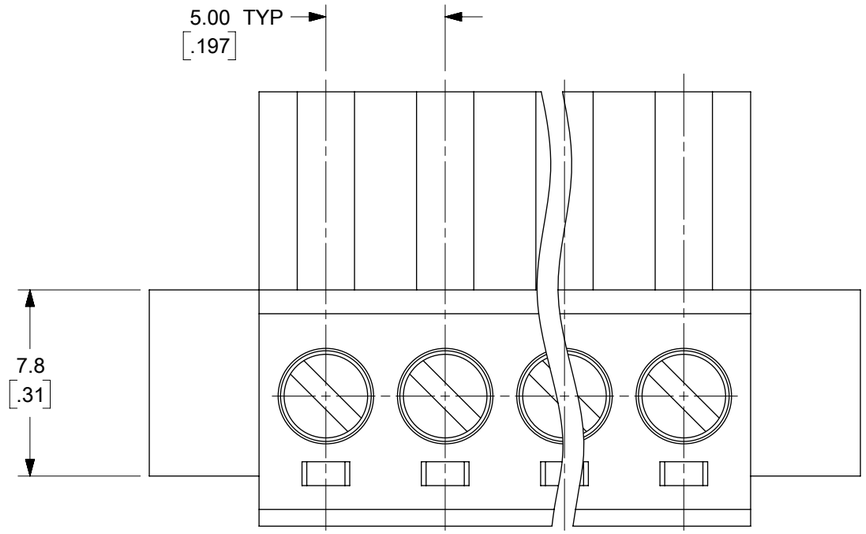

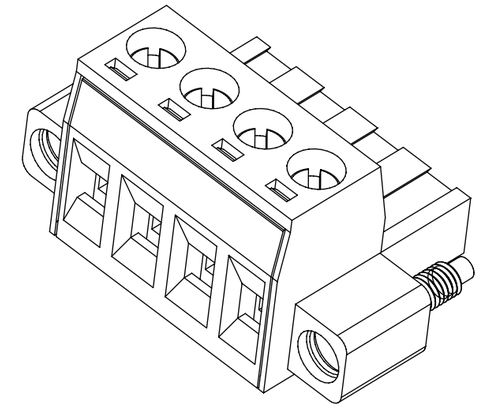

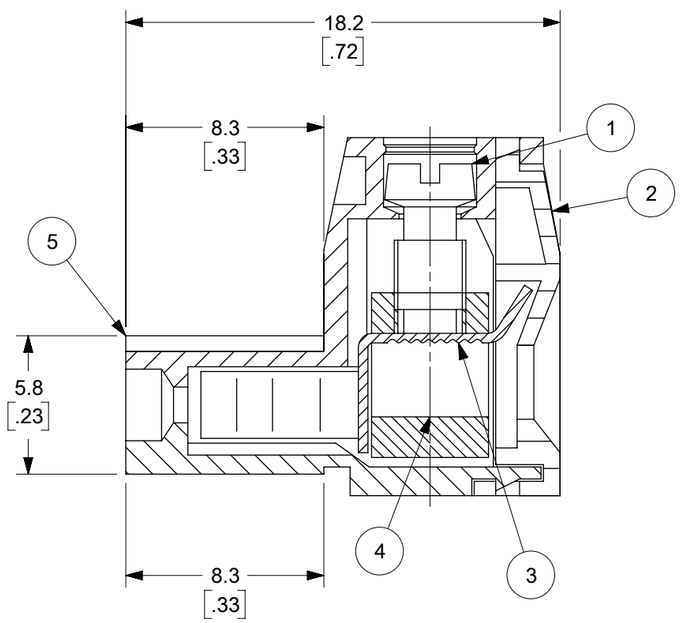

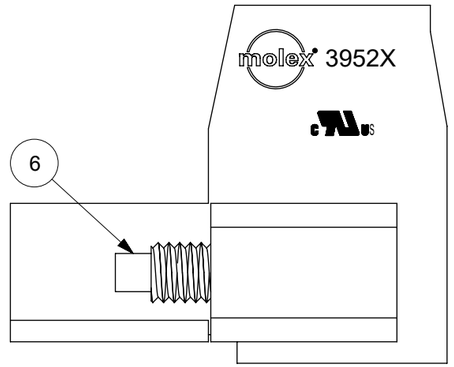

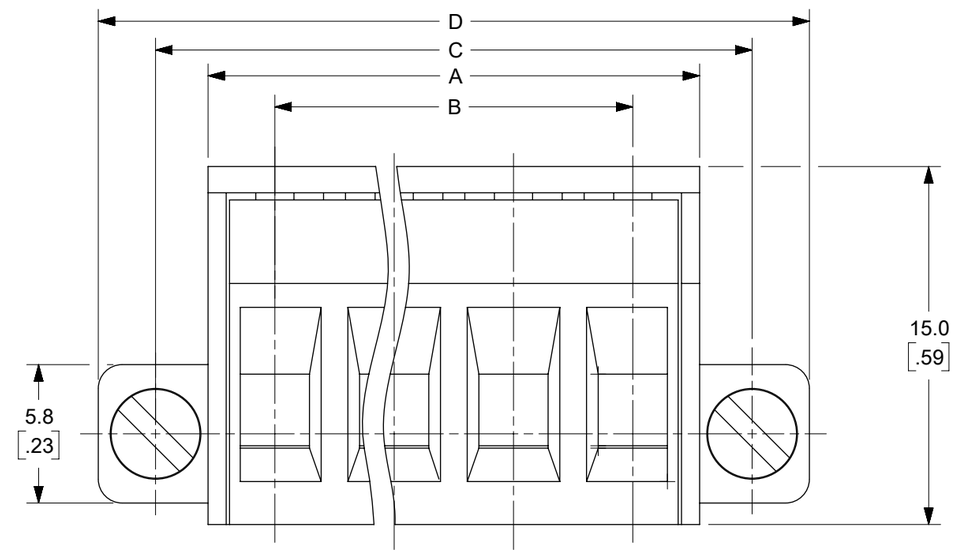

TOLERANCES			
MM	TOL	INCH	TOL
0-6	±0.25	0-.24	±.010
>6-30	±0.40	.24-1.18	±.016
>30-120	±0.50	1.18-4.76	±.020
>120	±0.80	>4.76	±.031

THIS DRAWING CONTAINS INFORMATION THAT IS PROPRIETARY TO MOLEX ELECTRONIC TECHNOLOGIES, LLC AND SHOULD NOT BE USED WITHOUT WRITTEN PERMISSION

FUNCTIONAL SYMBOLS: EA = 0; EC = 0; EP = 0

DIVISIONAL SYMBOLS

DIMENSION UNITS: INCH/MM
SCALE: 4:1

GENERAL TOLERANCES (UNLESS SPECIFIED)

	MM	INCH
4 PLACES	±	±
3 PLACES	±	±
2 PLACES	±	±
1 PLACE	±	±
0 PLACES	±	±
ANGULAR TOL	± 1.5 °	

DRAFT WHERE APPLICABLE MUST REMAIN WITHIN DIMENSIONS

CURRENT REV DESC: SALES DRAWING REVISION C3 (VERSIONS 001 AND 002) HAS BEEN UPDATED TO REVISION C4. VERSION 001 OF C4 CONSISTS OF 2 SHEETS, AND VERSION 002 OF C3 HAS BEEN VOIDED.

EC NO: 843353
DRWN: MARUTD 2025/12/18
CHK'D: ROLANM 2026/01/06
APPR: HKNEELAND 2026/01/06

INITIAL REVISION:
DRWN: LROTHAUS 2006/01/09
APPR: JPAWLICK 2006/01/10

THIRD ANGLE PROJECTION

DRAWING: B-SIZE
SERIES: 39524

molex

5.0MM, EURO PLUG,
RIGHT ANGLE, MOUNTING ENDS

PRODUCT CUSTOMER DRAWING

DOCUMENT NUMBER	DOC TYPE	DOC PART	REVISION
SD-39524-001	PSD	001	C4

MATERIAL NUMBER	CUSTOMER	SHEET NUMBER
SEE SHEET-2	GENERAL MARKET	1 OF 2

DOCUMENT STATUS	P1	RELEASE DATE	2026/01/06 23:47:30

FORMAT: Eng-lega-mech-prod-B
REVISION: E1
DATE: 2021/05/01

Circuit size	Material Numbers												Dimensional Information							
	Black						Green													
	100%Tin			30u" Gold			100%Tin			30u" Gold										
	Printing Options			Printing Options			Printing Options			Printing Options			Dim.A		Dim.B		Dim.C		Dim.D	
	None	10A	11A	None	10A	11A	None	10A	11A	None	10A	11A	mm	inch	mm	inch	mm	inch	mm	inch
2	395240002	395240102	395240202	395240502	395240602	395240702	395245002	395245102	395245202	395245502	395245602	395245702	10.00	0.394	5.00	0.197	15.00	0.591	19.80	0.780
3	395240003	395240103	395240203	395240503	395240603	395240703	395245003	395245103	395245203	395245503	395245603	395245703	15.00	0.591	10.00	0.394	20.00	0.787	24.80	0.976
4	395240004	395240104	395240204	395240504	395240604	395240704	395245004	395245104	395245204	395245504	395245604	395245704	20.00	0.787	15.00	0.591	25.00	0.984	29.80	1.173
5	395240005	395240105	395240205	395240505	395240605	395240705	395245005	395245105	395245205	395245505	395245605	395245705	25.00	0.984	20.00	0.787	30.00	1.181	34.80	1.370
6	395240006	395240106	395240206	395240506	395240606	395240706	395245006	395245106	395245206	395245506	395245606	395245706	30.00	1.181	25.00	0.984	35.00	1.378	39.80	1.567
7	395240007	395240107	395240207	395240507	395240607	395240707	395245007	395245107	395245207	395245507	395245607	395245707	35.00	1.378	30.00	1.181	40.00	1.575	44.80	1.764
8	395240008	395240108	395240208	395240508	395240608	395240708	395245008	395245108	395245208	395245508	395245608	395245708	40.00	1.575	35.00	1.378	45.00	1.772	49.80	1.961
9	395240009	395240109	395240209	395240509	395240609	395240709	395245009	395245109	395245209	395245509	395245609	395245709	45.00	1.772	40.00	1.575	50.00	1.969	54.80	2.157
10	395240010	395240110	395240210	395240510	395240610	395240710	395245010	395245110	395245210	395245510	395245610	395245710	50.00	1.969	45.00	1.772	55.00	2.165	59.80	2.354
11	395240011	395240111	395240211	395240511	395240611	395240711	395245011	395245111	395245211	395245511	395245611	395245711	55.00	2.165	50.00	1.969	60.00	2.362	64.80	2.551
12	395240012	395240112	395240212	395240512	395240612	395240712	395245012	395245112	395245212	395245512	395245612	395245712	60.00	2.362	55.00	2.165	65.00	2.559	69.80	2.748
13	395240013	395240113	395240213	395240513	395240613	395240713	395245013	395245113	395245213	395245513	395245613	395245713	65.00	2.559	60.00	2.362	70.00	2.756	74.80	2.945
14	395240014	395240114	395240214	395240514	395240614	395240714	395245014	395245114	395245214	395245514	395245614	395245714	70.00	2.756	65.00	2.559	75.00	2.953	79.80	3.142
15	395240015	395240115	395240215	395240515	395240615	395240715	395245015	395245115	395245215	395245515	395245615	395245715	75.00	2.953	70.00	2.756	80.00	3.150	84.80	3.339
16	395240016	395240116	395240216	395240516	395240616	395240716	395245016	395245116	395245216	395245516	395245616	395245716	80.00	3.150	75.00	2.953	85.00	3.346	89.80	3.535
17	395240017	395240117	395240217	395240517	395240617	395240717	395245017	395245117	395245217	395245517	395245617	395245717	85.00	3.346	80.00	3.150	90.00	3.543	94.80	3.732
18	395240018	395240118	395240218	395240518	395240618	395240718	395245018	395245118	395245218	395245518	395245618	395245718	90.00	3.543	85.00	3.346	95.00	3.740	99.80	3.929
19	395240019	395240119	395240219	395240519	395240619	395240719	395245019	395245119	395245219	395245519	395245619	395245719	95.00	3.740	90.00	3.543	100.00	3.937	104.80	4.126
20	395240020	395240120	395240220	395240520	395240620	395240720	395245020	395245120	395245220	395245520	395245620	395245720	100.00	3.937	95.00	3.740	105.00	4.134	109.80	4.323
21	395240021	395240121	395240221	395240521	395240621	395240721	395245021	395245121	395245221	395245521	395245621	395245721	105.00	4.134	100.00	3.937	110.00	4.331	114.80	4.520
22	395240022	395240122	395240222	395240522	395240622	395240722	395245022	395245122	395245222	395245522	395245622	395245722	110.00	4.331	105.00	4.134	115.00	4.528	119.80	4.717
23	395240023	395240123	395240223	395240523	395240623	395240723	395245023	395245123	395245223	395245523	395245623	395245723	115.00	4.528	110.00	4.331	120.00	4.724	124.80	4.913
24	395240024	395240124	395240224	395240524	395240624	395240724	395245024	395245124	395245224	395245524	395245624	395245724	120.00	4.724	115.00	4.528	125.00	4.921	129.80	5.110

THIS DRAWING CONTAINS INFORMATION THAT IS PROPRIETARY TO MOLEX ELECTRONIC TECHNOLOGIES, LLC AND SHOULD NOT BE USED WITHOUT WRITTEN PERMISSION

FUNCTIONAL SYMBOLS: E/A = 0; E/C = 0; E/P = 0

DIVISIONAL SYMBOLS

DIMENSION UNITS: INCH/MM

SCALE: 1:1

GENERAL TOLERANCES (UNLESS SPECIFIED)

	MM	INCH
4 PLACES	±	±
3 PLACES	±	±
2 PLACES	±	±
1 PLACE	±	±
0 PLACES	±	±
ANGULAR TOL	± 1.5 °	

DRAFT WHERE APPLICABLE MUST REMAIN WITHIN DIMENSIONS

CURRENT REV DESC: SALES DRAWING REVISION C3 (VERSIONS 001 AND 002) HAS BEEN UPDATED TO REVISION C4. VERSION 001 OF C4 CONSISTS OF 2 SHEETS, AND VERSION 002 OF C3 HAS BEEN VOIDED.

EC NO: 843353

DRWN:	MARUTD	2025/12/18
CHK'D:	ROLANM	2026/01/06
APPR:	HKNEELAND	2026/01/06

INITIAL REVISION:

DRWN:	LROTHAUS	2006/01/09
APPR:	JPAWLICK	2006/01/10

THIRD ANGLE PROJECTION

DRAWING: B-SIZE

SERIES: 39524

molex

5.0MM, EURO PLUG, RIGHT ANGLE, MOUNTING ENDS

PRODUCT CUSTOMER DRAWING

DOCUMENT NUMBER	DOC TYPE	DOC PART	REVISION
SD-39524-001	PSD	001	C4

MATERIAL NUMBER	CUSTOMER	SHEET NUMBER
SEE TABLE	GENERAL MARKET	2 OF 2

DOCUMENT STATUS	P1	RELEASE DATE	2026/01/06 23:47:30

FORMAT: Eng-lega-master-tb-prod-B
REVISION: E1
DATE: 2021/05/01