© TE Connectivity. All Rights Reserved.

REVISIONS					
P	LTR	DESCRIPTION	DATE	DWN	APVD
	AD	REVISED PER ECR-25-253035	14NOV2025	CKN	JP

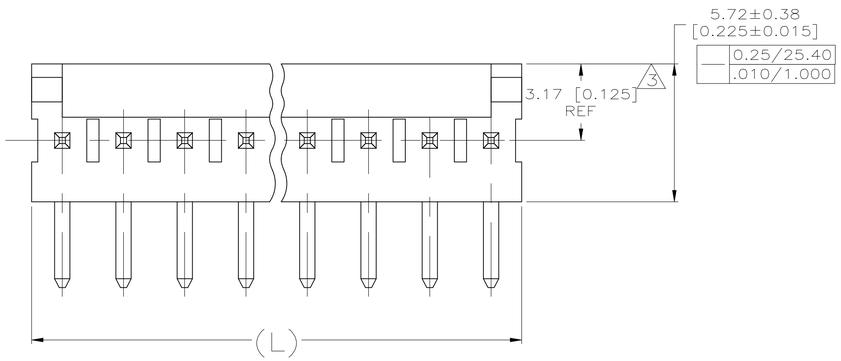

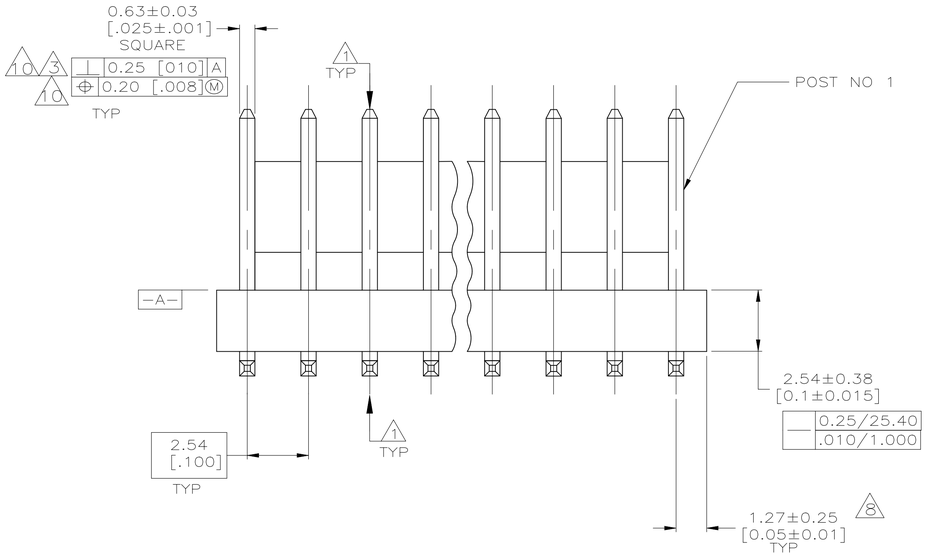

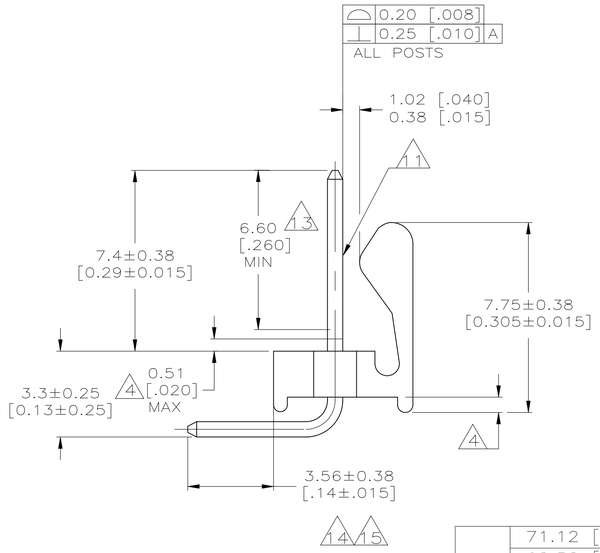

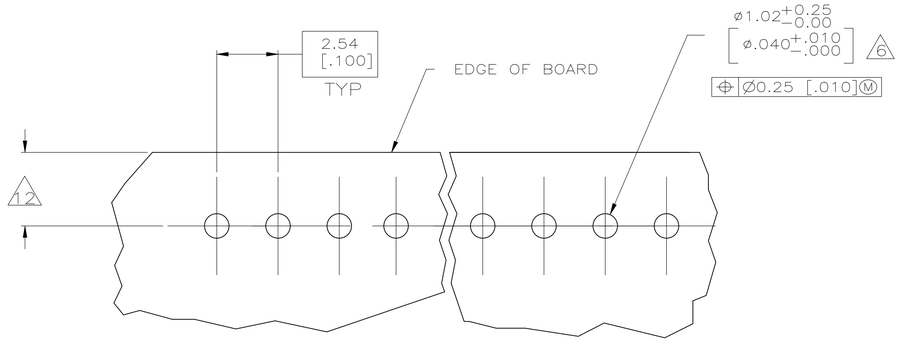

RECOMMENDED MOUNTING HOLE PATTERN
FOR 1.60 [.063] THICK P.C. BOARD (2)

(17) OBSOLETE PART NUMBER

(1) POST TO WITHSTAND 13 NEWTONS (3 LBS) MINIMUM AXIAL FORCE IN BOTH DIRECTIONS SHOWN WITHOUT DISLODGING.

(2) TOLERANCES APPLY TO SOLDER SIDE OF BOARD.

(3) MEASURED AT -A-

(4) PLASTIC FLASH PERMITTED IN THIS AREA.

5 PARTS COMPLY WITH AMP SOLDERABILITY SPEC. NO. 109-11-2.

(6) ONE HOLE MAY BE UNDERSIZED 0.81-0.89 [.032-.035] DIA. FOR ASSEMBLY RETENTION DURING WAVE SOLDERING.

(7) MATERIAL: HEADER-THERMOPLASTIC POLYESTER 94V-0 (NATURAL)
POST-COPPER ALLOY
FINISH-USE PLATING NOTES 13 & 14 FOR -2 THRU -28 AND NOTES 13 & 15 FOR -32 THRU -58

(8) COORDINATE DIMENSION APPLIES FROM CENTER OF ACTUAL FEATURE.

9 PLASTIC BURRS CAUSED BY CUT-OFF TOOLING ARE PERMITTED WITHIN THE MAXIMUM TOLERANCE ENVELOPE.

(10) POSTS TO BE MEASURED WHEN STRIP IS HELD FLAT.

(11) POST MUST WITHSTAND TWO 90° BENDS AGAINST EXTRUSION WITHOUT BREAKING.

(12) DIMENSION SHOULD BE 2.79-4.06 [.110-.160] MIN WHEN MATING WITH A MTA-100 CONNECTOR ASSEMBLY OR 2.79-3.05 [.110-.120] WHEN MATING WITH A CST-100 CONNECTOR ASSEMBLY.

(13) PLATING: GOLD PLATE AREA, 0.00038 [.000015] GOLD OR 0.00008 [.000003] MIN GOLD FLASH OVER 0.00030 [.000012] PALLADIUM NICKEL ONLY IN FUNCTIONAL CONTACT AREA AND OTHER AREAS WITH OPTIMIZED THICKNESS PER TE CONNECTIVITY'S DISCRETION, ALL SIDES, OVER NICKEL UNDERPLATE, 0.00127 [.000050] MIN, ALL SIDES AND ENTIRE LENGTH OF POST.

(14) PLATING: MATTE TIN PLATE AREA,0.00381-0.00889 [.000150-.000350] THICK, ALL FOUR SIDES 3.56 [.140] MINIMUM.

(15) PLATING: MATTE TIN PLATE AREA, 0.00381-0.00889 [.000150-.000350] THICK, ALL FOUR SIDES 3.56 [.140] MINIMUM.

(16) OBSOLETE PARTS: OBSOLETE CIS STREAMLINING PER D.RENAUD/D.SINISI

	DIM (L)	NO.OF POSN	ASSEMBLY
LEAD FREE	71.12 [2.800]	28	5-641127-8
	68.58 [2.700]	27	5-641127-7
	66.04 [2.600]	26	5-641127-6
	63.50 [2.500]	25	5-641127-5
	60.96 [2.400]	24	5-641127-4
	58.42 [2.300]	23	5-641127-3
	55.88 [2.200]	22	5-641127-2
	53.34 [2.100]	21	5-641127-1
	50.80 [2.000]	20	5-641127-0
	48.26 [1.900]	19	4-641127-9
	45.72 [1.800]	18	4-641127-8
	43.18 [1.700]	17	4-641127-7
	40.64 [1.600]	16	4-641127-6
	38.10 [1.500]	15	4-641127-5
	35.56 [1.400]	14	4-641127-4
	33.02 [1.300]	13	4-641127-3
	30.48 [1.200]	12	4-641127-2
	27.94 [1.100]	11	4-641127-1
	25.40 [1.000]	10	4-641127-0
	22.86 [.900]	9	3-641127-9
	20.32 [.800]	8	3-641127-8
	17.78 [.700]	7	3-641127-7
	15.24 [.600]	6	3-641127-6
	12.70 [.500]	5	3-641127-5
	10.16 [.400]	4	3-641127-4
	7.62 [.300]	3	3-641127-3
	5.08 [.200]	2	3-641127-2

	DIM (L)	NO.OF POSN	ASSEMBLY	
LEAD FREE	71.12 [2.800]	28	2-~~641127-8~~ (16)	SUPERSEDED BY 5-641127-8
	68.58 [2.700]	27	2-~~641127-7~~ (16)	SUPERSEDED BY 5-641127-7
	66.04 [2.600]	26	2-~~641127-6~~ (16)	SUPERSEDED BY 5-641127-6
	63.50 [2.500]	25	2-~~641127-5~~ (16)	SUPERSEDED BY 5-641127-5
	60.96 [2.400]	24	2-~~641127-4~~ (16)	SUPERSEDED BY 5-641127-4
	58.42 [2.300]	23	2-~~641127-3~~ (16)	SUPERSEDED BY 5-641127-3
	55.88 [2.200]	22	2-~~641127-2~~ (16)	SUPERSEDED BY 5-641127-2
	53.34 [2.100]	21	2-~~641127-1~~ (16)	SUPERSEDED BY 5-641127-1
	50.80 [2.000]	20	2-~~641127-0~~ (16)	SUPERSEDED BY 5-641127-0
	48.26 [1.900]	19	1-~~641127-9~~ (16)	SUPERSEDED BY 4-641127-9
	45.72 [1.800]	18	1-~~641127-8~~ (16)	SUPERSEDED BY 4-641127-8
	43.18 [1.700]	17	~~1-641127-7~~ (16)	SUPERSEDED BY 4-641127-7
	40.64 [1.600]	16	~~1-641127-6~~ (17)	
	38.10 [1.500]	15	1-~~641127-5~~ (16)	SUPERSEDED BY 4-641127-5
	35.56 [1.400]	14	1-~~641127-4~~ (16)	SUPERSEDED BY 4-641127-4
	33.02 [1.300]	13	1-~~641127-3~~ (16)	SUPERSEDED BY 4-641127-3
	30.48 [1.200]	12	~~1-641127-2~~ (17)	
	27.94 [1.100]	11	1-~~641127-1~~ (16)	SUPERSEDED BY 4-641127-1
	25.40 [1.000]	10	1-~~641127-0~~ (16)	SUPERSEDED BY 4-641127-0
	22.86 [.900]	9	~~641127-9~~ (17)	
	20.32 [.800]	8	~~641127-8~~ (16)	SUPERSEDED BY 3-641127-8
	17.78 [.700]	7	~~641127-7~~ (16)	SUPERSEDED BY 3-641127-7
	15.24 [.600]	6	~~641127-6~~ (16)	
	12.70 [.500]	5	~~641127-5~~ (17)	
	10.16 [.400]	4	~~641127-4~~ (17)	
	7.62 [.300]	3	~~641127-3~~ (17)	
	5.08 [.200]	2	~~641127-2~~ (17)	

THIS DRAWING IS A CONTROLLED DOCUMENT.

DIMENSIONS: mm [INCHES]

TOLERANCES UNLESS OTHERWISE SPECIFIED:
0 PLC ±
1 PLC ±
2 PLC ± 0.13 [.005]
3 PLC ±
4 PLC ±
ANGLES ±

MATERIAL (7)
FINISH (7)

DWN S. HOOVER 26-JAN-2005
CHK D. BOSSI 26-JAN-2005
APVD D. BOSSI 26-JAN-2005
PRODUCT SPEC
APPLICATION SPEC
WEIGHT 0.000000
CUSTOMER DRAWING

TE Connectivity

NAME: MTA-100 HDR ASSY, F/L, NOTCHED, .025 SQ R/A POST, .000015 AU PLATED

SIZE	CAGE CODE	DRAWING NO	RESTRICTED TO
A1	00779	C-641127	

SCALE 8:1 SHEET 1 OF 1 REV AD

4805 (1/15)