DATE	REV.	ECN	APP'D BY
03-25-19	X0	-	RC
08-08-19	A0	-	ADB
08-15-19	A1	11436	ADB
01-02-20	A2	11490	JE
5-15-20	A3	11552	JE

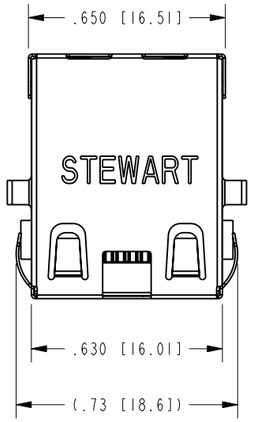

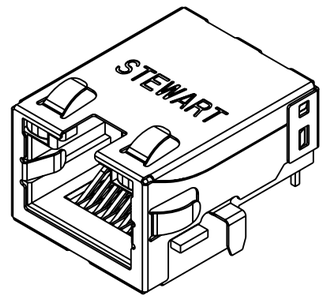

ISOMETRIC VIEW

LED POLARITY
(ENLARGED VIEW)

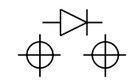

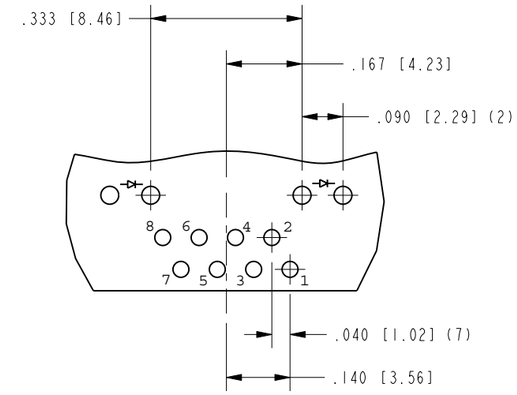

DETAIL A
SCALE 3.000

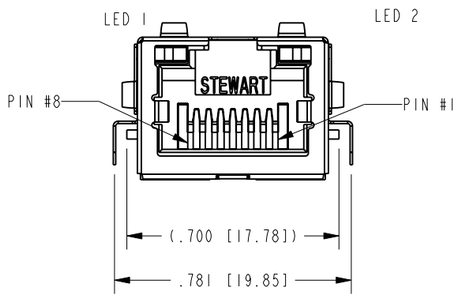

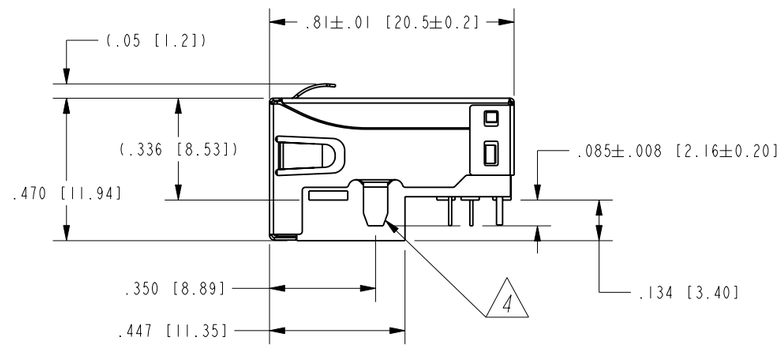

AVAILABLE LED SPECIFICATIONS			
STANDARD LED	WAVELENGTH	FORWARD V (MAX)	*(TYP)
YELLOW	590 nm	2.5 V	2.1 V
GREEN	565 nm	2.5 V	2.2 V

*WITH A FORWARD CURRENT OF 20 mA (TYP)

NOTES:

1. CONNECTOR MATERIALS:
   HOUSING: HALOGEN FREE THERMOPLASTIC UL94 V-0
   CONTACTS: COPPER ALLOY
   SHIELD: STAINLESS STEEL
   CONTACT PLATING: SELECTIVE GOLD IN CONTACT AREA
   (SEE CHART FOR PART NUMBER)
   MATTE TIN PLATED SOLDER TAILS
2. FOR PRODUCT SPECIFICATIONS SEE PR022-01.
3. DIMENSIONS AND TOLERANCES COMPLY WITH TIA-1096 STANDARD.
4. SHIELD LEADS (2) ARE TIN DIPPED TO .010 MIN ABOVE TOP SURFACE OF PRINTED CIRCUIT BOARD SEATING PLANE.
5. DESIGNED FOR CATEGORY 5/5E APPLICATIONS.

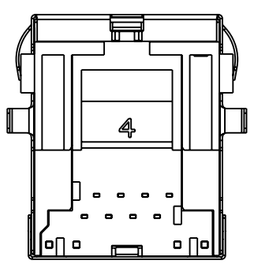

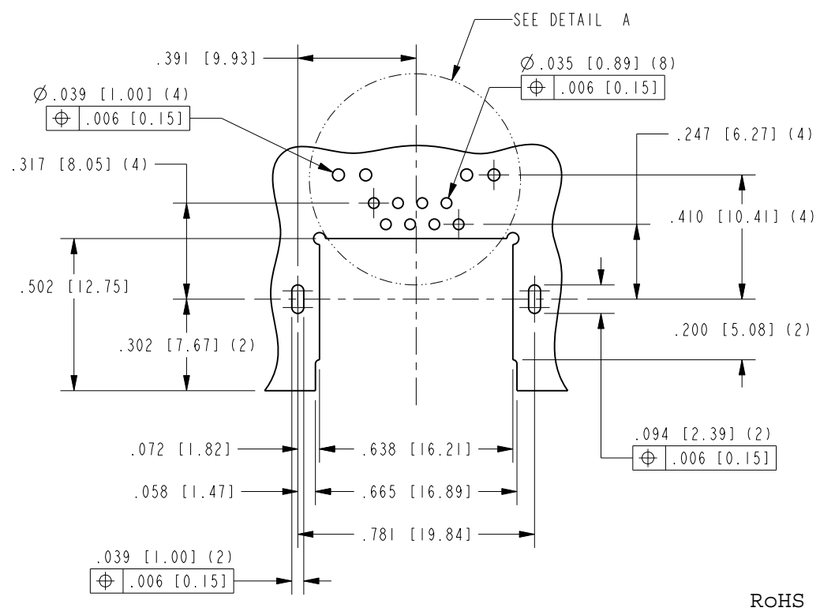

P.C.B. RECOMMENDED HOLE LAYOUT
SEEN FROM COMPONENT SIDE
ALL CENTERLINE DIMENSIONS ARE BASIC

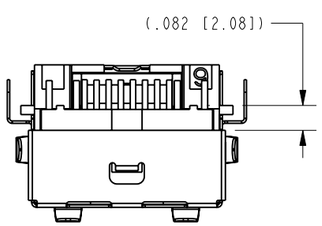

RoHS

50 MICRO-INCHES [1.27um]	YELLOW	GREEN	SS-74800-139
CONTACT PLATING IN MATING AREA	LED 1	LED 2	PART NUMBER

THIRD ANGLE PROJECTION

DO NOT SCALE DRAWING

DRAWING IS SUBJECT TO CHANGE WITHOUT NOTICE

DIMENSIONS: INCHES [METRIC]

UNLESS OTHERWISE SPECIFIED TOLERANCES ARE ±.005 [0.13] ANGLES ARE ±1°

SHEET NO. 1 OF 1

stewart CONNECTOR a bel group
11118 Susquehanna Trail South
Glen Rock, PA 17327-9199
(717) 235-7512
http://www.stewartconnector.com

TITLE: RJ45 SINGLE PORT MIDPLANE JACK WITH YELLOW/GREEN LEDS, HALOGEN FREE MAERIAL

THIS DRAWING AND THE SUBJECT MATTER SHOWN THEREON ARE CONFIDENTIAL AND THE PROPRIETARY PROPERTY OF STEWART CONNECTOR AND SHALL NOT BE REPRODUCED, COPIED, OR USED IN ANY MANNER WITHOUT PRIOR WRITTEN CONSENT OF STEWART CONNECTOR. ONE OR MORE U.S. PATENTS MAY APPLY TO THIS PRODUCT. FOR DETAILS, PLEASE VISIT: HTTP://BELFUSE.COM/STEWART/STEWART_PATENTS/

DRN BY: ADB	DATE 03-22-19		
APPD BY: RC	DATE 03-25-19		
DWG. NO. CT740265		REV. A3	

Pro/E

Please read our datasheet & drawing disclaimer here.