INDEX	
PAGE TITLE	PAGE
TITLE BLOCK	1
REVISION BLOCK	2
PART BLOCK	3
KPC BLOCK	4
COMPONENT TABLE	5
NOTES	6
NOTES	7
WIRE DRESS PACKAGING DIMENSIONS	8
LOCATION AND PACKAGING DIMENSIONS REFERENCING INTERFACE DATUMS B & C	9
LOCATION AND PACKAGING DIMENSIONS REFERENCING INTERFACE DATUM A	10
KEY ID REF - WIRE DRESS OPTION 0	11
KEY ID REF - WIRE DRESS OPTION 9	12
CIRCUIT CONFIGURATIONS	13
CIRCUIT CONFIGURATIONS	14
COMPONENT CONNECTOR INTERFACE	15
COMPONENT CONNECTOR INTERFACE	16
COMPONENT CONNECTOR INTERFACE	17
COMPONENT CONNECTOR INTERFACE	18
COMPONENT CONNECTOR INTERFACE	19
COMPONENT CONNECTOR INTERFACE	20
COMPONENT CONNECTOR INTERFACE	21

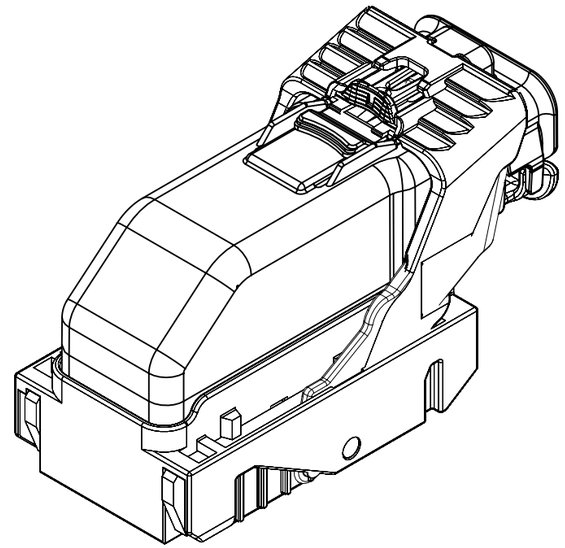

ISO VIEW

GM

UNLESS OTHERWISE SPECIFIED: THIS DOCUMENT IS IN ACCORDANCE WITH ASME Y14.5M-1994 AS AMMENDED BY THE GM GLOBAL DIMENSIONING AND TOLERANCING ADDENDUM-1997. ALL GEOMETRIC TOLERANCES AND RELATED DATUMS APPLY RFS. RULE #1 (PERFECT FORM AT MMC) DOES NOT APPLY WHEN A RELATIONSHIP BETWEEN FEATURES IS ESTABLISHED BY ORIENTATION OR LOCATION TOLERANCES. SEPARATE POSITION CALLOUTS MAY BE GAGED SEPARATELY REGARDLESS OF DATUM REFERENCES.

CHANGE RESTRICTED
NO MANUAL CHANGES

DO NOT SCALE

METRIC

DIMENSIONS SHOWN IN MILLIMETERS UNLESS OTHERWISE SPECIFIED

REFERENCE
12H (MOLEX AUTOMOTIVE)

		DATE
DRAFTER	J SZYMKOWSKI	22DE05
APVD1	D PFAFFINGER	22DE05
APVD2	B BURT	22DE05
APVD3		
APVD4		
APVD5		

DRAWING NAME
HARNESS CONN ASM
66/73/80 CKTS

DRAWING NUMBER
12642695

DWG STATUS		
ST	REV	PDI
R	002	

PAGE NUMBER
1 OF 21

PAGE	DWG STATUS					REVISION HISTORY	AUTH	DR	CK	ENG
	DATE	ST	REV	CHG	PDI					
	19DE11	R	001			RELEASED TO PRODUCTION AT DLS A	CRMRJB	SC	MRO	GF
3	08MY15	R	002	A		REORDERED PART BLOCK AND ADDED MASS CORRECTED P/N TYPO FROM 12562676 TO 12582676				
3, 5		R	002	B		ADDED 12659312, 12659313, 12653574 AND 12653575				
6		R	002	C		REMOVED NOTE 1 . D . 3 . C				
20		R	002	D		DIM 125 WAS 3.25 DIM 131 WAS 5.5	CRMRJD	DFK	MRO	GF

PAGE	DWG STATUS					REVISION HISTORY	AUTH	DR	CK	ENG
	DATE	ST	REV	CHG	PDI					

		PAGE TITLE		DRAWING NUMBER	DWG STATUS			PAGE NUMBER
	GM	REVISION BLOCK		12642695	ST	REV	PDI	2 OF 21
					R	002		

002A 002B

30	RD	12582676			C	003			0.011	WIRE HARNESS COVER	66/73/80 WAY
29	RD	AMJ29214			C	003			0.050	HARN CONN ASM 80 CKT	KEY M OPTION 9
28	RD	AMJ29136			C	003			0.050	HARN CONN ASM 80 CKT	KEY L OPTION 9
27	RD	AMJ29117			C	003			0.050	HARN CONN ASM 80 CKT	KEY K OPTION 9
26	RD	12615657			C	003			0.050	HARN CONN ASM 80 CKT	KEY J OPTION 9
25	RD	12603599			C	003			0.050	HARN CONN ASM 80 CKT	KEY H OPTION 9
24	RD	12603598			C	003			0.050	HARN CONN ASM 80 CKT	KEY G OPTION 9
23	RD	AMJ28669			C	003			0.050	HARN CONN ASM 80 CKT	KEY M OPTION 0
22	RD	AMJ29057			C	003			0.050	HARN CONN ASM 80 CKT	KEY L OPTION 0
21	RD	AMJ28595			C	003			0.050	HARN CONN ASM 80 CKT	KEY K OPTION 0
20	RD	12615656			C	003			0.050	HARN CONN ASM 80 CKT	KEY J OPTION 0
19	RD	12588058			C	004			0.050	HARN CONN ASM 80 CKT	KEY H OPTION 0
18	RD	12588057			C	003			0.050	HARN CONN ASM 80 CKT	KEY G OPTION 0
17	RD	12653575			C	002			0.050	HARN CONN ASM 73 CKT	KEY F OPTION 9
16	RD	AMJ28698			C	003			0.050	HARN CONN ASM 73 CKT	KEY E OPTION 9
15	RD	12647269			C	002			0.050	HARN CONN ASM 73 CKT	KEY D OPTION 9
14	RD	12615655			C	003			0.050	HARN CONN ASM 73 CKT	KEY C OPTION 9
13	RD	12603597			C	005			0.050	HARN CONN ASM 73 CKT	KEY B OPTION 9
12	RD	12603596			C	006			0.050	HARN CONN ASM 73 CKT	KEY A OPTION 9
11	RD	12653574			C	002			0.050	HARN CONN ASM 73 CKT	KEY F OPTION 0
10	RD	AMJ28633			C	003			0.050	HARN CONN ASM 73 CKT	KEY E OPTION 0
09	RD	12647268			C	002			0.050	HARN CONN ASM 73 CKT	KEY D OPTION 0
08	RD	12615654			C	005			0.050	HARN CONN ASM 73 CKT	KEY C OPTION 0
07	RD	12582678			C	008			0.050	HARN CONN ASM 73 CKT	KEY B OPTION 0
06	RD	12582677			C	010			0.050	HARN CONN ASM 73 CKT	KEY A OPTION 0
05	RD	12659313			2	001			0.050	HARN CONN ASM 66 CKT	KEY C OPTION 9
04	RD	12642693			C	002			0.050	HARN CONN ASM 66 CKT	KEY A OPTION 9
03	RD	12659312			2	001			0.050	HARN CONN ASM 66 CKT	KEY C OPTION 0
02	RD	12642692			C	003			0.050	HARN CONN ASM 66 CKT	KEY A OPTION 0
01	RD	12642695		A		002			3.408	HARNESS CONN ASM	
										DRAWING	

HIERARCHY /QUANTITY	DWG ITM	DWG RLTN SHIP	PART NUMBER	P-A ITM	D L S	ST	REV	P D I	N M C I	MASS (KG)	PART NAME	NOTES

PARTS SHOWN ON DRAWING

	PAGE TITLE		DRAWING NUMBER	DWG STATUS			PAGE NUMBER
GM	PART BLOCK		12642695	ST	REV	PDI	3 OF 21
				R	002		

KEY PRODUCT CHARACTERISTICS
(IN ACCORDANCE WITH QN 1805 OR QN 1050)

▽ SAFETY/COMPLIANCE

◇ FIT/FUNCTION

TOTAL ON DRAWING	5
LAST NO. USED	5

NO	TYPE	DESCRIPTION	RATIONALE	PAGE/ZONE
1	F/F	32.68	IMPROVE CONNECTOR SYSTEM MATING	15
2	F/F	29.00	INSURE PROPER RELEASE OF LEVER	15
3	F/F	15.25	INSURE FINAL MATE POSITION	16
5	F/F	POSITIONAL TOLERANCE (2 PLACES)	INSURE CONNECTOR SYSTEM MATEABILITY	19

					APPLICABLE COMPONENTS					
LINE	MFG.	MFG. P/N	GM P/N	EFFECTIVE DATE	DESCRIPTION	KEY OPTION	WIRE DRESS OPTION	KEY CONFIG.	COLOR	STATUS
-										
1	MOLEX	34565-0003	12582676	02JN03	MX123 DRESS COVER 66/73/80 CKT	N/A	N/A	N/A	BLACK	AVAILABLE
2	MOLEX	34822-0013	12642692	01SP13	MX123 HRNS CONN ASSY 66 CKT	A	0	1458	BLACK	AVAILABLE
3	MOLEX	34822-0033	12659312	01SP13	MX123 HRNS CONN ASSY 66 CKT	C	0	2467	BLUE	AVAILABLE
4	MOLEX	34822-0023	12642693	01SP13	MX123 HRNS CONN ASSY 66 CKT	A	9	1458	BLACK	AVAILABLE
5	MOLEX	34822-0043	12659313	01SP13	MX123 HRNS CONN ASSY 66 CKT	C	9	2467	BLUE	AVAILABLE
6	MOLEX	34566-0103	12582677	11JN04	MX123 HRNS CONN ASSY 73 CKT	A	0	1458	BLACK	AVAILABLE
7	MOLEX	34566-0203	12582678	11JN04	MX123 HRNS CONN ASSY 73 CKT	B	0	1468	ST GRAY	AVAILABLE
8	MOLEX	34566-0303	12615654	09AP08	MX123 HRNS CONN ASSY 73 CKT	C	0	2467	BLUE	AVAILABLE
9	MOLEX	34566-0403	12647268	T.B.D	MX123 HRNS CONN ASSY 73 CKT	D	0	2367	BROWN	NOT ACTIVE
10	MOLEX	34566-0503	AMJ28633	T.B.D	MX123 HRNS CONN ASSY 73 CKT	E	0	2468	GREEN	NOT ACTIVE
11	MOLEX	34566-0603	12653574	05DC14	MX123 HRNS CONN ASSY 73 CKT	F	0	1357	NATURAL	AVAILABLE
12	MOLEX	34566-0703	12588057	09AP08	MX123 HRNS CONN ASSY 80 CKT	G	0	1358	BLUE	AVAILABLE
13	MOLEX	34566-0803	12588058	11JN04	MX123 HRNS CONN ASSY 80 CKT	H	0	2458	ST GRAY	AVAILABLE
14	MOLEX	34566-0903	12615656	T.B.D	MX123 HRNS CONN ASSY 80 CKT	J	0	2457	BLACK	NOT ACTIVE
15	MOLEX	34566-1003	AMJ28595	T.B.D	MX123 HRNS CONN ASSY 80 CKT	K	0	2357	BROWN	NOT ACTIVE
16	MOLEX	34566-1103	AMJ29057	T.B.D	MX123 HRNS CONN ASSY 80 CKT	L	0	2368	GREEN	NOT ACTIVE
17	MOLEX	34566-1203	AMJ28669	T.B.D	MX123 HRNS CONN ASSY 80 CKT	M	0	2358	NATURAL	NOT ACTIVE
18	MOLEX	34566-1303	12603596	11JN04	MX123 HRNS CONN ASSY 73 CKT	A	9	1458	BLACK	AVAILABLE
19	MOLEX	34566-1403	12603597	11JN04	MX123 HRNS CONN ASSY 73 CKT	B	9	1468	ST GRAY	AVAILABLE
20	MOLEX	34566-1503	12615655	09AP08	MX123 HRNS CONN ASSY 73 CKT	C	9	2467	BLUE	AVAILABLE
21	MOLEX	34566-1603	12647269	T.B.D	MX123 HRNS CONN ASSY 73 CKT	D	9	2367	BROWN	NOT ACTIVE
22	MOLEX	34566-1703	AMJ28698	T.B.D	MX123 HRNS CONN ASSY 73 CKT	E	9	2468	GREEN	NOT ACTIVE
23	MOLEX	34566-1803	12653575	05DC14	MX123 HRNS CONN ASSY 73 CKT	F	9	1357	NATURAL	AVAILABLE
24	MOLEX	34566-1903	12603598	09AP08	MX123 HRNS CONN ASSY 80 CKT	G	9	1358	BLUE	AVAILABLE
25	MOLEX	34566-2003	12603599	11JN04	MX123 HRNS CONN ASSY 80 CKT	H	9	2458	ST GRAY	AVAILABLE
26	MOLEX	34566-2103	12615657	T.B.D	MX123 HRNS CONN ASSY 80 CKT	J	9	2457	BLACK	NOT ACTIVE
27	MOLEX	34566-2203	AMJ29117	T.B.D	MX123 HRNS CONN ASSY 80 CKT	K	9	2357	BROWN	NOT ACTIVE
28	MOLEX	34566-2303	AMJ29136	T.B.D	MX123 HRNS CONN ASSY 80 CKT	L	9	2368	GREEN	NOT ACTIVE
29	MOLEX	34566-2403	AMJ29214	T.B.D	MX123 HRNS CONN ASSY 80 CKT	M	9	2358	NATURAL	NOT ACTIVE
30	MOLEX	34736-2002	12642697	01AU10	MX64 RCPT TERM Ag 18/20 GAGE B (RIGHT PAYOFF)	N/A	N/A	N/A	N/A	AVAILABLE
31	MOLEX	34736-2001	12642696	01AU10	MX64 RCPT TERM Ag 22 GAGE B (RIGHT PAYOFF)	N/A	N/A	N/A	N/A	AVAILABLE
32	MOLEX	34586-0001	T.B.D.	11JN04	MX123 0.64MM GROMMET PLUG	N/A	N/A	N/A	NATURAL	AVAILABLE
33	YAZAKI	7116-4150-02	12588066	02JN03	2.8mm YESC SEALED FEMALE TERMINAL TIN 20/22 GAGE (CABLE RANGE 0.30mm-0.60mm)	N/A	N/A	N/A	N/A	NOT ACTIVE
34	YAZAKI	7116-4151-02	12588067	02JN03	2.8mm YESC SEALED FEMALE TERMINAL TIN 16/18 GAGE (CABLE RANGE 0.75mm-1.40mm)	N/A	N/A	N/A	N/A	NOT ACTIVE
35	YAZAKI	7116-4152-02	12582685	02JN03	2.8mm YESC SEALED FEMALE TERMINAL TIN 14 GAGE (CABLE RANGE 1.50mm-2.50mm)	N/A	N/A	N/A	N/A	AVAILABLE
36	YAZAKI	7158-3111-60	12588068	02JN03	2.8mm CABLE SEAL (wire O.D. range 1.20mm-1.90mm)	N/A	N/A	N/A	GREEN	NOT ACTIVE
37	YAZAKI	7158-3112-70	12588069	02JN03	2.8mm CABLE SEAL (wire O.D. range 1.80mm-2.30mm)	N/A	N/A	N/A	YELLOW	NOT ACTIVE
38	YAZAKI	7158-3113-40	12582686	02JN03	2.8mm CABLE SEAL (wire O.D. range 2.18mm-3.00mm)	N/A	N/A	N/A	WHITE	AVAILABLE
39	YAZAKI	7158-3114-90	T.B.D	02JN03	2.8mm YESC CAVITY PLUG	N/A	N/A	N/A	BLUE	AVAILABLE
40	MOLEX	63811-4200	XX019825	02JN03	MX64 TERM HAND CRIMP TOOL	N/A	N/A	N/A	N/A	AVAILABLE
41	MOLEX	63813-1400	XX019826	02JN03	MX64 TERM SERVICE TOOL	N/A	N/A	N/A	N/A	AVAILABLE
42	MOLEX	63865-8000	XX019827	02JN03	MX64 CRIMP APPLICATOR with TOOL KIT 18/20 GAGE PAYOFF DIRECTION D (left payoff) (contact Molex for payoff detail)	N/A	N/A	N/A	N/A	AVAILABLE
43	MOLEX	63865-8070	XX019828	02JN03	MX64 APPLICATOR TOOL KIT 18/20 GAGE	N/A	N/A	N/A	N/A	AVAILABLE
44	MOLEX	63865-8100	XX019829	02JN03	MX64 CRIMP APPLICATOR with TOOL KIT 22 GAGE PAYOFF DIRECTION D (left payoff) (contact Molex for payoff detail)	N/A	N/A	N/A	N/A	AVAILABLE
45	MOLEX	63865-8170	XX019830	02JN03	MX64 APPLICATOR TOOL KIT 22 GAGE	N/A	N/A	N/A	N/A	AVAILABLE
46	SPX	J35616-64	T.B.D.	02JN03	0.64mm PROBE TOOL (for rcpt)	N/A	N/A	N/A	N/A	AVAILABLE
47	SPX	J35616-64A	T.B.D.	02JN03	0.64mm PROBE TOOL WITH EXT (for rcpt)	N/A	N/A	N/A	N/A	AVAILABLE
48	SPX	J35616-65	T.B.D.	02JN03	0.64mm PROBE TOOL WITH EXT (for pin)	N/A	N/A	N/A	N/A	AVAILABLE
49	SPX	J35616-4A	T.B.D.	02JN03	2.8mm PROBE TOOL (for rcpt)	N/A	N/A	N/A	N/A	AVAILABLE
50	YAZAKI	X39899-J374	12094430	02JN03	2.8mm TERM SERVICE TOOL	N/A	N/A	N/A	N/A	AVAILABLE

002B

* - MX123 DRESS COVER 73/80/66 CKT MATES TO ANY MX123 HARN CONN ASSY SHOWN ON TABLE ABOVE

	GM	PAGE TITLE: COMPONENT TABLE		DRAWING NUMBER: 12642695	DWG STATUS: ST R / REV 002 / PDI	PAGE NUMBER: 5 OF 21

NOTES: UNLESS OTHERWISE SPECIFIED

1. MATERIAL FOR INTERFACE:

A. RESIN:
   1. 30% G.F. PBT; 20% MAX. (BY WEIGHT) REGRIND.
   2. MATING CONNECTOR INTERFACE PART COLOR MUST BE SAME AS MATCHING KEYED HARNESS CONNECTOR ASSEMBLY.
   3. MUST BE VALIDATED FOR INDIVIDUAL DEVICE APPLICATION REQUIREMENTS.

B. 0.64MM PINS:
   1. BASE MATERIAL: COPPER ALLOY; CONDUCTIVITY >= 28% IACS AT 20°C; TENSILE STRENGTH >= 635 N/mm²;SURFACE ROUGHNESS R_a 6 MAX.
   2. PLATING FINISH: SILVER (Ag). PLATING TO BE 1.9-3.3 um ELECTRODEPOSITED SEMI-BRIGHT SILVER OVER 1.25-2.25 um DUCTILE SULPHAMATE NICKEL PER NOTE 1(D).
   3. ANTI-TARNISH: SYNTHETIC HYDROCARBON CONTACT SURFACE FINISH OR EQUIVALENT APPLIED WITHOUT VOID TO CONTACT AREA (MIN 3.7mm FROM PIN TIP).

C. 2.8MM BLADE:
   1. BASE MATERIAL: COPPER ALLOY; CONDUCTIVITY>= 28% IACS AT 20°C; TENSILE STRENGTH >= 350 N/mm²; SURFACE ROUGHNESS R_a 6 MAX.
   2. PLATING FINISH: TIN. PLATING TO BE 2.5-5.0 um ELECTRODEPOSITED TIN, MATTE FINISH OVER 1.25-2.5um DUCTILE SULPHAMATE NICKEL PER NOTE 1(D).

D. PLATING REQUIREMENTS:

1. SILVER PLATING
   a. 99.5% PURE SEMI-BRIGHT WITH NO ORGANIC BRIGHTNERS OR CHROMATES.

2. NICKEL PLATING
   a. ELECTRODEPOSITED DUCTILE SULFAMATE NICKEL WITH A NON-BRIGHTENED FINISH. NO ORGANIC OR BRIGHTENING AGENTS SHALL BE ALLOWED.
   b. SHALL ONLY BE USED AS AN UNDERLYING PLATING AND MAY NOT BE USED AS AN ELECTRICAL CONTACT SURFACE PLATING.
   c. SHALL BE NODULE FREE WHEN VIEWED AT 10X MAGNIFICATION IN MEASURED IN CONTACT SURFACE AREA PLUS 0.5MM PERIMETER AROUND THE CONTACT SURFACE AREA.
   d. ALL PLATINGS SHALL HAVE A 1.0% MAXIMUM BY WEIGHT IMPURITIES. IMPURITIES ARE DEFINED AS ALL ELEMENTS NOT THE PRIMARY PLATING OR HARDENING AGENT IF APPLICABLE, AS DETERMINED BY WET CHEMICAL ANALYSIS OR AUGER METHOD. NO SINGLE IMPURITY SHALL EXCEED 0.1% MAXIMUM BY WEIGHT.

3. TESTING
   a. THICKNESS TO BE MEASURED IN CONTACT SURFACE AREA PLUS 0.5MM PERIMETER AROUND THE CONTACT SURFACE AREA AS DESIGNATED IN THE DRAWING. THICKNESS SHALL BE DETERMINED BY METHOD OF X-RAY (XRF).
   b. PLATING ADHESION SHALL BE TESTED BY A BEND TEST FOR ALL METALS. THE TEST SAMPLE SHALL BE BENT 90 DEGREES TO DETERMINE DEPOSIT ADHESION. TESTING SHALL BE COMPLETED IN ACCORDANCE WITH ASTM SPEC B571.

002C

2. DESIGN - GENERAL:

A. THIS IS A 100% CAD GENERATED PART. THE CAD MATHEMATICAL DATA IS THE MASTER FOR THIS PART. FOR DIMENSIONAL OR ANY INFORMATION NOT SHOWN ON THIS DRAWING, ANALYZE THE CAD MODEL.
B. TOLERANCES:
   1. LINEAR 0.X ± 0.30
              0.XX ± 0.10
              0.XXX ± 0.10
   2. ANGULAR X° ± 3°
   3. ⌓ | 1.0 | A | B | C
C. MINIMUM WALL THICKNESS REQUIRED: 1.3mm.
D. CORNERS SHOWN AS SHARP TO BE R 0.2 MAX.
E. LETTERING SHALL BE 0.15 MAX RAISED IN 0.20 MAX RECESS PAD. THIS INCLUDES MATERIAL CODE, RECYCLING CODE, CAVITY ID AND DATE CODE.
F-1. PARTS MUST BE FREE OF DISCOLORATION, SALT RESIDUE AND OTHER IMPERFECTIONS THAT AFFECT FIT OR FUNCTION.
F-2. SCRATCHES OR DENTS NOT TO EXCEED 0.013mm IN DEPTH.
G. FOLLOWING PRODUCTION CODES TO BE PERMANENTLY MARKED & HUMAN READABLE TO A LETTER HEIGHT OF 1.5 ±0.5MM X 0.3 MAX DEEP
   1. MATERIAL #: XXXXX-XXXX
   2. DATE CODE: JJJY (JULIAN DAY, LAST DIGIT OF YEAR)
   3. INSPECTION MACHINE CODE + SERIAL #: X_XXXXX

3. DESIGN - MANUFACTURING:

A. DRAFT TO BE WITHIN TOLERANCE.
B. ALLOWABLE FLASH MAX 0.2 HIGH X MAX 0.13 THICK.
C. ALLOWABLE PARTING LINE MISMATCH 0.2 MAX.
D. EJECTOR PINS MARK TO BE FLUSH TO 0.25 MAX DEPRESSED.
E. ALLOWABLE GATE VESTIGE FLUSH TO 0.25 MAX PROTRUSION.
F. NO EXTERNAL MOLD RELEASE AGENT ALLOWED DURING MANUFACTURING.
G. STEEL THAT FORMS THE INDICATED SURFACE MUST BE POLISHED WITH A DIAMOND FINISH (SPI A-2) OVER THE FULL PERIPHERY OF THE TOOL. SURFACE MUST HAVE NO MISMATCH.
H. ANY PROCESS LUBRICANT REMAINING ON THE TERMINAL MUST NOT VARNISH OR DEGRADE IT'S ELECTRICAL PERFORMANCE UP TO A MAXIMUM CLASS AMBIENT TEMPERATURE PER SAE USCAR-2 FOR 1008 HOURS. PROCESS LUBRICANTS SHOULD BE APPROVED BY THE RESPONSIBLE ENGINEER.
J. OPTIONAL FEATURES PROVIDED FOR AUTOMATION.
K. PART MUST BE FREE FROM BURRS AND SHARP EDGES, WHICH MIGHT BE DETRIMENTAL TO SATISFACTORY ASSEMBLY, SAFE HANDLING OR FUNCTION OF PART.
L. PARTS AS DELIVERED TO ASSEMBLY SHALL BE CLEAN AND FREE OF DEBRIS, RESIDUAL ABRASIVE MATERIAL AND CORROSION PRODUCTS ADVERESLY AFFECTING FUNCTION OR APPEARENCE.
M. RESTRICTED AND REPORTABLE SUBSTANCES FOR PARTS PER GMW3059.

NOTES: UNLESS OTHERWISE SPECIFIED

4. SYSTEM REQUIREMENTS:

A. HARNESS CONNECTOR IS COMPATIBLE WITH THE FOLLOWING SAE WIRE SIZE NO'S:
14, MEETING SAE J1128
18, MEETING SAE J1128, MAX O.D. OF 2.06 MM
20, MEETING SAE J1128
22, MEETING SAE J1128, MIN O.D. OF 1.47 MM

B. CABLE TIE SPECIFICATIONS:
1. CABLE TIE:
TENSILE RATING: 220N / (50lbs) MIN
TIE LENGTH: 186mm MIN
TIE WIDTH: 4.75mm MAX
MATERIAL: NYLON
2. INSTALLATION:
CABLE TIE TENSION: 190N MIN
3. DRESSED WIRE BUNDLE PACKAGING: SEE FIG. 1

C. WHEN MATED WITH COMPONENT CONNECTOR INTERFACE AND/OR DRESS COVER, HARNESS CONNECTOR SYSTEM CONFORMS TO THE FOLLOWING:
1. SAE/USCAR-2, REV: 3 APRIL, 2001; CLASS 3
2. FIELD CORRELATED LIFE TEST, SAE/USCAR-20, NOV. 2001
3. GMW #3191 AUGUST 22, 2000 (DRAFT); TEMPERATURE CLASS 3, SEALING CLASS 1, VIBRATION CLASS 2
4. RESTRICTED AND REPORTABLE CHEMICALS PER GMW #3059, REV: D AUGUST 2002
5. TPA USER FORCES (FULLY POPULATED WITH TERMINALS)
a. REMOVAL FROM LOCK TO PRE-SET: <=120N

D. WIRE SPECIFICATIONS:
1. WIRE SURFACE MUST BE FREE OF SCRATCHES, GROOVES OR DENTS WHERE FUNCTIONAL

5. TERMINAL CURRENT RATINGS:

ALL TESTING DONE IN ACCORDANCE WITH USCAR-2 REV5 SECTION 5.3

A. MX64 RCPT TERM
1. MX64 RCPT TERM Ag 18/20 GAGE CRIMPED TO SAE WIRE SIZE NO.18 AND MATED TO MX123 0.64MM PIN: 11.3 AMPS
2. MX64 RCPT TERM Ag 22 GAGE CRIMPED TO SAE WIRE SIZE NO.22 AND MATED TO MX123 0.64MM PIN:8.5 AMPS

WIRE	CURRENT RATING			
	23'C	85'C	105'C	125'C
18AWG	11.3A	11.3A	9.5A	6.6A
20AWG	10.0A	10.0A	8.3A	5.7A
22AWG	8.6A	8.6A	7.1A	5.0A

B. 2.8MM RCPT TERM
1. 2.8MM RCPT TERM TIN 14 GAGE CRIMPED TO SAE WIRE SIZE NO.14 AND MATED TO MX123 2.8MM BLADE: 25.6 AMPS

6. CONTACT MOLEX AUTOMOTIVE FOR AVAILABLE CUSTOM PATTERNS OF CAVITIES OPEN FOR CIRCUITS

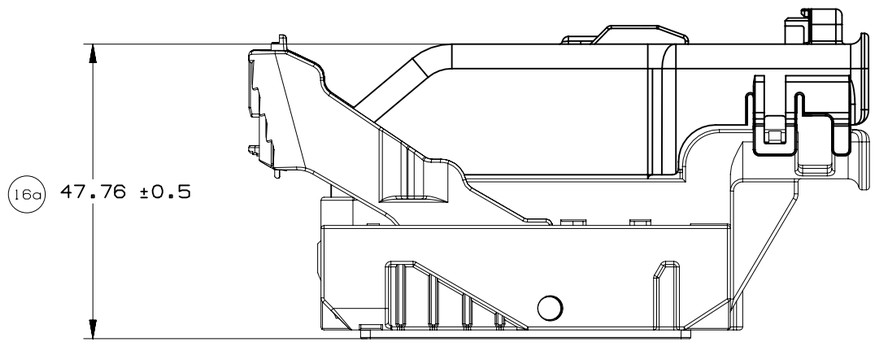

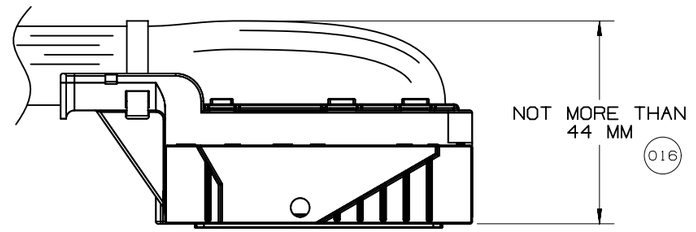

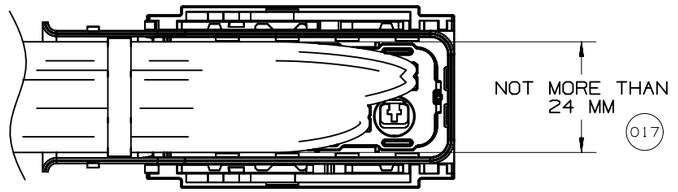

Fig. 1

	GM	PAGE TITLE WIRE DRESS PACKAGING DIMENSIONS		DRAWING NUMBER 12642695	DWG STATUS ST: R / REV: 002 / PDI:		PAGE NUMBER 8 OF 21

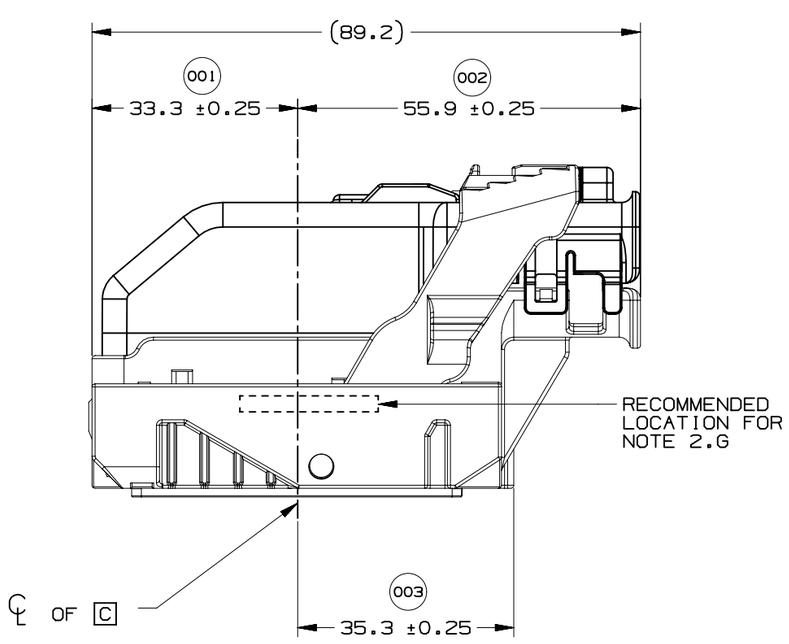

WIRE DRESS OPTION 0 SHOWN

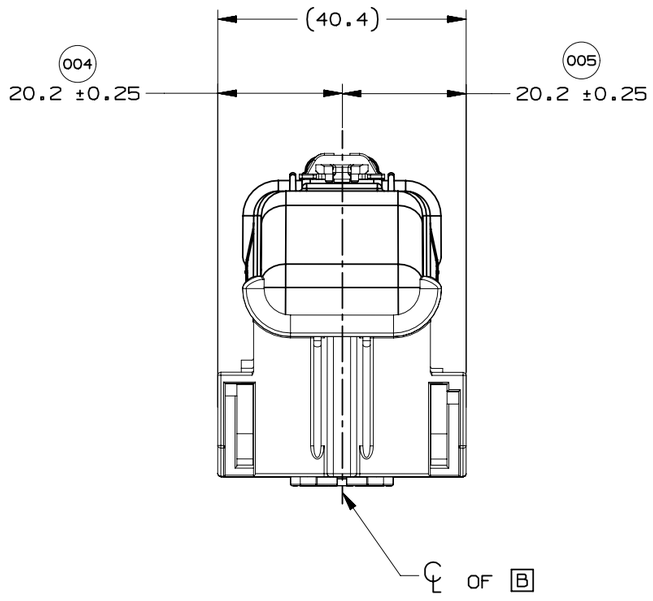

WIRE DRESS OPTION 0 SHOWN

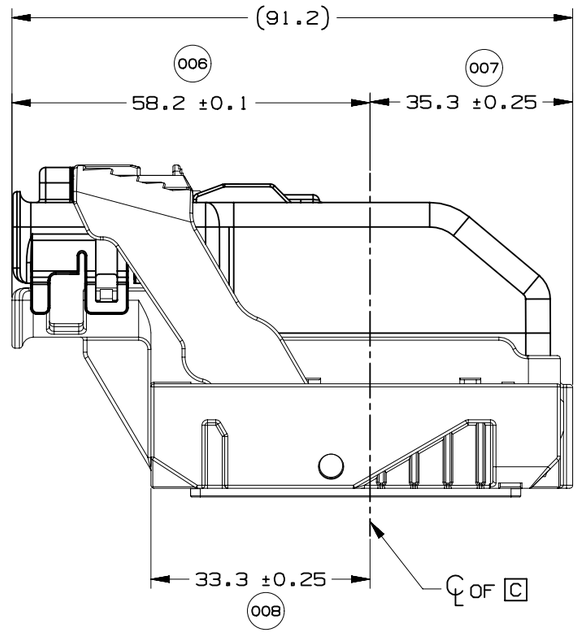

WIRE DRESS OPTION 9 SHOWN

	GM	PAGE TITLE LOCATION AND PACKAGING DIMENSIONS REFERENCING INTERFACE DATUMS B & C		DRAWING NUMBER 12642695	DWG STATUS ST: R / REV: 002 / PDI:		PAGE NUMBER 9 OF 21

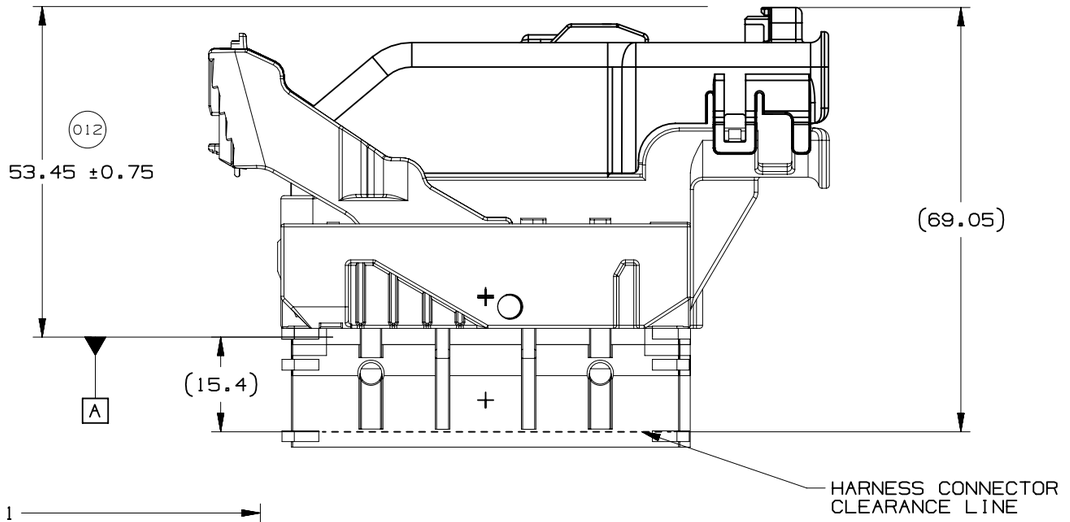

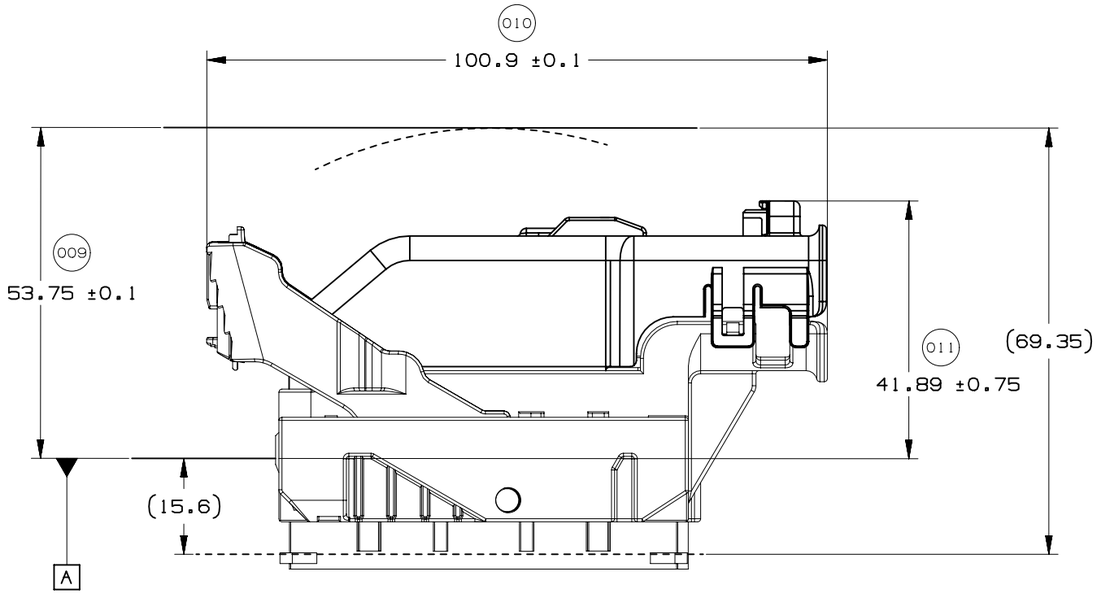

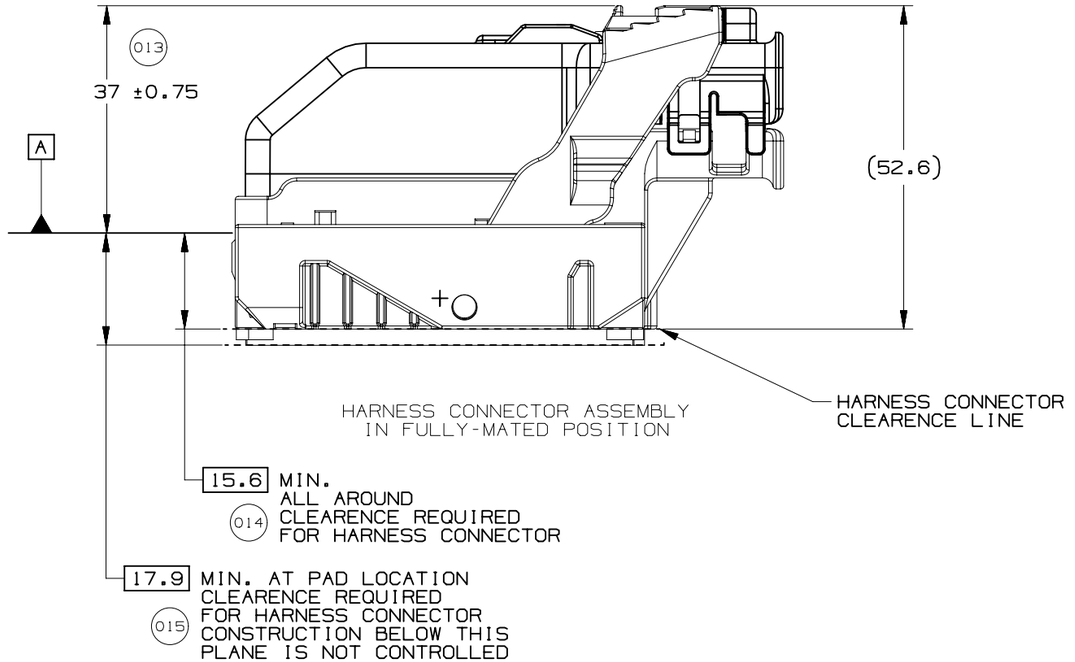

	GM	PAGE TITLE LOCATION AND PACKAGING DIMENSIONS REFERENCING INTERFACE DATUM A		DRAWING NUMBER 12642695	DWG STATUS ST: R / REV: 002 / PDI:	PAGE NUMBER 10 OF 21

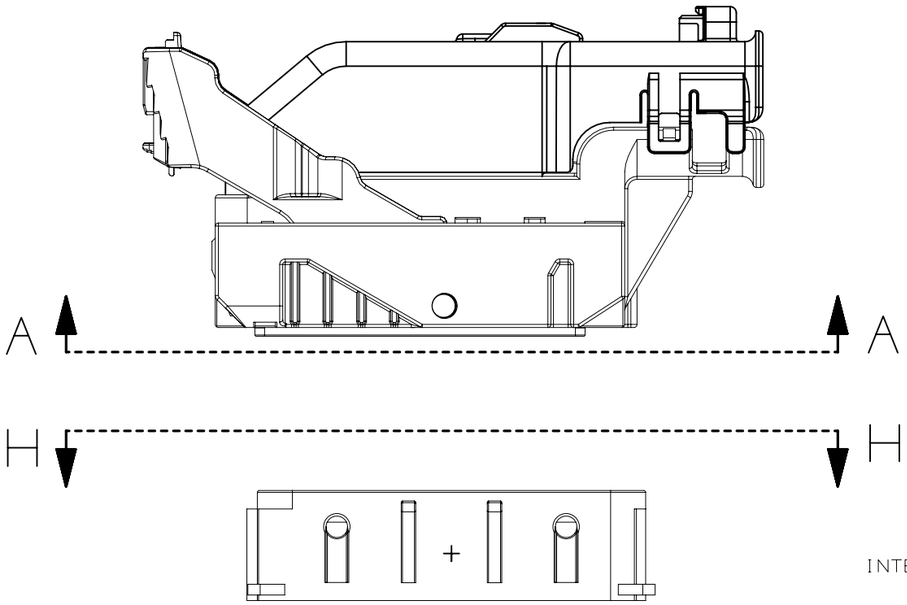

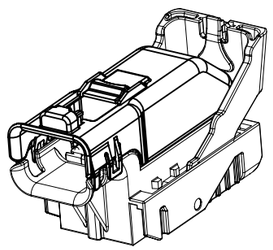

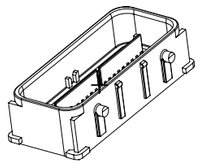

NOTE: REFERENCE THE COMPONENT TABLE FOR KEY OPTIONS AND CONFIGURATIONS

INTERFACE SIDE SHOWN ON ALL SECTION VIEWS

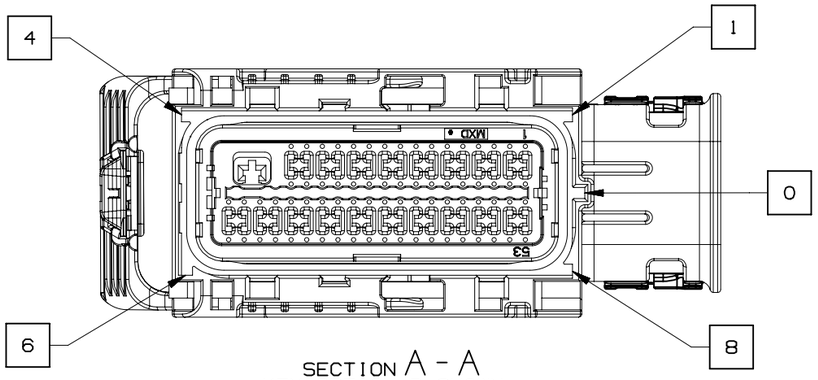

SECTION A - A
KEY OPTION B SHOWN

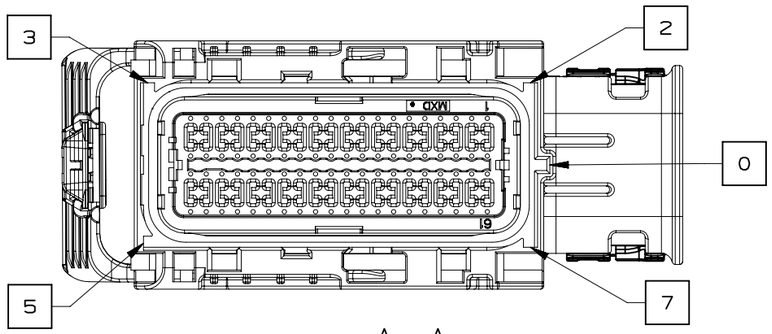

SECTION A - A
KEY OPTION K SHOWN

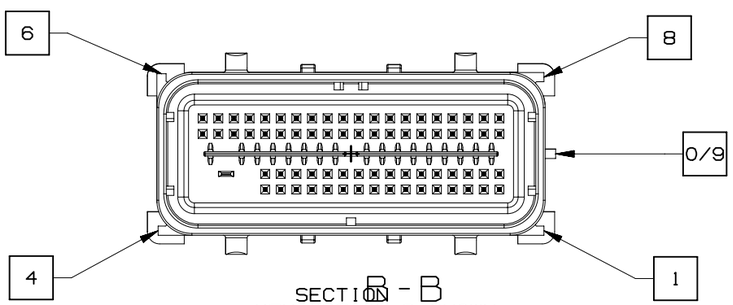

SECTION B - B
KEY OPTION B SHOWN

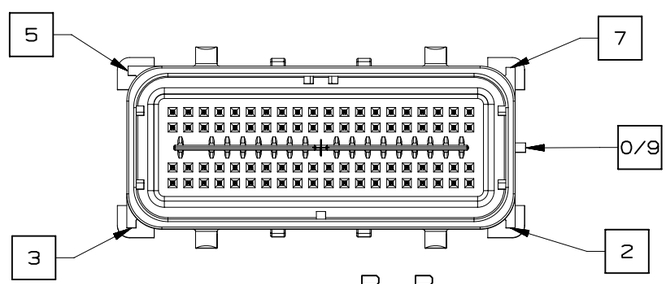

SECTION B - B
KEY OPTION K SHOWN

	GM	PAGE TITLE: KEY ID REF - WIRE DRESS OPTION 0		DRAWING NUMBER: 12642695	DWG STATUS: ST R / REV 002 / PDI	PAGE NUMBER: 11 OF 21

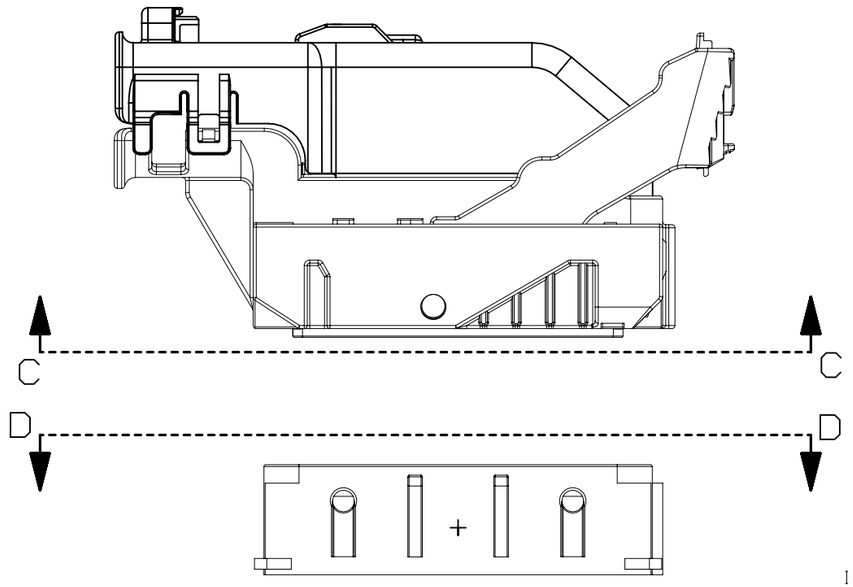

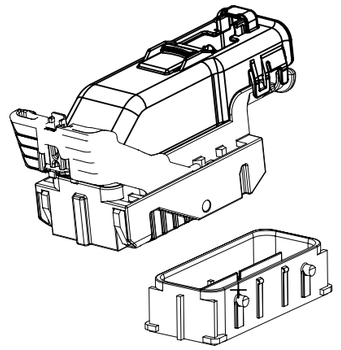

NOTE: REFERENCE THE COMPONENT TABLE FOR KEY OPTIONS AND CONFIGURATIONS

INTERFACE SIDE SHOWN ON ALL SECTION VIEWS

VIEW V

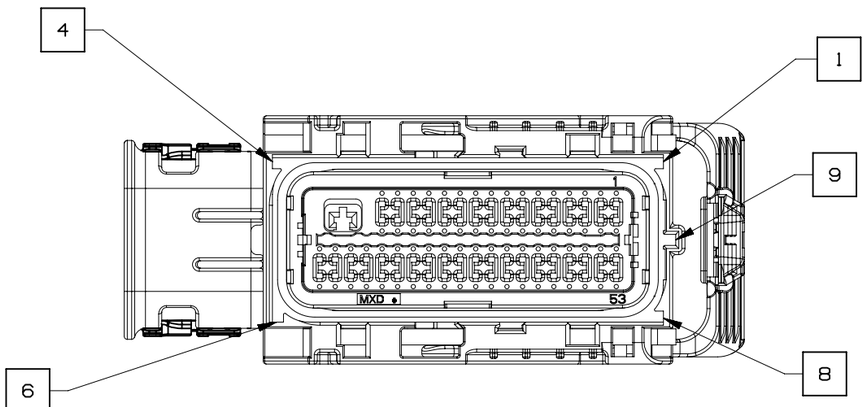

SECTION C-C
KEY OPTION B SHOWN

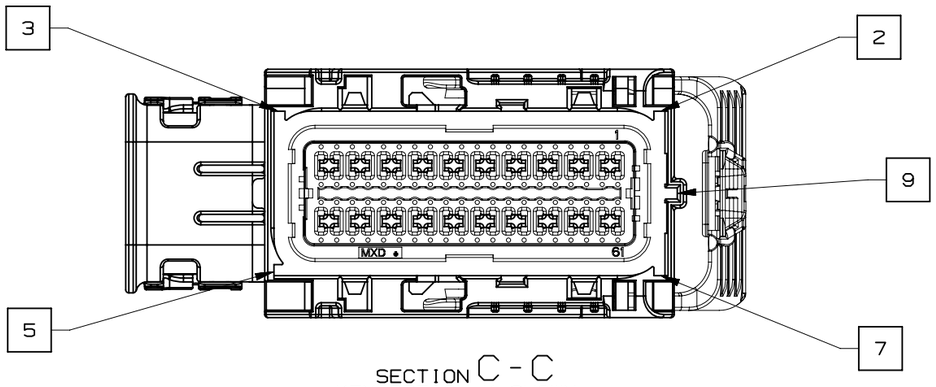

SECTION C - C
KEY OPTION K SHOWN

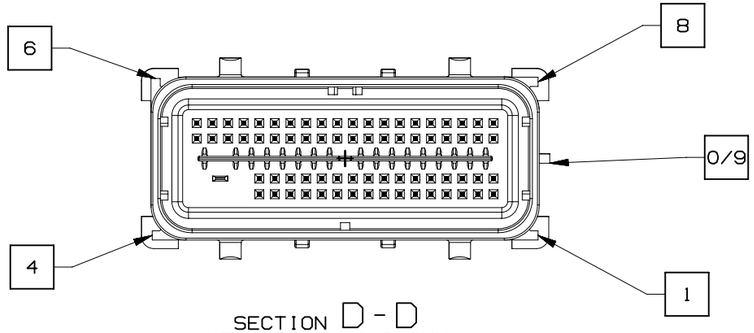

SECTION D - D
KEY OPTION B SHOWN

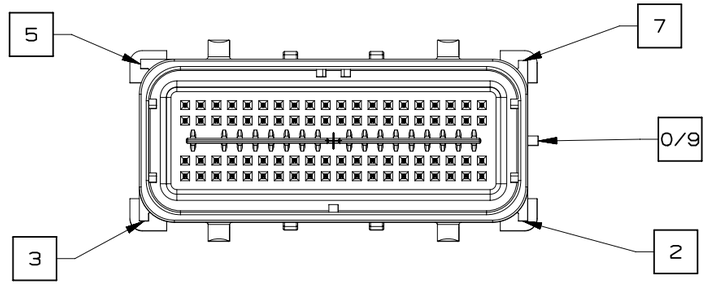

SECTION D - D
KEY OPTION K SHOWN

	GM	PAGE TITLE: KEY ID REF - WIRE DRESS OPTION 9		DRAWING NUMBER: 12642695	DWG STATUS ST: R	REV: 002	PDI:	PAGE NUMBER: 12 OF 21

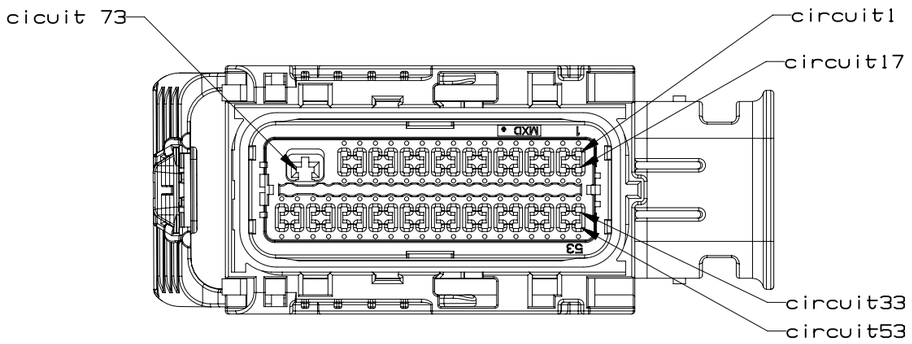

73 CKT HARNESS CONNECTOR ASSEMBLY
WIRE DRESS OPTION 0

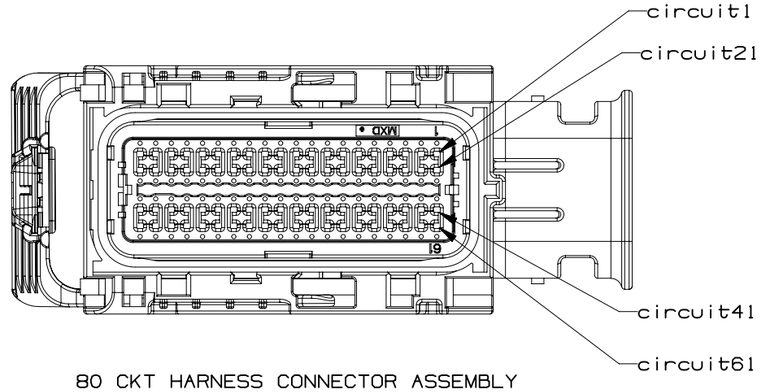

80 CKT HARNESS CONNECTOR ASSEMBLY
WIRE DRESS OPTION 0

INTERFACE SIDE SHOWN ON ALL VIEWS

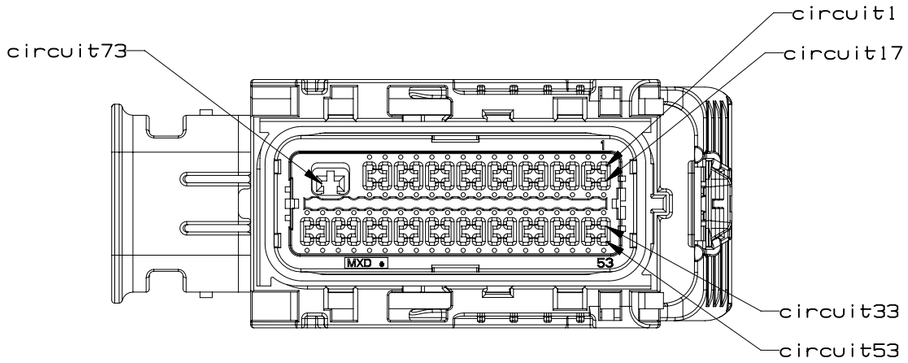

73 CKT HARNESS CONNECTOR ASSEMBLY
WIRE DRESS OPTION 9

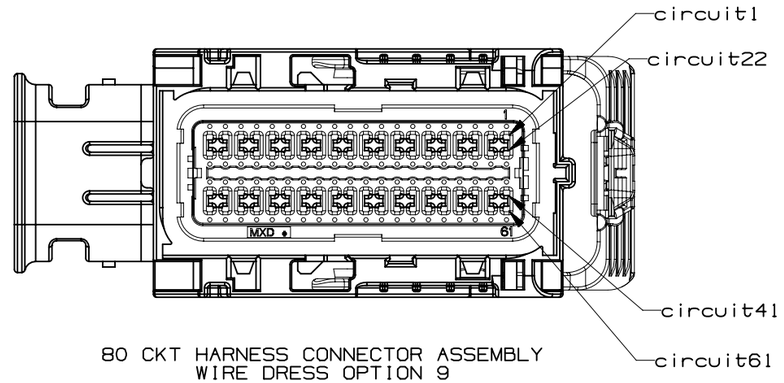

80 CKT HARNESS CONNECTOR ASSEMBLY
WIRE DRESS OPTION 9

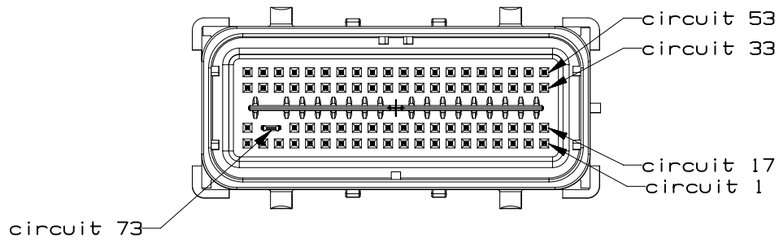

73 CKT COMPONENT CONNECTOR INTERFACE

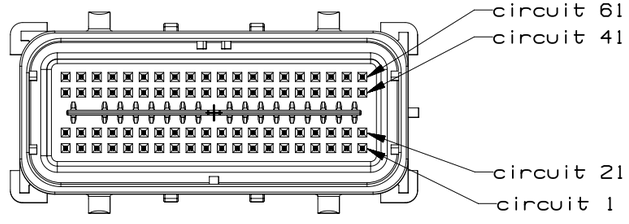

80 CKT COMPONENT CONNECTOR INTERFACE

	GM	PAGE TITLE: CIRCUIT CONFIGURATIONS		DRAWING NUMBER: 12642695	DWG STATUS		PAGE NUMBER
					ST: R	REV: 002	PDI:	13 OF 21

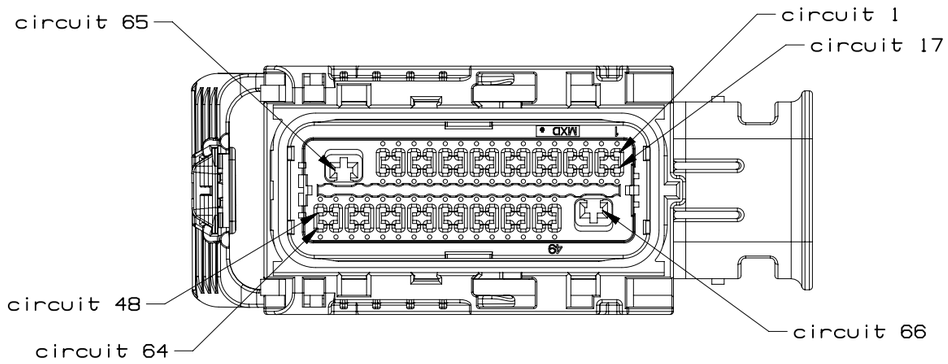

66 CKT HARNESS CONNECTOR ASSEMBLY
WIRE DRESS OPTION 0

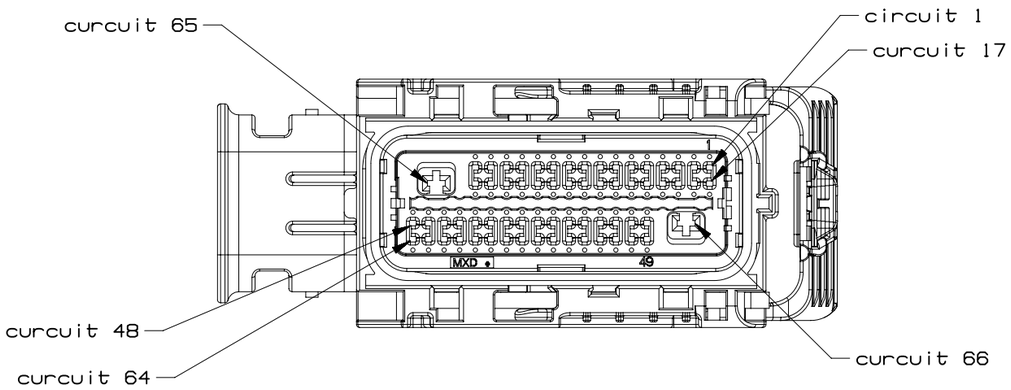

66 CKT HARNESS CONNECTOR ASSEMBLY
WIRE DRESS OPTION 9

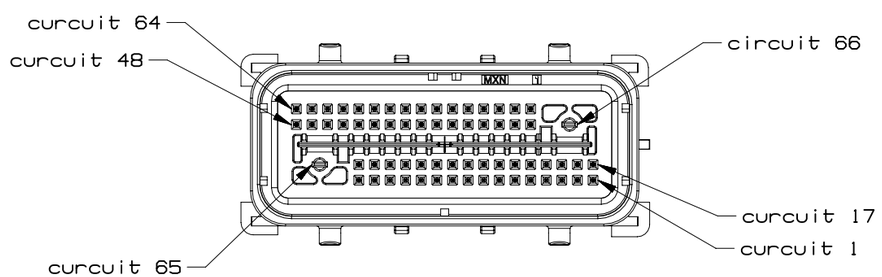

66 CKT COMPONENT CONNECTOR INTERFACE

	GM	PAGE TITLE CIRCUIT CONFIGURATIONS		DRAWING NUMBER 12642695	DWG STATUS ST: R REV: 002 PDI:		PAGE NUMBER 14 OF 21

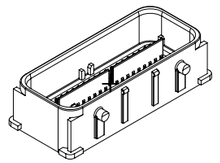

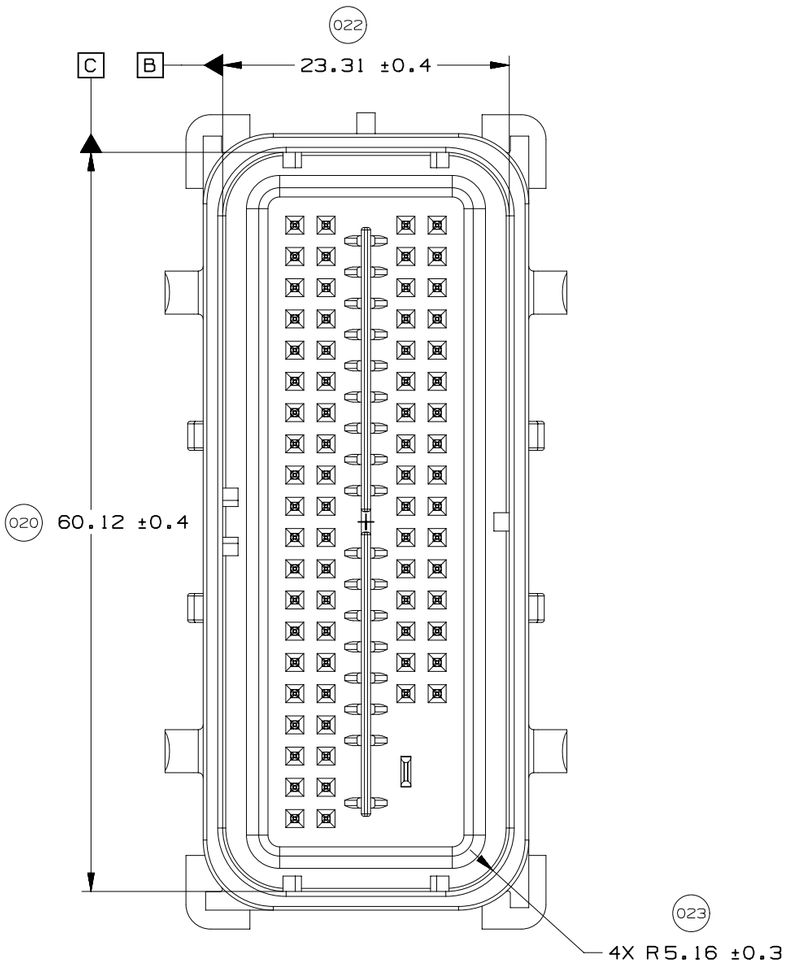

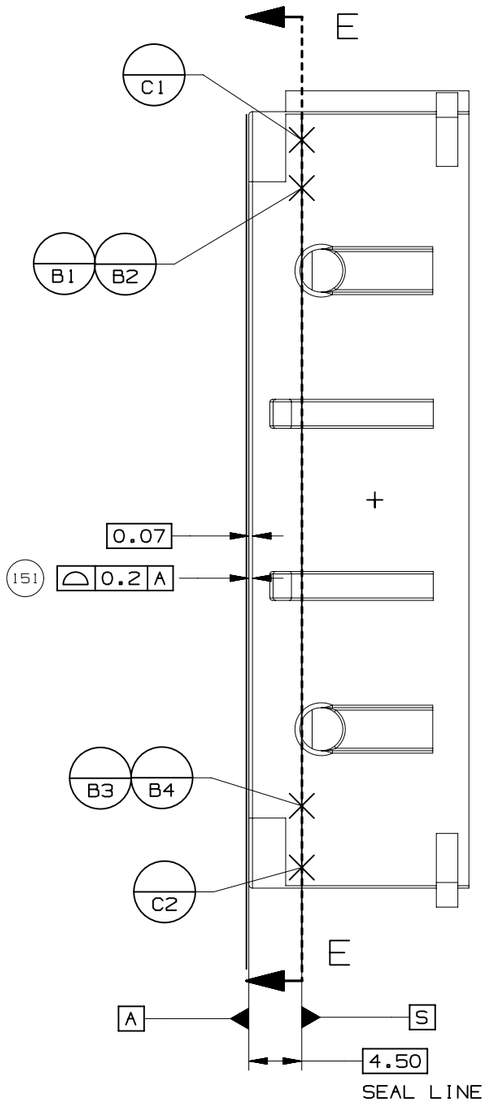

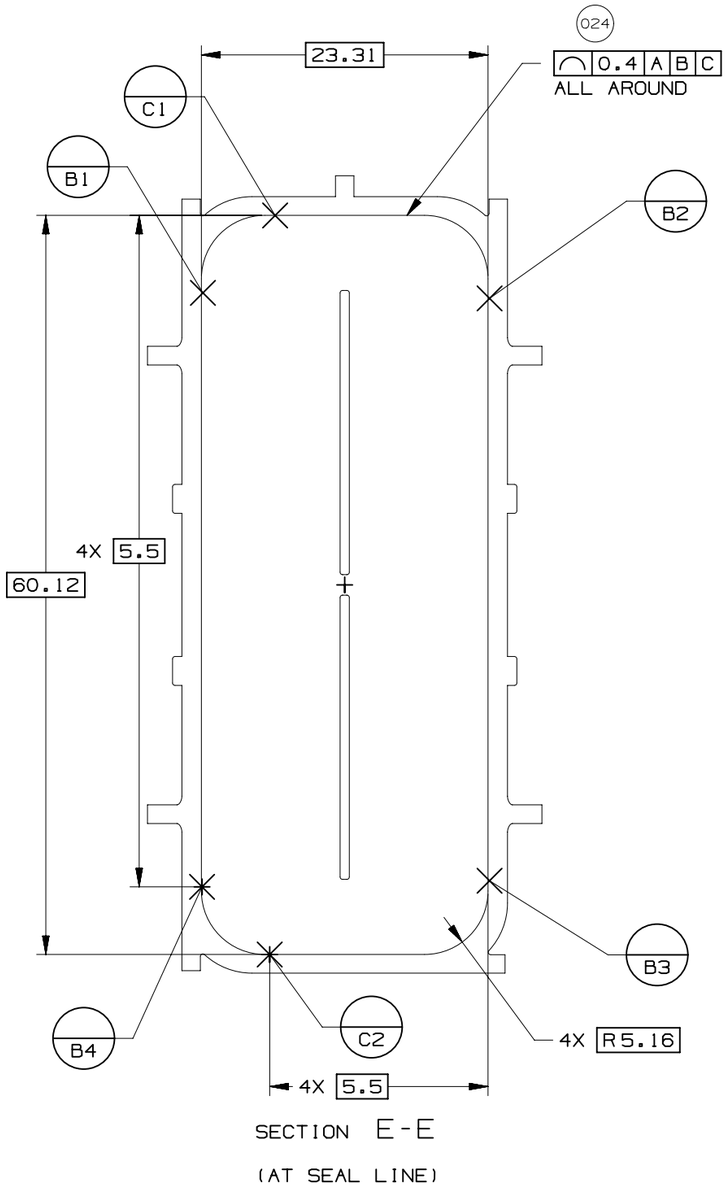

UNLESS SPECIFIED, TOLERANCE OF THE COMPONENT CONNECTOR INTERFACE TO BE 0.13 A B C

GM	PAGE TITLE: COMPONENT CONNECTOR INTERFACE		DRAWING NUMBER: 12642695	DWG STATUS ST: R	REV: 002	PDI:	PAGE NUMBER: 15 OF 21

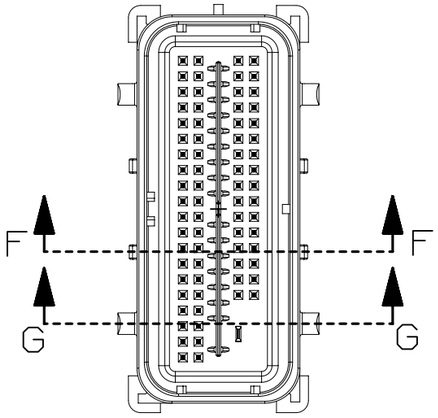

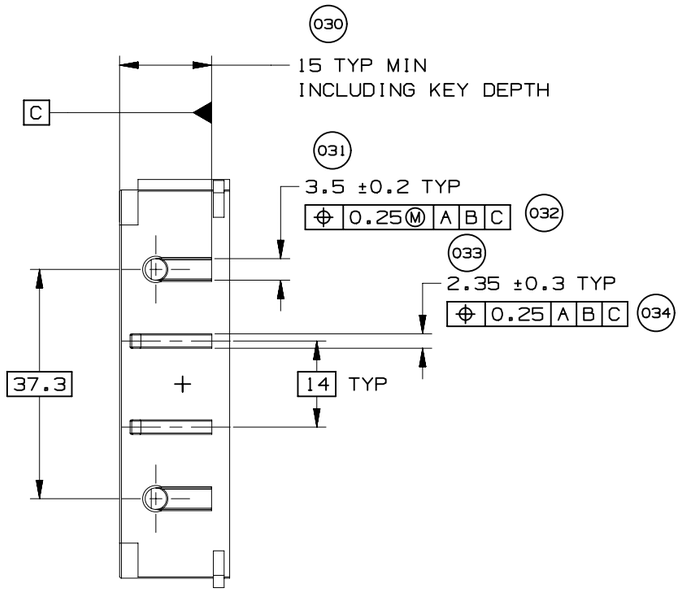

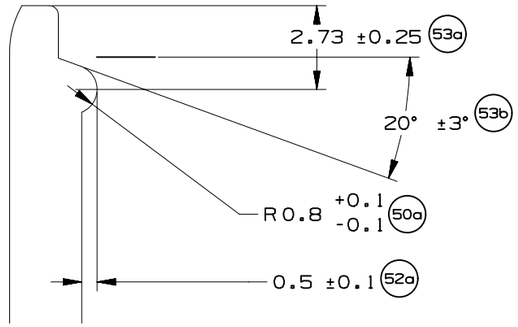

VIEW YY
SCALE 5:1

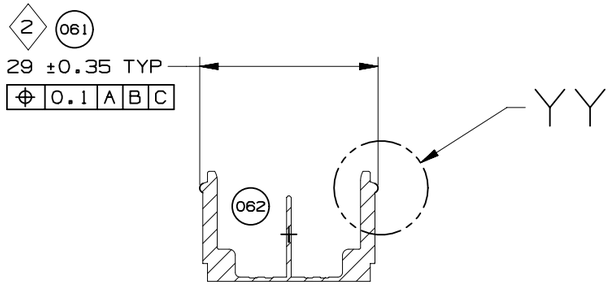

SECTION F-F

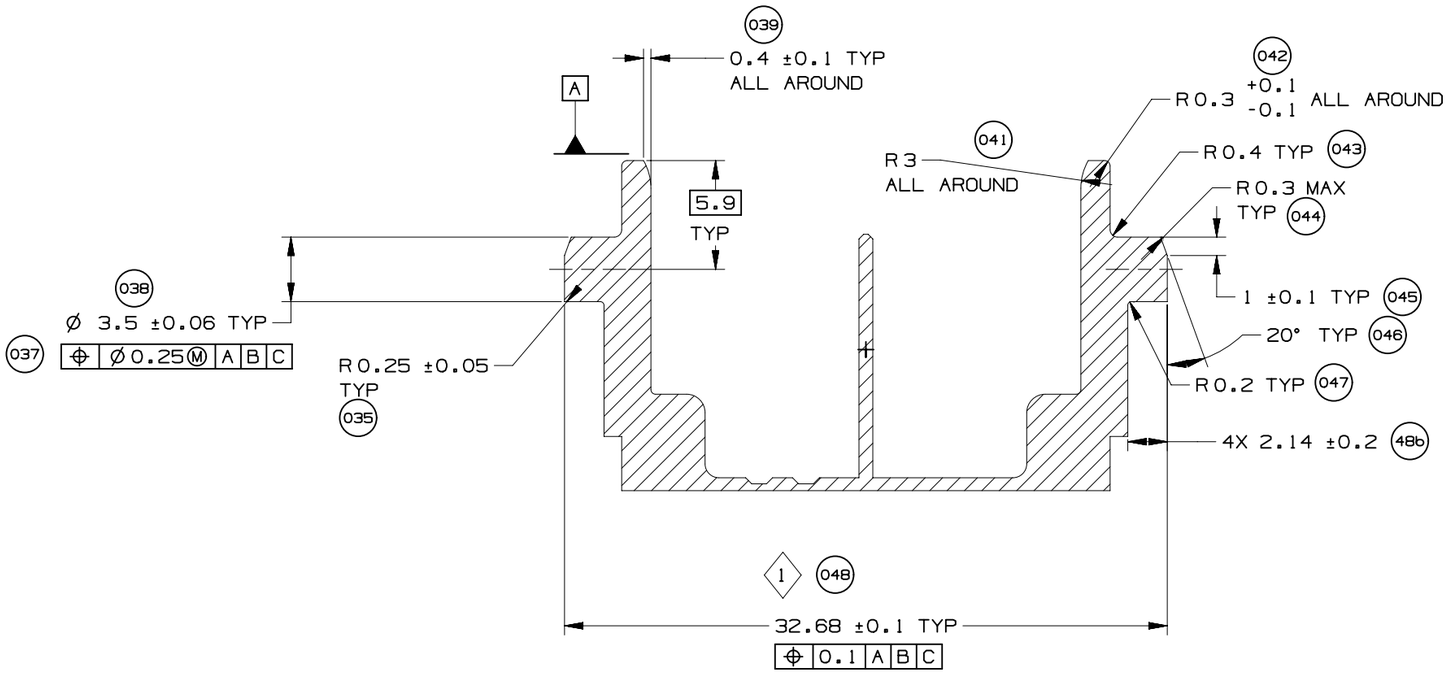

SECTION G-G
(CAM POST)

	GM	PAGE TITLE COMPONENT CONNECTOR INTERFACE		DRAWING NUMBER 12642695	DWG STATUS ST: R / REV: 002 / PDI:	PAGE NUMBER 16 OF 21	

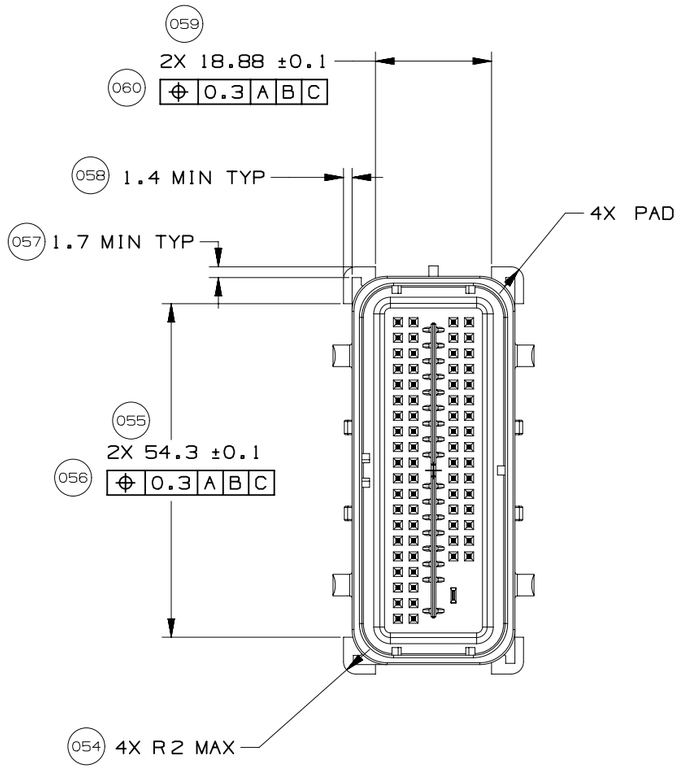

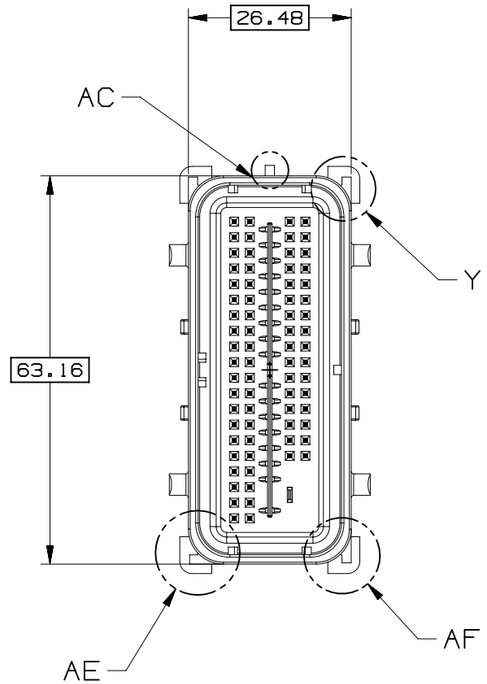

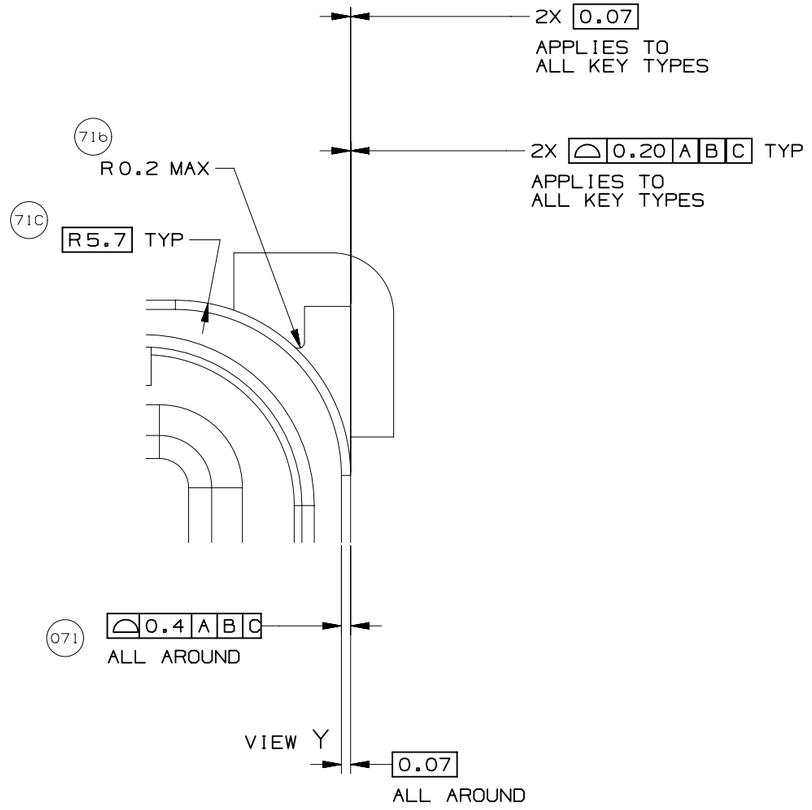

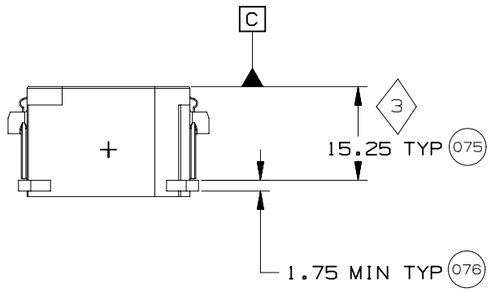

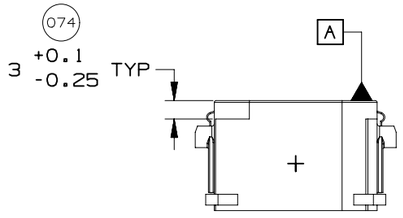

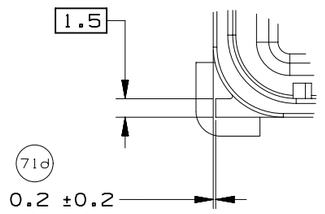

VIEW AE
KEY TYPE 2
SCALE 2:1

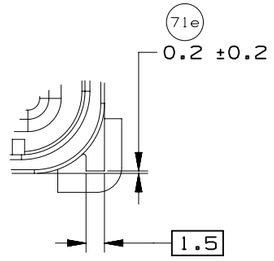

VIEW AF
KEY TYPE 1
SCALE 2:1

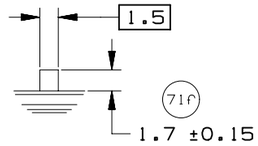

VIEW AC
KEY TYPE 3
SCALE 2:1

	GM	PAGE TITLE COMPONENT CONNECTOR INTERFACE		DRAWING NUMBER 12642695	DWG STATUS ST: R / REV: 002 / PDI:	PAGE NUMBER 17 OF 21

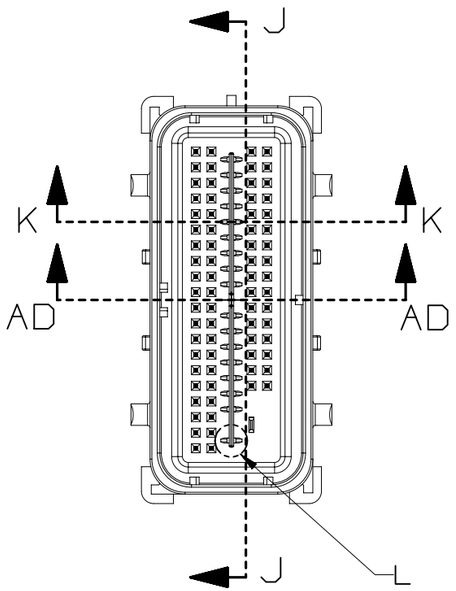

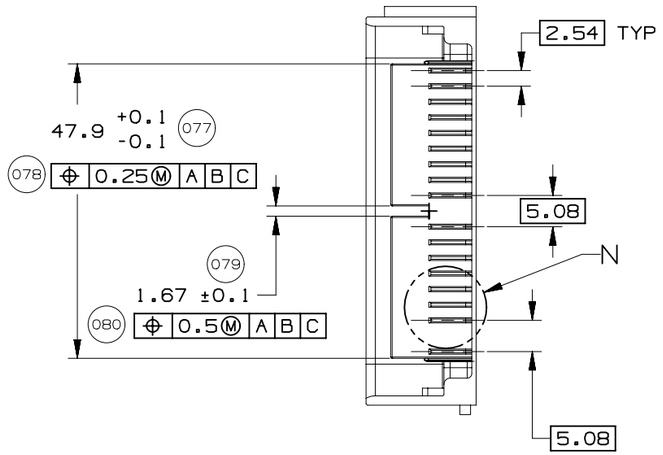

SECTION J-J

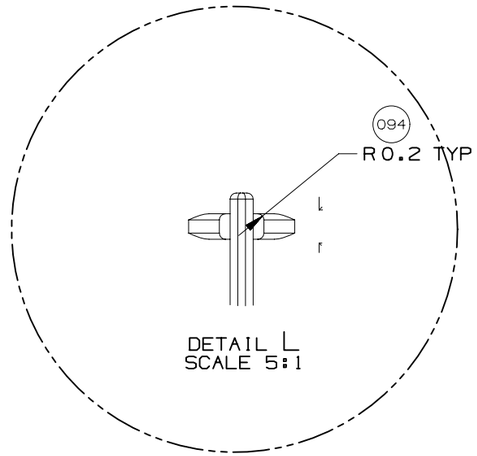

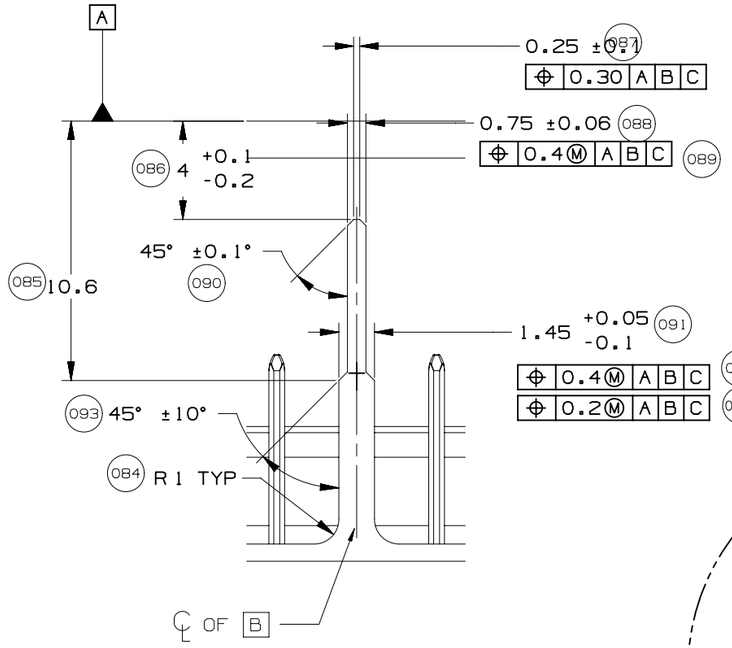

DETAIL M
TYPICAL
SCALE 4:1

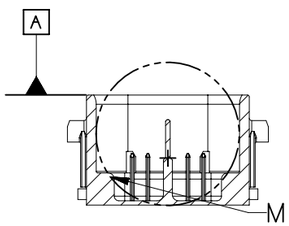

SECTION K-K

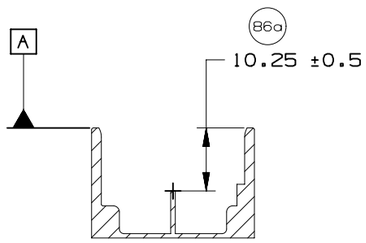

SECTION AD-AD

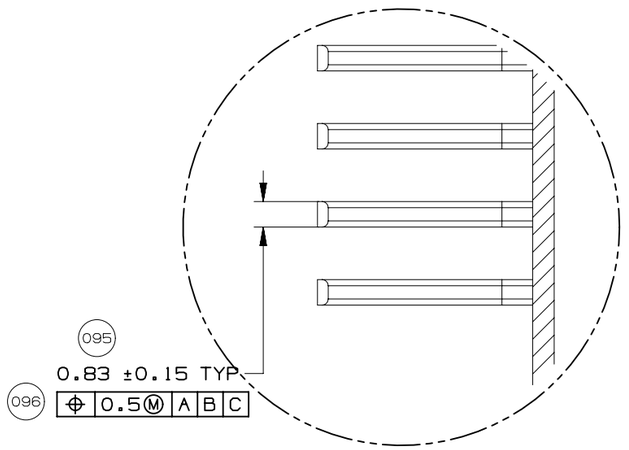

DETAIL N
SCALE 5:1

	GM	PAGE TITLE: COMPONENT CONNECTOR INTERFACE		DRAWING NUMBER: 12642695	DWG STATUS: ST R / REV 002 / PDI	PAGE NUMBER: 18 OF 21

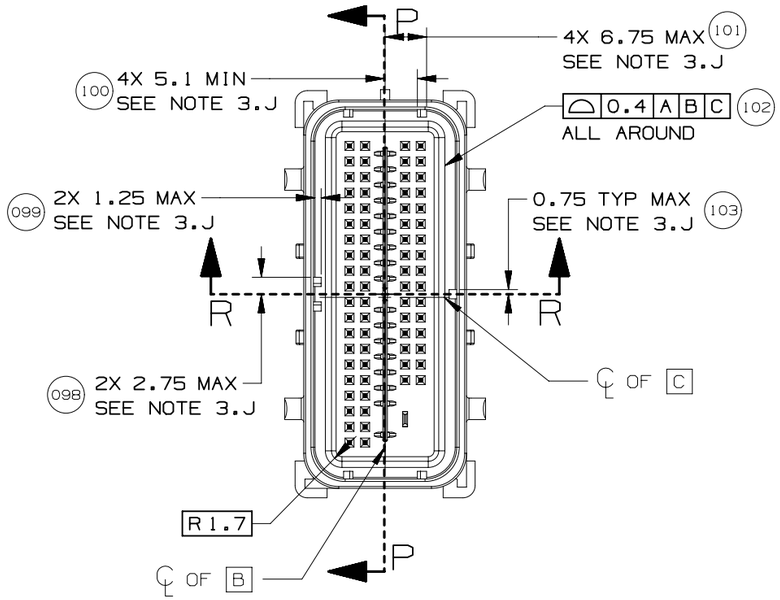

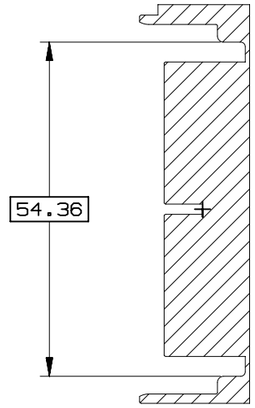

SECTION P-P

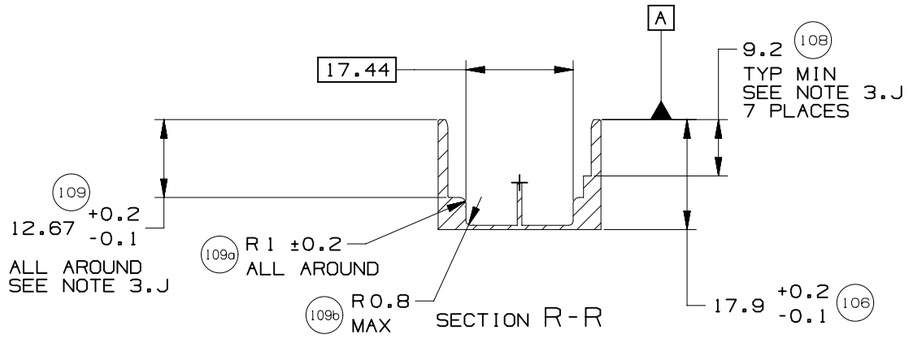

SECTION R-R

	GM	PAGE TITLE COMPONENT CONNECTOR INTERFACE		DRAWING NUMBER 12642695	DWG STATUS ST: R REV: 002 PDI:		PAGE NUMBER 19 OF 21

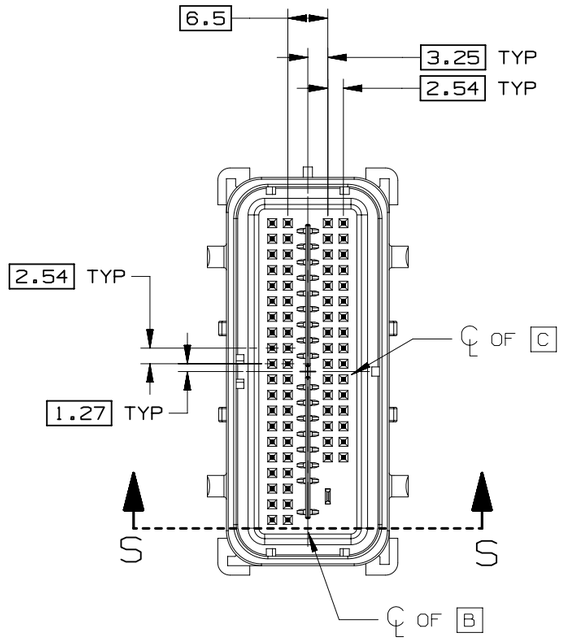

SECTION S-S

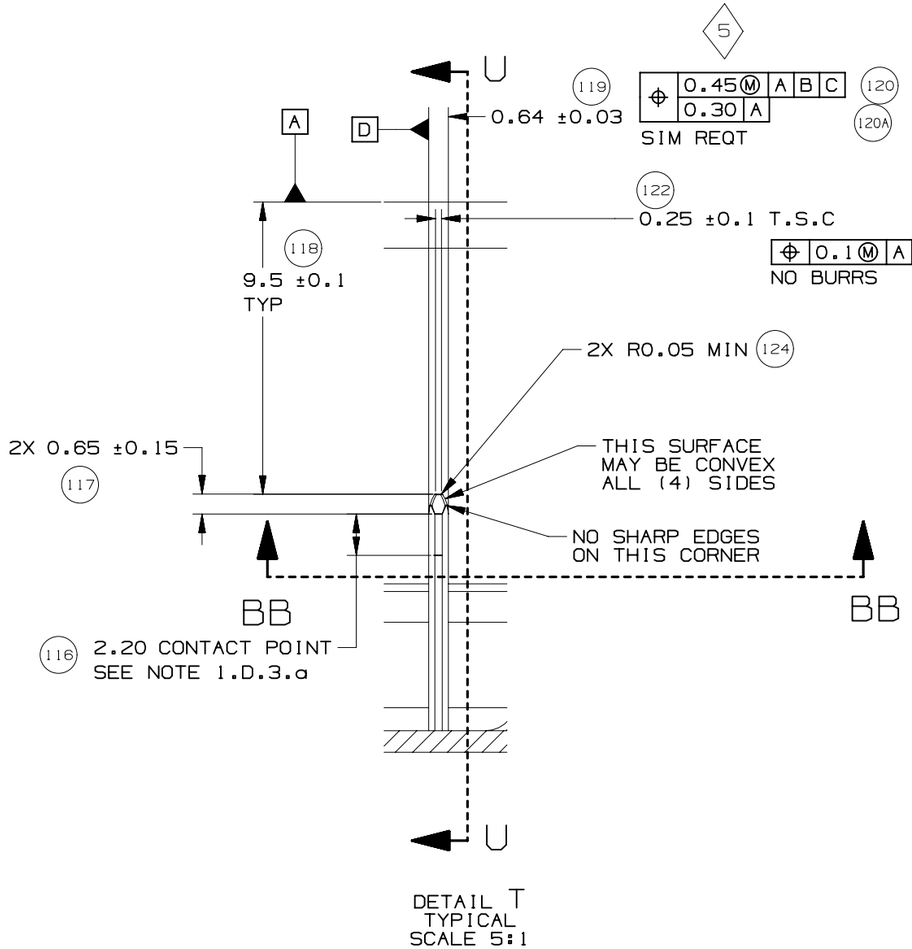

DETAIL T
TYPICAL
SCALE 5:1

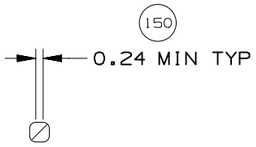

SECTION BB-BB

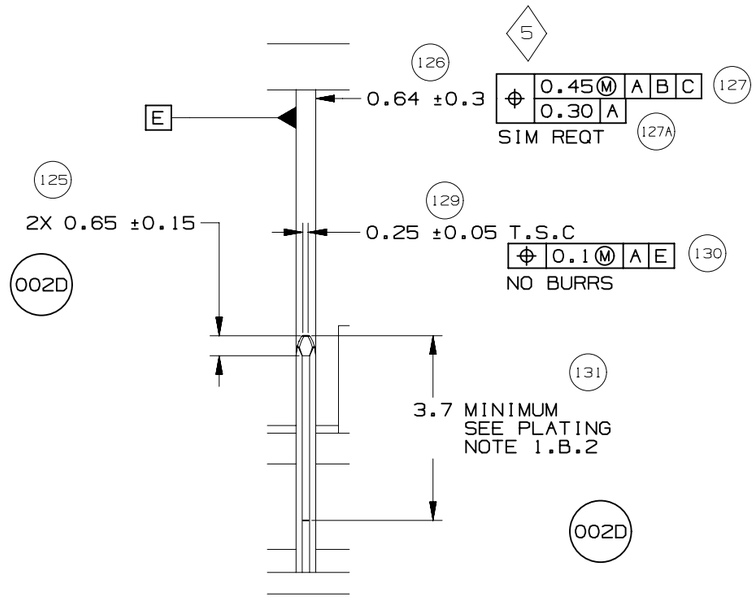

SECTION U-U

GM	PAGE TITLE: COMPONENT CONNECTOR INTERFACE		DRAWING NUMBER: 12642695	DWG STATUS ST: R	REV: 002	PDI:	PAGE NUMBER: 20 OF 21

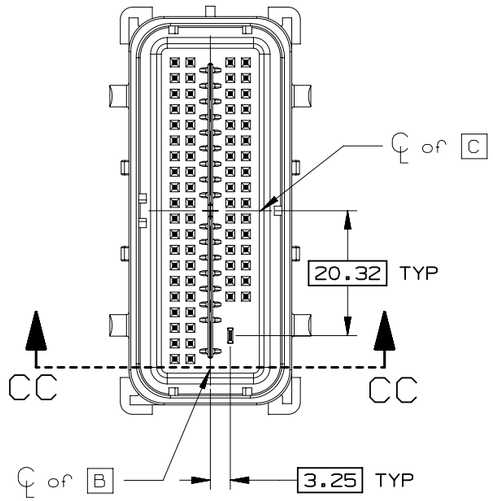

SECTION CC-CC

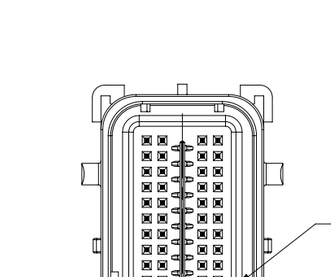

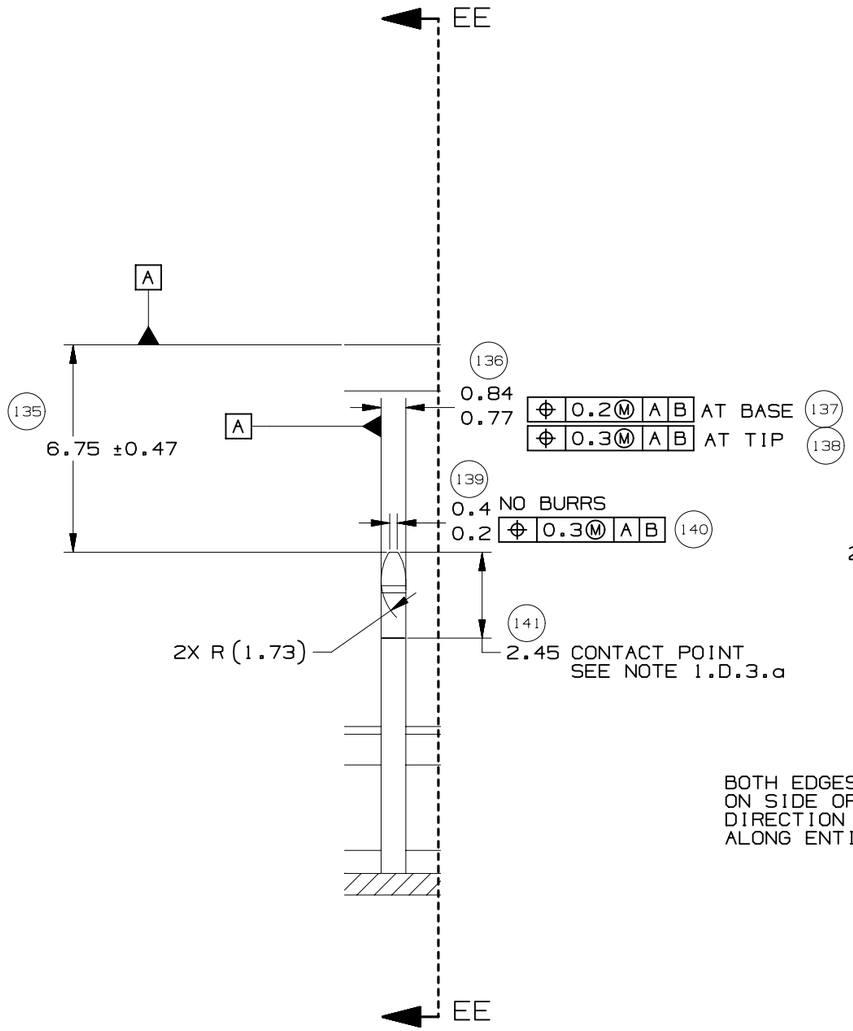

DETAIL DD
TYPICAL
SCALE 5:1

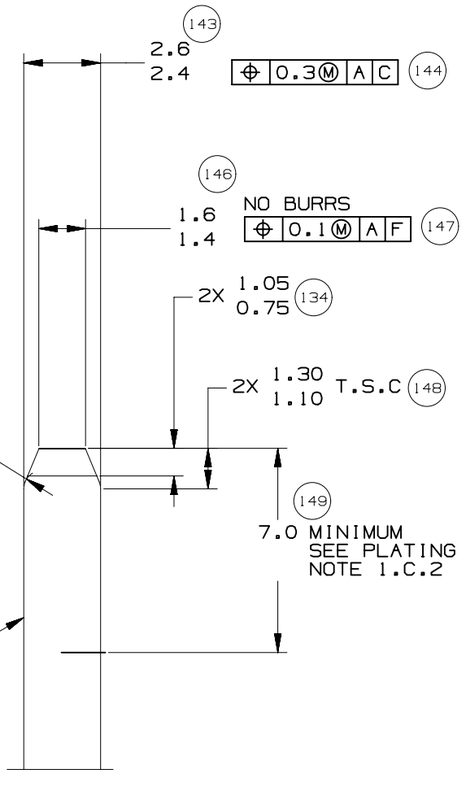

SECTION EE-EE
TYPICAL

	GM	PAGE TITLE: COMPONENT CONNECTOR INTERFACE		DRAWING NUMBER: 12642695	DWG STATUS: ST R / REV 002 / PDI		PAGE NUMBER: 21 OF 21

INDEX	
PAGE TITLE	PAGE
TITLE BLOCK	1
REVISION BLOCK	2
PART BLOCK	3
KPC BLOCK	4
COMPONENT TABLE	5
NOTES	6
NOTES	7
WIRE DRESS PACKAGING DIMENSIONS	8
LOCATION AND PACKAGING DIMENSIONS REFERENCING INTERFACE DATUMS B & C	9
LOCATION AND PACKAGING DIMENSIONS REFERENCING INTERFACE DATUM A	10
KEY ID REF - WIRE DRESS OPTION 0	11
KEY ID REF - WIRE DRESS OPTION 9	12
CIRCUIT CONFIGURATIONS	13
CIRCUIT CONFIGURATIONS	14
COMPONENT CONNECTOR INTERFACE	15
COMPONENT CONNECTOR INTERFACE	16
COMPONENT CONNECTOR INTERFACE	17
COMPONENT CONNECTOR INTERFACE	18
COMPONENT CONNECTOR INTERFACE	19
COMPONENT CONNECTOR INTERFACE	20
COMPONENT CONNECTOR INTERFACE	21

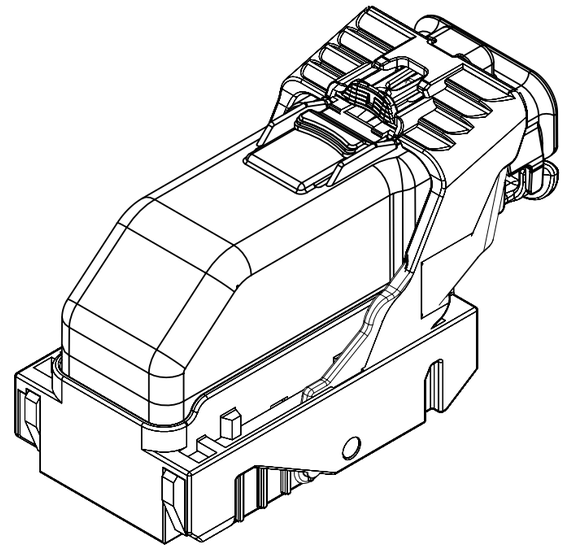

ISO VIEW

GM

UNLESS OTHERWISE SPECIFIED: THIS DOCUMENT IS IN ACCORDANCE WITH ASME Y14.5M-1994 AS AMMENDED BY THE GM GLOBAL DIMENSIONING AND TOLERANCING ADDENDUM-1997. ALL GEOMETRIC TOLERANCES AND RELATED DATUMS APPLY RFS. RULE #1 (PERFECT FORM AT MMC) DOES NOT APPLY WHEN A RELATIONSHIP BETWEEN FEATURES IS ESTABLISHED BY ORIENTATION OR LOCATION TOLERANCES. SEPARATE POSITION CALLOUTS MAY BE GAGED SEPARATELY REGARDLESS OF DATUM REFERENCES.

CHANGE RESTRICTED
NO MANUAL CHANGES

DO NOT SCALE

METRIC

DIMENSIONS SHOWN IN MILLIMETERS UNLESS OTHERWISE SPECIFIED

REFERENCE
12H (MOLEX AUTOMOTIVE)

		DATE
DRAFTER	J SZYMKOWSKI	22DE05
APVD1	D PFAFFINGER	22DE05
APVD2	B BURT	22DE05
APVD3		
APVD4		
APVD5		

DRAWING NAME
HARNESS CONN ASM
66/73/80 CKTS

DRAWING NUMBER
12642695

DWG STATUS		
ST	REV	PDI
R	002	

PAGE NUMBER
1 OF 21

PAGE	DWG STATUS					REVISION HISTORY	AUTH	DR	CK	ENG
	DATE	ST	REV	CHG	PDI					
	19DE11	R	001			RELEASED TO PRODUCTION AT DLS A	CRMRJB	SC	MRO	GF
3	08MY15	R	002	A		REORDERED PART BLOCK AND ADDED MASS CORRECTED P/N TYPO FROM 12562676 TO 12582676				
3, 5		R	002	B		ADDED 12659312, 12659313, 12653574 AND 12653575				
6		R	002	C		REMOVED NOTE 1 . D . 3 . C				
20		R	002	D		DIM 125 WAS 3.25 DIM 131 WAS 5.5	CRMRJD	DFK	MRO	GF

PAGE	DWG STATUS					REVISION HISTORY	AUTH	DR	CK	ENG
	DATE	ST	REV	CHG	PDI					

		PAGE TITLE		DRAWING NUMBER	DWG STATUS			PAGE NUMBER
	GM	REVISION BLOCK		12642695	ST	REV	PDI	2 OF 21
					R	002		

002A 002B

30	RD	12582676			C	003			0.011	WIRE HARNESS COVER	66/73/80 WAY
29	RD	AMJ29214			C	003			0.050	HARN CONN ASM 80 CKT	KEY M OPTION 9
28	RD	AMJ29136			C	003			0.050	HARN CONN ASM 80 CKT	KEY L OPTION 9
27	RD	AMJ29117			C	003			0.050	HARN CONN ASM 80 CKT	KEY K OPTION 9
26	RD	12615657			C	003			0.050	HARN CONN ASM 80 CKT	KEY J OPTION 9
25	RD	12603599			C	003			0.050	HARN CONN ASM 80 CKT	KEY H OPTION 9
24	RD	12603598			C	003			0.050	HARN CONN ASM 80 CKT	KEY G OPTION 9
23	RD	AMJ28669			C	003			0.050	HARN CONN ASM 80 CKT	KEY M OPTION 0
22	RD	AMJ29057			C	003			0.050	HARN CONN ASM 80 CKT	KEY L OPTION 0
21	RD	AMJ28595			C	003			0.050	HARN CONN ASM 80 CKT	KEY K OPTION 0
20	RD	12615656			C	003			0.050	HARN CONN ASM 80 CKT	KEY J OPTION 0
19	RD	12588058			C	004			0.050	HARN CONN ASM 80 CKT	KEY H OPTION 0
18	RD	12588057			C	003			0.050	HARN CONN ASM 80 CKT	KEY G OPTION 0
17	RD	12653575			C	002			0.050	HARN CONN ASM 73 CKT	KEY F OPTION 9
16	RD	AMJ28698			C	003			0.050	HARN CONN ASM 73 CKT	KEY E OPTION 9
15	RD	12647269			C	002			0.050	HARN CONN ASM 73 CKT	KEY D OPTION 9
14	RD	12615655			C	003			0.050	HARN CONN ASM 73 CKT	KEY C OPTION 9
13	RD	12603597			C	005			0.050	HARN CONN ASM 73 CKT	KEY B OPTION 9
12	RD	12603596			C	006			0.050	HARN CONN ASM 73 CKT	KEY A OPTION 9
11	RD	12653574			C	002			0.050	HARN CONN ASM 73 CKT	KEY F OPTION 0
10	RD	AMJ28633			C	003			0.050	HARN CONN ASM 73 CKT	KEY E OPTION 0
09	RD	12647268			C	002			0.050	HARN CONN ASM 73 CKT	KEY D OPTION 0
08	RD	12615654			C	005			0.050	HARN CONN ASM 73 CKT	KEY C OPTION 0
07	RD	12582678			C	008			0.050	HARN CONN ASM 73 CKT	KEY B OPTION 0
06	RD	12582677			C	010			0.050	HARN CONN ASM 73 CKT	KEY A OPTION 0
05	RD	12659313			2	001			0.050	HARN CONN ASM 66 CKT	KEY C OPTION 9
04	RD	12642693			C	002			0.050	HARN CONN ASM 66 CKT	KEY A OPTION 9
03	RD	12659312			2	001			0.050	HARN CONN ASM 66 CKT	KEY C OPTION 0
02	RD	12642692			C	003			0.050	HARN CONN ASM 66 CKT	KEY A OPTION 0
01	RD	12642695		A		002			3.408	HARNESS CONN ASM	
										DRAWING	

HIERARCHY /QUANTITY	DWG ITM	DWG RLTN SHIP	PART NUMBER	P-A ITM	D L S	ST	REV	P D I	N M C I	MASS (KG)	PART NAME	NOTES

PARTS SHOWN ON DRAWING

	PAGE TITLE		DRAWING NUMBER	DWG STATUS			PAGE NUMBER
GM	PART BLOCK		12642695	ST	REV	PDI	3 OF 21
				R	002		

KEY PRODUCT CHARACTERISTICS
(IN ACCORDANCE WITH QN 1805 OR QN 1050)

▽ SAFETY/COMPLIANCE

◇ FIT/FUNCTION

TOTAL ON DRAWING	5
LAST NO. USED	5

NO	TYPE	DESCRIPTION	RATIONALE	PAGE/ZONE
1	F/F	32.68	IMPROVE CONNECTOR SYSTEM MATING	15
2	F/F	29.00	INSURE PROPER RELEASE OF LEVER	15
3	F/F	15.25	INSURE FINAL MATE POSITION	16
5	F/F	POSITIONAL TOLERANCE (2 PLACES)	INSURE CONNECTOR SYSTEM MATEABILITY	19

					APPLICABLE COMPONENTS					
LINE	MFG.	MFG. P/N	GM P/N	EFFECTIVE DATE	DESCRIPTION	KEY OPTION	WIRE DRESS OPTION	KEY CONFIG.	COLOR	STATUS
-										
1	MOLEX	34565-0003	12582676	02JN03	MX123 DRESS COVER 66/73/80 CKT	N/A	N/A	N/A	BLACK	AVAILABLE
2	MOLEX	34822-0013	12642692	01SP13	MX123 HRNS CONN ASSY 66 CKT	A	0	1458	BLACK	AVAILABLE
3	MOLEX	34822-0033	12659312	01SP13	MX123 HRNS CONN ASSY 66 CKT	C	0	2467	BLUE	AVAILABLE
4	MOLEX	34822-0023	12642693	01SP13	MX123 HRNS CONN ASSY 66 CKT	A	9	1458	BLACK	AVAILABLE
5	MOLEX	34822-0043	12659313	01SP13	MX123 HRNS CONN ASSY 66 CKT	C	9	2467	BLUE	AVAILABLE
6	MOLEX	34566-0103	12582677	11JN04	MX123 HRNS CONN ASSY 73 CKT	A	0	1458	BLACK	AVAILABLE
7	MOLEX	34566-0203	12582678	11JN04	MX123 HRNS CONN ASSY 73 CKT	B	0	1468	ST GRAY	AVAILABLE
8	MOLEX	34566-0303	12615654	09AP08	MX123 HRNS CONN ASSY 73 CKT	C	0	2467	BLUE	AVAILABLE
9	MOLEX	34566-0403	12647268	T.B.D	MX123 HRNS CONN ASSY 73 CKT	D	0	2367	BROWN	NOT ACTIVE
10	MOLEX	34566-0503	AMJ28633	T.B.D	MX123 HRNS CONN ASSY 73 CKT	E	0	2468	GREEN	NOT ACTIVE
11	MOLEX	34566-0603	12653574	05DC14	MX123 HRNS CONN ASSY 73 CKT	F	0	1357	NATURAL	AVAILABLE
12	MOLEX	34566-0703	12588057	09AP08	MX123 HRNS CONN ASSY 80 CKT	G	0	1358	BLUE	AVAILABLE
13	MOLEX	34566-0803	12588058	11JN04	MX123 HRNS CONN ASSY 80 CKT	H	0	2458	ST GRAY	AVAILABLE
14	MOLEX	34566-0903	12615656	T.B.D	MX123 HRNS CONN ASSY 80 CKT	J	0	2457	BLACK	NOT ACTIVE
15	MOLEX	34566-1003	AMJ28595	T.B.D	MX123 HRNS CONN ASSY 80 CKT	K	0	2357	BROWN	NOT ACTIVE
16	MOLEX	34566-1103	AMJ29057	T.B.D	MX123 HRNS CONN ASSY 80 CKT	L	0	2368	GREEN	NOT ACTIVE
17	MOLEX	34566-1203	AMJ28669	T.B.D	MX123 HRNS CONN ASSY 80 CKT	M	0	2358	NATURAL	NOT ACTIVE
18	MOLEX	34566-1303	12603596	11JN04	MX123 HRNS CONN ASSY 73 CKT	A	9	1458	BLACK	AVAILABLE
19	MOLEX	34566-1403	12603597	11JN04	MX123 HRNS CONN ASSY 73 CKT	B	9	1468	ST GRAY	AVAILABLE
20	MOLEX	34566-1503	12615655	09AP08	MX123 HRNS CONN ASSY 73 CKT	C	9	2467	BLUE	AVAILABLE
21	MOLEX	34566-1603	12647269	T.B.D	MX123 HRNS CONN ASSY 73 CKT	D	9	2367	BROWN	NOT ACTIVE
22	MOLEX	34566-1703	AMJ28698	T.B.D	MX123 HRNS CONN ASSY 73 CKT	E	9	2468	GREEN	NOT ACTIVE
23	MOLEX	34566-1803	12653575	05DC14	MX123 HRNS CONN ASSY 73 CKT	F	9	1357	NATURAL	AVAILABLE
24	MOLEX	34566-1903	12603598	09AP08	MX123 HRNS CONN ASSY 80 CKT	G	9	1358	BLUE	AVAILABLE
25	MOLEX	34566-2003	12603599	11JN04	MX123 HRNS CONN ASSY 80 CKT	H	9	2458	ST GRAY	AVAILABLE
26	MOLEX	34566-2103	12615657	T.B.D	MX123 HRNS CONN ASSY 80 CKT	J	9	2457	BLACK	NOT ACTIVE
27	MOLEX	34566-2203	AMJ29117	T.B.D	MX123 HRNS CONN ASSY 80 CKT	K	9	2357	BROWN	NOT ACTIVE
28	MOLEX	34566-2303	AMJ29136	T.B.D	MX123 HRNS CONN ASSY 80 CKT	L	9	2368	GREEN	NOT ACTIVE
29	MOLEX	34566-2403	AMJ29214	T.B.D	MX123 HRNS CONN ASSY 80 CKT	M	9	2358	NATURAL	NOT ACTIVE
30	MOLEX	34736-2002	12642697	01AU10	MX64 RCPT TERM Ag 18/20 GAGE B (RIGHT PAYOFF)	N/A	N/A	N/A	N/A	AVAILABLE
31	MOLEX	34736-2001	12642696	01AU10	MX64 RCPT TERM Ag 22 GAGE B (RIGHT PAYOFF)	N/A	N/A	N/A	N/A	AVAILABLE
32	MOLEX	34586-0001	T.B.D.	11JN04	MX123 0.64MM GROMMET PLUG	N/A	N/A	N/A	NATURAL	AVAILABLE
33	YAZAKI	7116-4150-02	12588066	02JN03	2.8mm YESC SEALED FEMALE TERMINAL TIN 20/22 GAGE (CABLE RANGE 0.30mm-0.60mm)	N/A	N/A	N/A	N/A	NOT ACTIVE
34	YAZAKI	7116-4151-02	12588067	02JN03	2.8mm YESC SEALED FEMALE TERMINAL TIN 16/18 GAGE (CABLE RANGE 0.75mm-1.40mm)	N/A	N/A	N/A	N/A	NOT ACTIVE
35	YAZAKI	7116-4152-02	12582685	02JN03	2.8mm YESC SEALED FEMALE TERMINAL TIN 14 GAGE (CABLE RANGE 1.50mm-2.50mm)	N/A	N/A	N/A	N/A	AVAILABLE
36	YAZAKI	7158-3111-60	12588068	02JN03	2.8mm CABLE SEAL (wire O.D. range 1.20mm-1.90mm)	N/A	N/A	N/A	GREEN	NOT ACTIVE
37	YAZAKI	7158-3112-70	12588069	02JN03	2.8mm CABLE SEAL (wire O.D. range 1.80mm-2.30mm)	N/A	N/A	N/A	YELLOW	NOT ACTIVE
38	YAZAKI	7158-3113-40	12582686	02JN03	2.8mm CABLE SEAL (wire O.D. range 2.18mm-3.00mm)	N/A	N/A	N/A	WHITE	AVAILABLE
39	YAZAKI	7158-3114-90	T.B.D	02JN03	2.8mm YESC CAVITY PLUG	N/A	N/A	N/A	BLUE	AVAILABLE
40	MOLEX	63811-4200	XX019825	02JN03	MX64 TERM HAND CRIMP TOOL	N/A	N/A	N/A	N/A	AVAILABLE
41	MOLEX	63813-1400	XX019826	02JN03	MX64 TERM SERVICE TOOL	N/A	N/A	N/A	N/A	AVAILABLE
42	MOLEX	63865-8000	XX019827	02JN03	MX64 CRIMP APPLICATOR with TOOL KIT 18/20 GAGE PAYOFF DIRECTION D (left payoff) (contact Molex for payoff detail)	N/A	N/A	N/A	N/A	AVAILABLE
43	MOLEX	63865-8070	XX019828	02JN03	MX64 APPLICATOR TOOL KIT 18/20 GAGE	N/A	N/A	N/A	N/A	AVAILABLE
44	MOLEX	63865-8100	XX019829	02JN03	MX64 CRIMP APPLICATOR with TOOL KIT 22 GAGE PAYOFF DIRECTION D (left payoff) (contact Molex for payoff detail)	N/A	N/A	N/A	N/A	AVAILABLE
45	MOLEX	63865-8170	XX019830	02JN03	MX64 APPLICATOR TOOL KIT 22 GAGE	N/A	N/A	N/A	N/A	AVAILABLE
46	SPX	J35616-64	T.B.D.	02JN03	0.64mm PROBE TOOL (for rcpt)	N/A	N/A	N/A	N/A	AVAILABLE
47	SPX	J35616-64A	T.B.D.	02JN03	0.64mm PROBE TOOL WITH EXT (for rcpt)	N/A	N/A	N/A	N/A	AVAILABLE
48	SPX	J35616-65	T.B.D.	02JN03	0.64mm PROBE TOOL WITH EXT (for pin)	N/A	N/A	N/A	N/A	AVAILABLE
49	SPX	J35616-4A	T.B.D.	02JN03	2.8mm PROBE TOOL (for rcpt)	N/A	N/A	N/A	N/A	AVAILABLE
50	YAZAKI	X39899-J374	12094430	02JN03	2.8mm TERM SERVICE TOOL	N/A	N/A	N/A	N/A	AVAILABLE

002B

* - MX123 DRESS COVER 73/80/66 CKT MATES TO ANY MX123 HARN CONN ASSY SHOWN ON TABLE ABOVE

	GM	PAGE TITLE: COMPONENT TABLE		DRAWING NUMBER: 12642695	DWG STATUS: ST R / REV 002 / PDI	PAGE NUMBER: 5 OF 21

NOTES: UNLESS OTHERWISE SPECIFIED

1. MATERIAL FOR INTERFACE:

A. RESIN:
   1. 30% G.F. PBT; 20% MAX. (BY WEIGHT) REGRIND.
   2. MATING CONNECTOR INTERFACE PART COLOR MUST BE SAME AS MATCHING KEYED HARNESS CONNECTOR ASSEMBLY.
   3. MUST BE VALIDATED FOR INDIVIDUAL DEVICE APPLICATION REQUIREMENTS.

B. 0.64MM PINS:
   1. BASE MATERIAL: COPPER ALLOY; CONDUCTIVITY >= 28% IACS AT 20°C; TENSILE STRENGTH >= 635 N/mm²;SURFACE ROUGHNESS R_a 6 MAX.
   2. PLATING FINISH: SILVER (Ag). PLATING TO BE 1.9-3.3 um ELECTRODEPOSITED SEMI-BRIGHT SILVER OVER 1.25-2.25 um DUCTILE SULPHAMATE NICKEL PER NOTE 1(D).
   3. ANTI-TARNISH: SYNTHETIC HYDROCARBON CONTACT SURFACE FINISH OR EQUIVALENT APPLIED WITHOUT VOID TO CONTACT AREA (MIN 3.7mm FROM PIN TIP).

C. 2.8MM BLADE:
   1. BASE MATERIAL: COPPER ALLOY; CONDUCTIVITY>= 28% IACS AT 20°C; TENSILE STRENGTH >= 350 N/mm²; SURFACE ROUGHNESS R_a 6 MAX.
   2. PLATING FINISH: TIN. PLATING TO BE 2.5-5.0 um ELECTRODEPOSITED TIN, MATTE FINISH OVER 1.25-2.5um DUCTILE SULPHAMATE NICKEL PER NOTE 1(D).

D. PLATING REQUIREMENTS:

1. SILVER PLATING
   a. 99.5% PURE SEMI-BRIGHT WITH NO ORGANIC BRIGHTNERS OR CHROMATES.

2. NICKEL PLATING
   a. ELECTRODEPOSITED DUCTILE SULFAMATE NICKEL WITH A NON-BRIGHTENED FINISH. NO ORGANIC OR BRIGHTENING AGENTS SHALL BE ALLOWED.
   b. SHALL ONLY BE USED AS AN UNDERLYING PLATING AND MAY NOT BE USED AS AN ELECTRICAL CONTACT SURFACE PLATING.
   c. SHALL BE NODULE FREE WHEN VIEWED AT 10X MAGNIFICATION IN MEASURED IN CONTACT SURFACE AREA PLUS 0.5MM PERIMETER AROUND THE CONTACT SURFACE AREA.
   d. ALL PLATINGS SHALL HAVE A 1.0% MAXIMUM BY WEIGHT IMPURITIES. IMPURITIES ARE DEFINED AS ALL ELEMENTS NOT THE PRIMARY PLATING OR HARDENING AGENT IF APPLICABLE, AS DETERMINED BY WET CHEMICAL ANALYSIS OR AUGER METHOD. NO SINGLE IMPURITY SHALL EXCEED 0.1% MAXIMUM BY WEIGHT.

3. TESTING
   a. THICKNESS TO BE MEASURED IN CONTACT SURFACE AREA PLUS 0.5MM PERIMETER AROUND THE CONTACT SURFACE AREA AS DESIGNATED IN THE DRAWING. THICKNESS SHALL BE DETERMINED BY METHOD OF X-RAY (XRF).
   b. PLATING ADHESION SHALL BE TESTED BY A BEND TEST FOR ALL METALS. THE TEST SAMPLE SHALL BE BENT 90 DEGREES TO DETERMINE DEPOSIT ADHESION. TESTING SHALL BE COMPLETED IN ACCORDANCE WITH ASTM SPEC B571.

002C

2. DESIGN - GENERAL:

A. THIS IS A 100% CAD GENERATED PART. THE CAD MATHEMATICAL DATA IS THE MASTER FOR THIS PART. FOR DIMENSIONAL OR ANY INFORMATION NOT SHOWN ON THIS DRAWING, ANALYZE THE CAD MODEL.
B. TOLERANCES:
   1. LINEAR 0.X ± 0.30
              0.XX ± 0.10
              0.XXX ± 0.10
   2. ANGULAR X° ± 3°
   3. ⌓ | 1.0 | A | B | C
C. MINIMUM WALL THICKNESS REQUIRED: 1.3mm.
D. CORNERS SHOWN AS SHARP TO BE R 0.2 MAX.
E. LETTERING SHALL BE 0.15 MAX RAISED IN 0.20 MAX RECESS PAD. THIS INCLUDES MATERIAL CODE, RECYCLING CODE, CAVITY ID AND DATE CODE.
F-1. PARTS MUST BE FREE OF DISCOLORATION, SALT RESIDUE AND OTHER IMPERFECTIONS THAT AFFECT FIT OR FUNCTION.
F-2. SCRATCHES OR DENTS NOT TO EXCEED 0.013mm IN DEPTH.
G. FOLLOWING PRODUCTION CODES TO BE PERMANENTLY MARKED & HUMAN READABLE TO A LETTER HEIGHT OF 1.5 ±0.5MM X 0.3 MAX DEEP
   1. MATERIAL #: XXXXX-XXXX
   2. DATE CODE: JJJY (JULIAN DAY, LAST DIGIT OF YEAR)
   3. INSPECTION MACHINE CODE + SERIAL #: X_XXXXX

3. DESIGN - MANUFACTURING:

A. DRAFT TO BE WITHIN TOLERANCE.
B. ALLOWABLE FLASH MAX 0.2 HIGH X MAX 0.13 THICK.
C. ALLOWABLE PARTING LINE MISMATCH 0.2 MAX.
D. EJECTOR PINS MARK TO BE FLUSH TO 0.25 MAX DEPRESSED.
E. ALLOWABLE GATE VESTIGE FLUSH TO 0.25 MAX PROTRUSION.
F. NO EXTERNAL MOLD RELEASE AGENT ALLOWED DURING MANUFACTURING.
G. STEEL THAT FORMS THE INDICATED SURFACE MUST BE POLISHED WITH A DIAMOND FINISH (SPI A-2) OVER THE FULL PERIPHERY OF THE TOOL. SURFACE MUST HAVE NO MISMATCH.
H. ANY PROCESS LUBRICANT REMAINING ON THE TERMINAL MUST NOT VARNISH OR DEGRADE IT'S ELECTRICAL PERFORMANCE UP TO A MAXIMUM CLASS AMBIENT TEMPERATURE PER SAE USCAR-2 FOR 1008 HOURS. PROCESS LUBRICANTS SHOULD BE APPROVED BY THE RESPONSIBLE ENGINEER.
J. OPTIONAL FEATURES PROVIDED FOR AUTOMATION.
K. PART MUST BE FREE FROM BURRS AND SHARP EDGES, WHICH MIGHT BE DETRIMENTAL TO SATISFACTORY ASSEMBLY, SAFE HANDLING OR FUNCTION OF PART.
L. PARTS AS DELIVERED TO ASSEMBLY SHALL BE CLEAN AND FREE OF DEBRIS, RESIDUAL ABRASIVE MATERIAL AND CORROSION PRODUCTS ADVERESLY AFFECTING FUNCTION OR APPEARENCE.
M. RESTRICTED AND REPORTABLE SUBSTANCES FOR PARTS PER GMW3059.

NOTES: UNLESS OTHERWISE SPECIFIED

4. SYSTEM REQUIREMENTS:

A. HARNESS CONNECTOR IS COMPATIBLE WITH THE FOLLOWING SAE WIRE SIZE NO'S:
14, MEETING SAE J1128
18, MEETING SAE J1128, MAX O.D. OF 2.06 MM
20, MEETING SAE J1128
22, MEETING SAE J1128, MIN O.D. OF 1.47 MM

B. CABLE TIE SPECIFICATIONS:
1. CABLE TIE:
TENSILE RATING: 220N / (50lbs) MIN
TIE LENGTH: 186mm MIN
TIE WIDTH: 4.75mm MAX
MATERIAL: NYLON
2. INSTALLATION:
CABLE TIE TENSION: 190N MIN
3. DRESSED WIRE BUNDLE PACKAGING: SEE FIG. 1

C. WHEN MATED WITH COMPONENT CONNECTOR INTERFACE AND/OR DRESS COVER, HARNESS CONNECTOR SYSTEM CONFORMS TO THE FOLLOWING:
1. SAE/USCAR-2, REV: 3 APRIL, 2001; CLASS 3
2. FIELD CORRELATED LIFE TEST, SAE/USCAR-20, NOV. 2001
3. GMW #3191 AUGUST 22, 2000 (DRAFT); TEMPERATURE CLASS 3, SEALING CLASS 1, VIBRATION CLASS 2
4. RESTRICTED AND REPORTABLE CHEMICALS PER GMW #3059, REV: D AUGUST 2002
5. TPA USER FORCES (FULLY POPULATED WITH TERMINALS)
a. REMOVAL FROM LOCK TO PRE-SET: <=120N

D. WIRE SPECIFICATIONS:
1. WIRE SURFACE MUST BE FREE OF SCRATCHES, GROOVES OR DENTS WHERE FUNCTIONAL

5. TERMINAL CURRENT RATINGS:

ALL TESTING DONE IN ACCORDANCE WITH USCAR-2 REV5 SECTION 5.3

A. MX64 RCPT TERM
1. MX64 RCPT TERM Ag 18/20 GAGE CRIMPED TO SAE WIRE SIZE NO.18 AND MATED TO MX123 0.64MM PIN: 11.3 AMPS
2. MX64 RCPT TERM Ag 22 GAGE CRIMPED TO SAE WIRE SIZE NO.22 AND MATED TO MX123 0.64MM PIN:8.5 AMPS

WIRE	CURRENT RATING			
	23'C	85'C	105'C	125'C
18AWG	11.3A	11.3A	9.5A	6.6A
20AWG	10.0A	10.0A	8.3A	5.7A
22AWG	8.6A	8.6A	7.1A	5.0A

B. 2.8MM RCPT TERM
1. 2.8MM RCPT TERM TIN 14 GAGE CRIMPED TO SAE WIRE SIZE NO.14 AND MATED TO MX123 2.8MM BLADE: 25.6 AMPS

6. CONTACT MOLEX AUTOMOTIVE FOR AVAILABLE CUSTOM PATTERNS OF CAVITIES OPEN FOR CIRCUITS

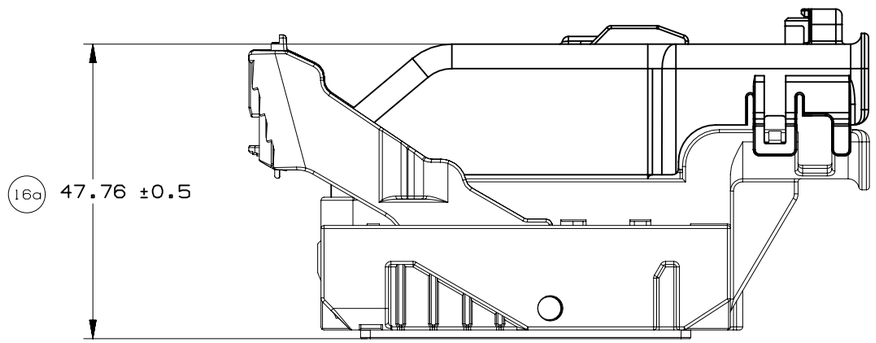

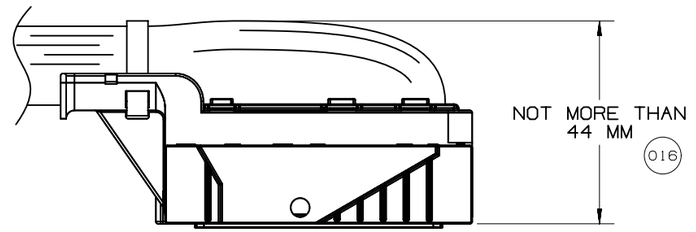

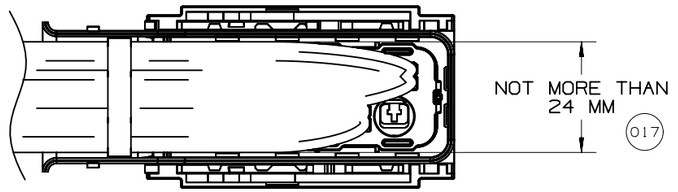

Fig. 1

	GM	PAGE TITLE WIRE DRESS PACKAGING DIMENSIONS		DRAWING NUMBER 12642695	DWG STATUS ST: R / REV: 002 / PDI:		PAGE NUMBER 8 OF 21

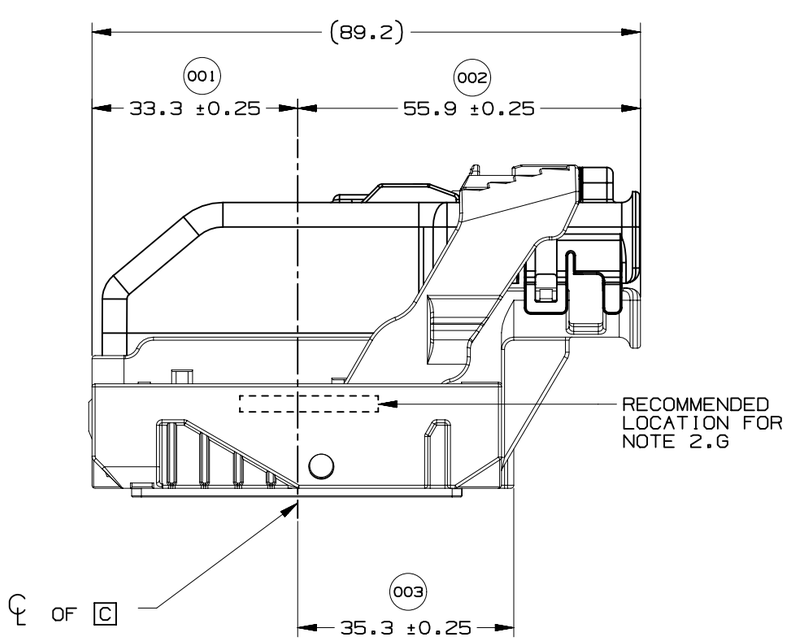

WIRE DRESS OPTION 0 SHOWN

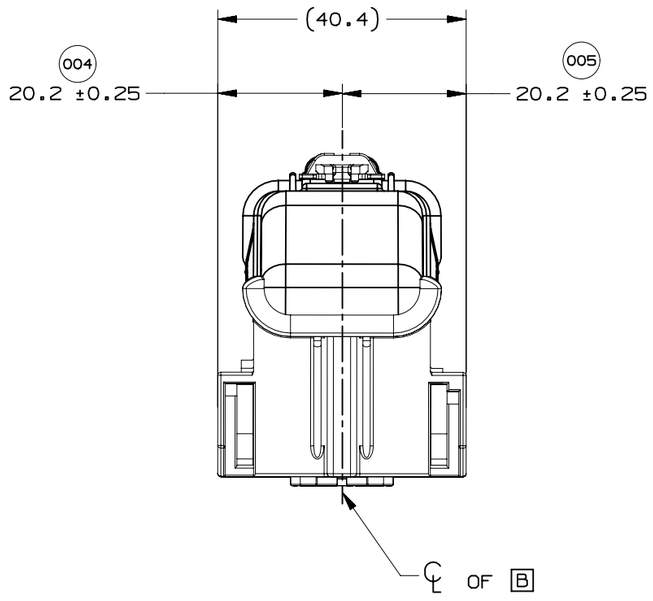

WIRE DRESS OPTION 0 SHOWN

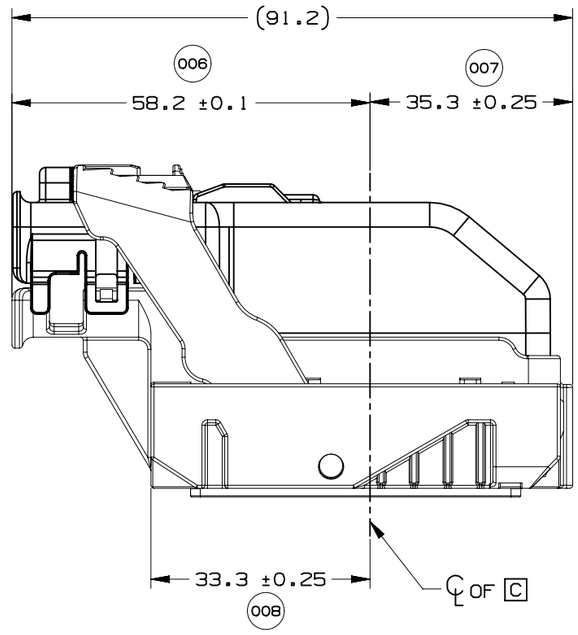

WIRE DRESS OPTION 9 SHOWN

	GM	PAGE TITLE LOCATION AND PACKAGING DIMENSIONS REFERENCING INTERFACE DATUMS B & C		DRAWING NUMBER 12642695	DWG STATUS ST: R / REV: 002 / PDI:		PAGE NUMBER 9 OF 21

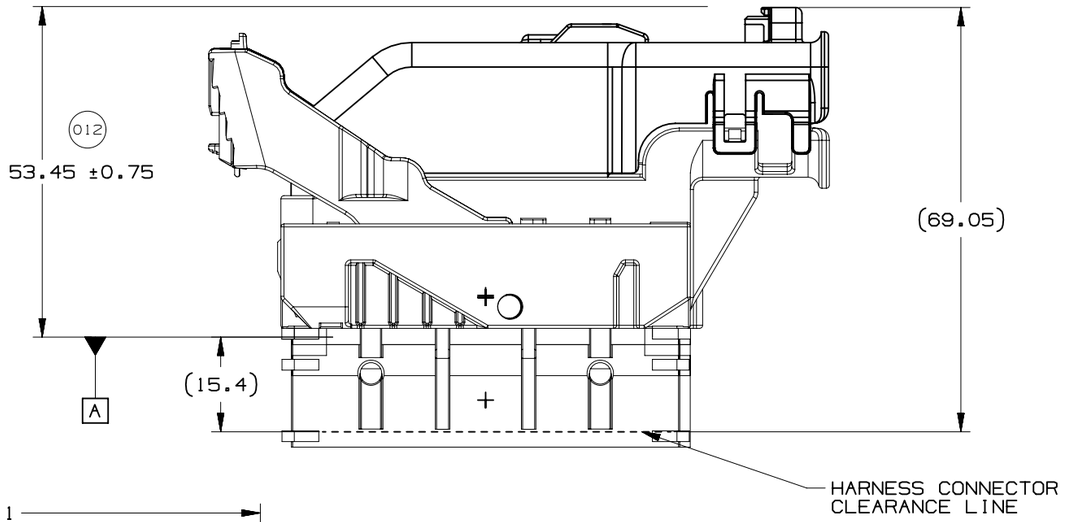

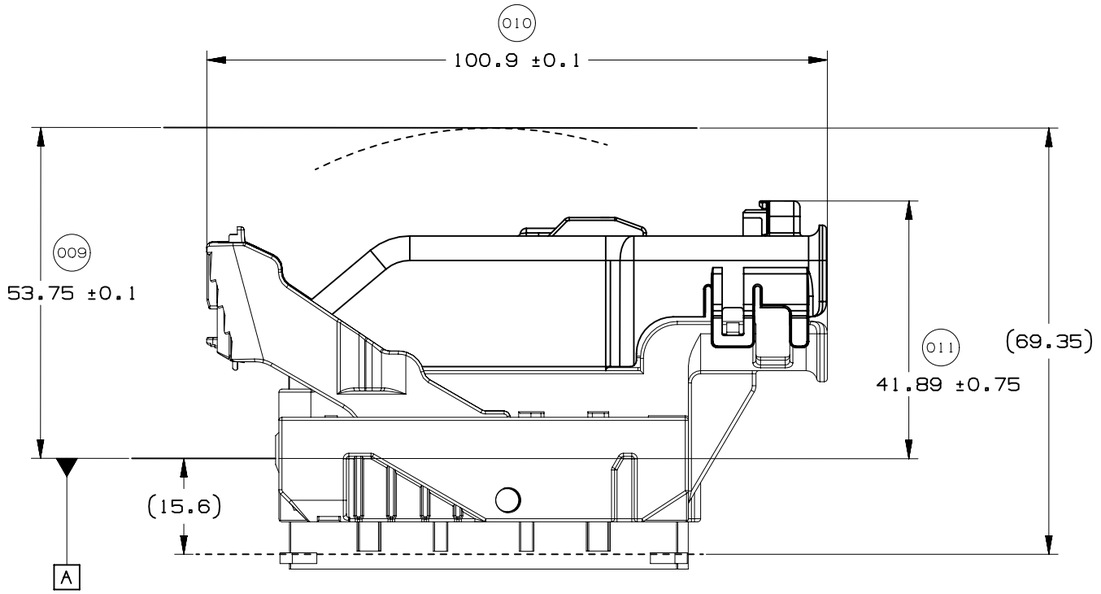

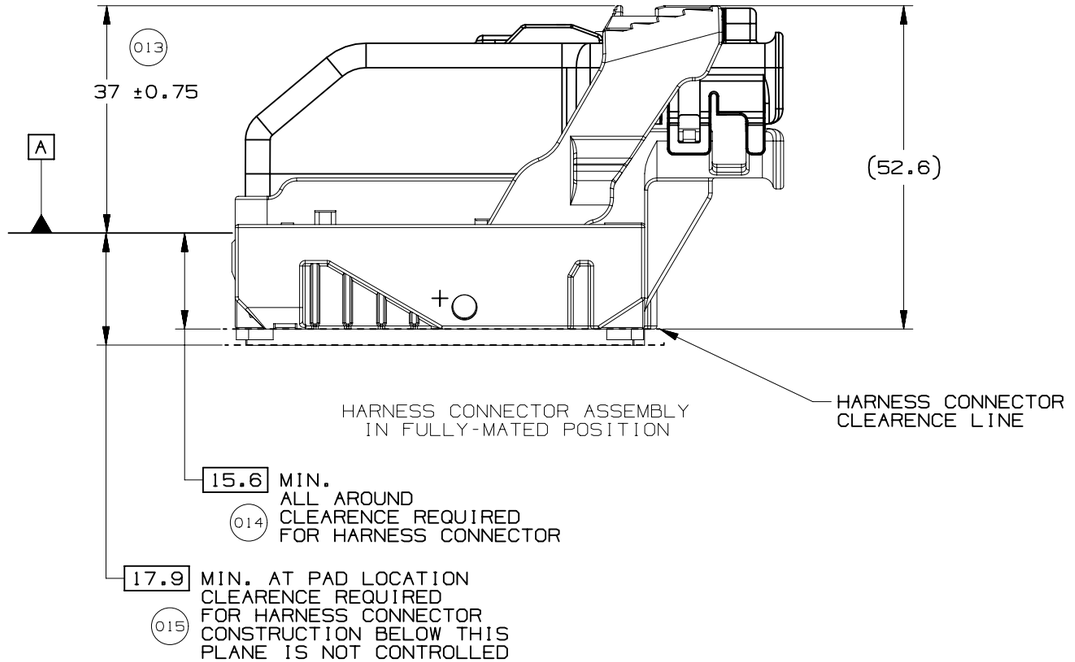

	GM	PAGE TITLE LOCATION AND PACKAGING DIMENSIONS REFERENCING INTERFACE DATUM A		DRAWING NUMBER 12642695	DWG STATUS ST: R / REV: 002 / PDI:	PAGE NUMBER 10 OF 21

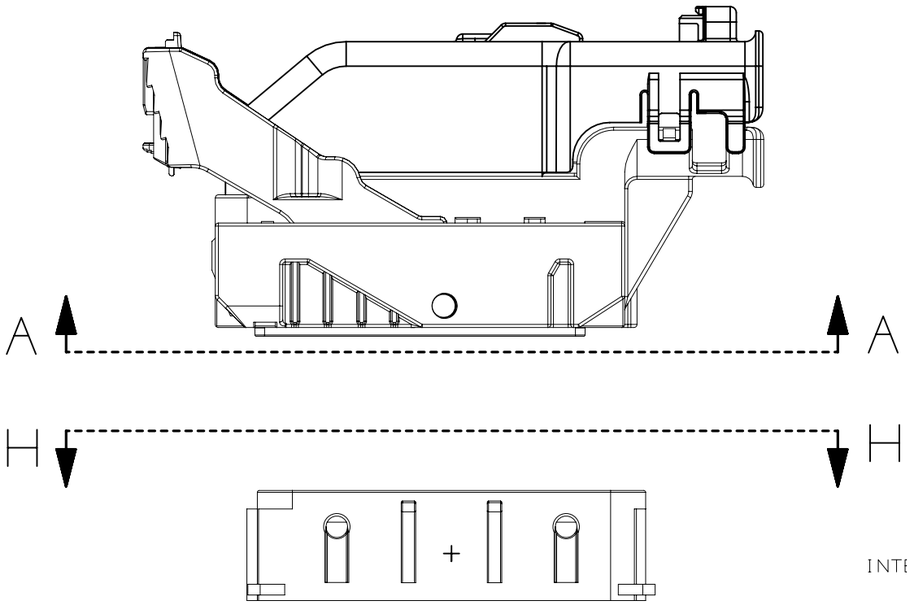

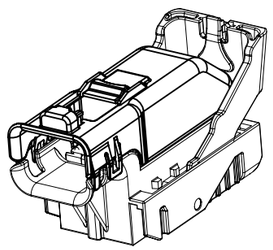

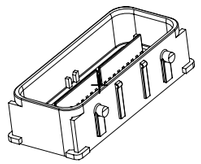

NOTE: REFERENCE THE COMPONENT TABLE FOR KEY OPTIONS AND CONFIGURATIONS

INTERFACE SIDE SHOWN ON ALL SECTION VIEWS

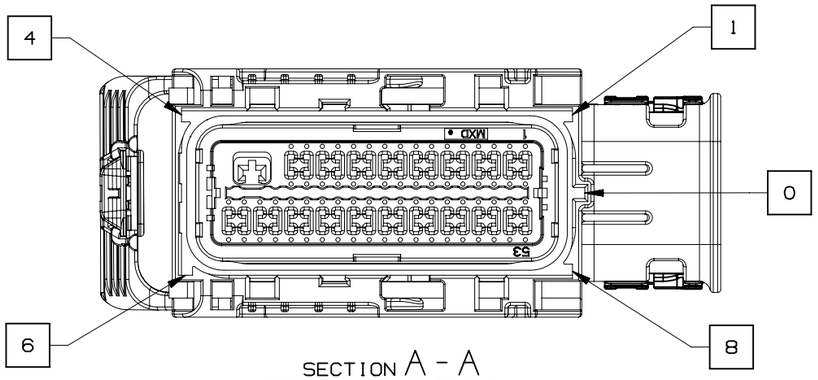

SECTION A - A
KEY OPTION B SHOWN

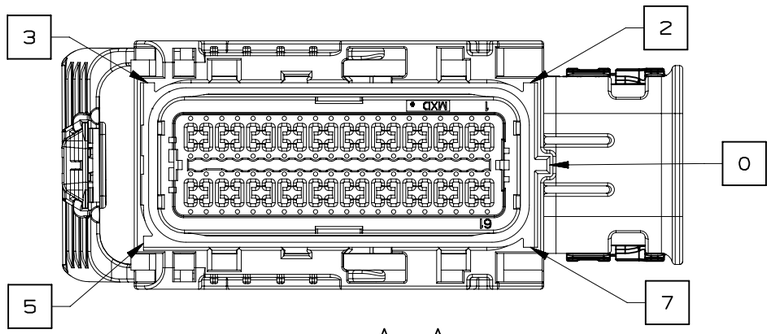

SECTION A - A
KEY OPTION K SHOWN

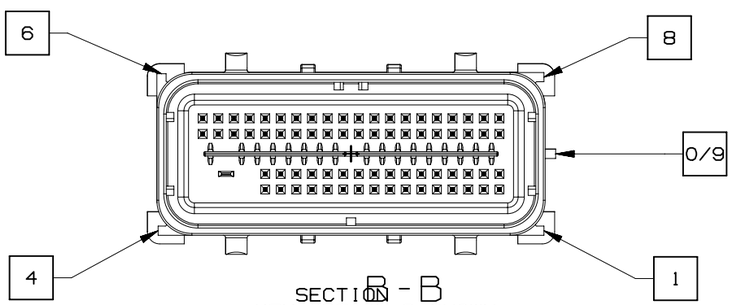

SECTION B - B
KEY OPTION B SHOWN

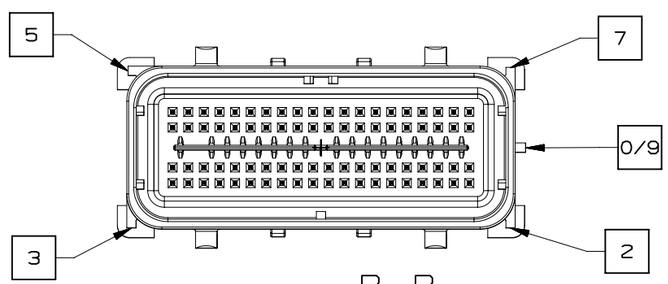

SECTION B - B
KEY OPTION K SHOWN

	GM	PAGE TITLE: KEY ID REF - WIRE DRESS OPTION 0		DRAWING NUMBER: 12642695	DWG STATUS: ST R / REV 002 / PDI	PAGE NUMBER: 11 OF 21

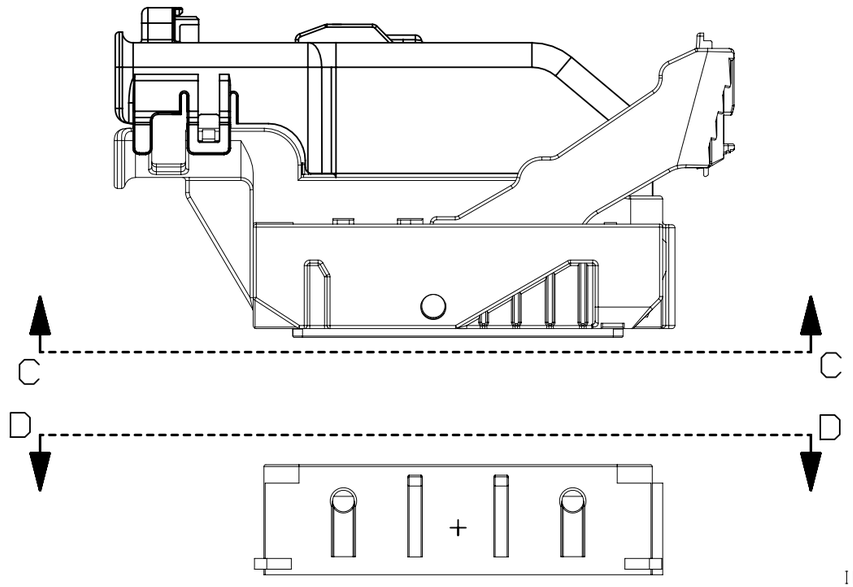

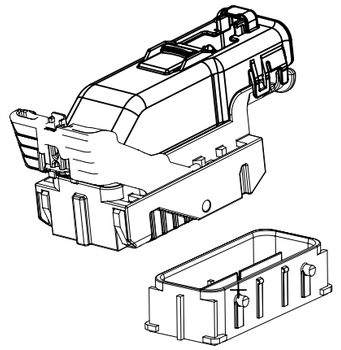

NOTE: REFERENCE THE COMPONENT TABLE FOR KEY OPTIONS AND CONFIGURATIONS

INTERFACE SIDE SHOWN ON ALL SECTION VIEWS

VIEW V

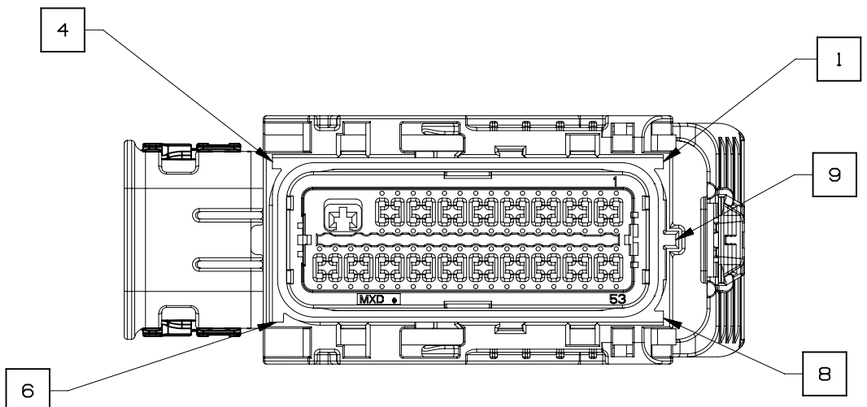

SECTION C-C
KEY OPTION B SHOWN

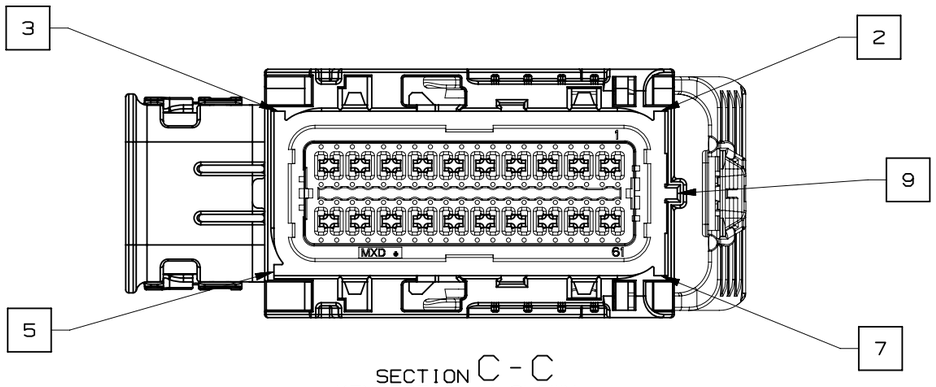

SECTION C - C
KEY OPTION K SHOWN

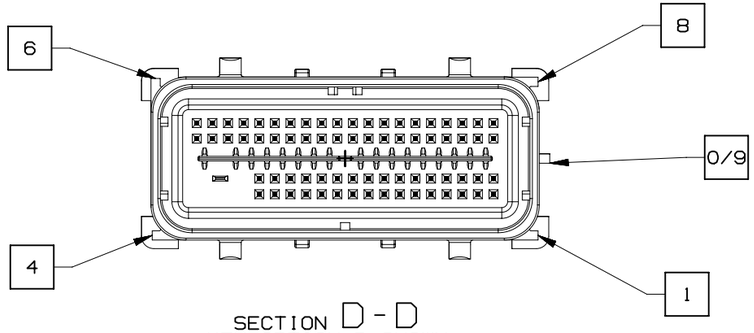

SECTION D - D
KEY OPTION B SHOWN

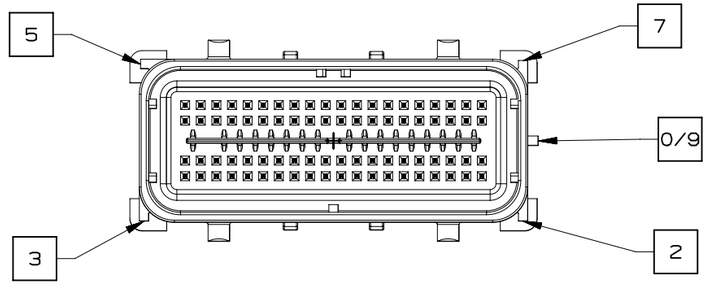

SECTION D - D
KEY OPTION K SHOWN

	GM	PAGE TITLE: KEY ID REF - WIRE DRESS OPTION 9		DRAWING NUMBER: 12642695	DWG STATUS ST: R	REV: 002	PDI:	PAGE NUMBER: 12 OF 21

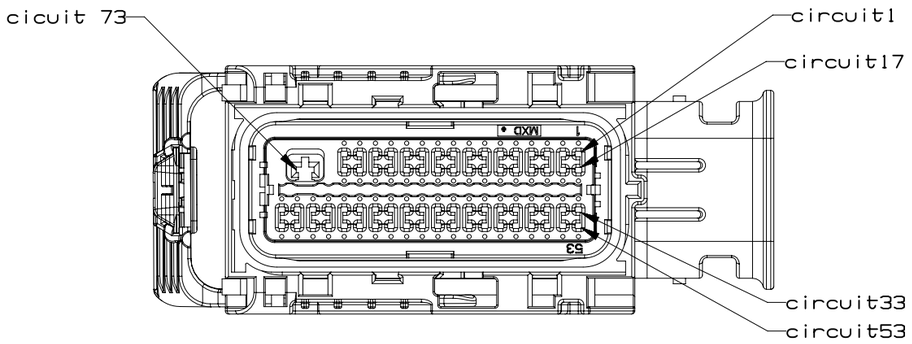

73 CKT HARNESS CONNECTOR ASSEMBLY
WIRE DRESS OPTION 0

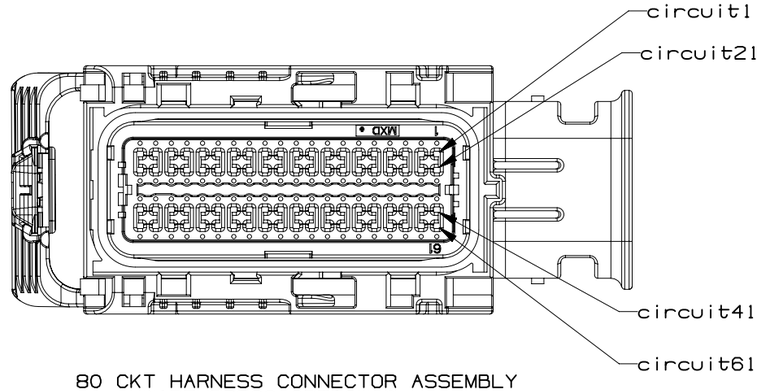

80 CKT HARNESS CONNECTOR ASSEMBLY
WIRE DRESS OPTION 0

INTERFACE SIDE SHOWN ON ALL VIEWS

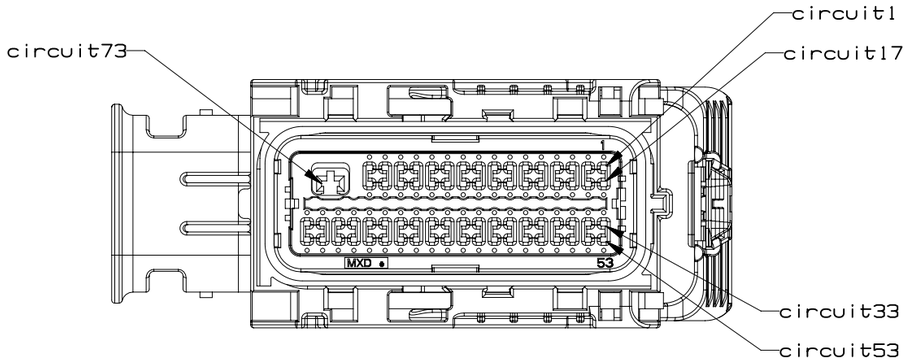

73 CKT HARNESS CONNECTOR ASSEMBLY
WIRE DRESS OPTION 9

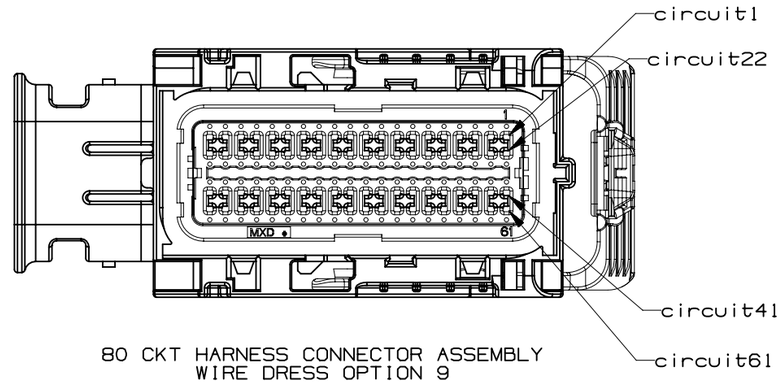

80 CKT HARNESS CONNECTOR ASSEMBLY
WIRE DRESS OPTION 9

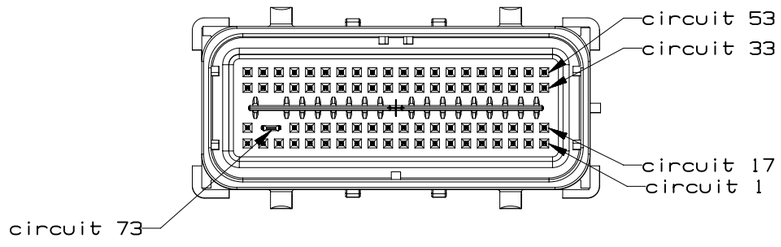

73 CKT COMPONENT CONNECTOR INTERFACE

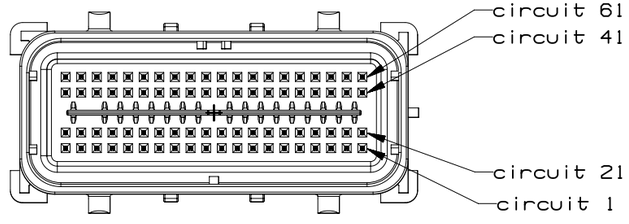

80 CKT COMPONENT CONNECTOR INTERFACE

	GM	PAGE TITLE: CIRCUIT CONFIGURATIONS		DRAWING NUMBER: 12642695	DWG STATUS		PAGE NUMBER
					ST: R	REV: 002	PDI:	13 OF 21

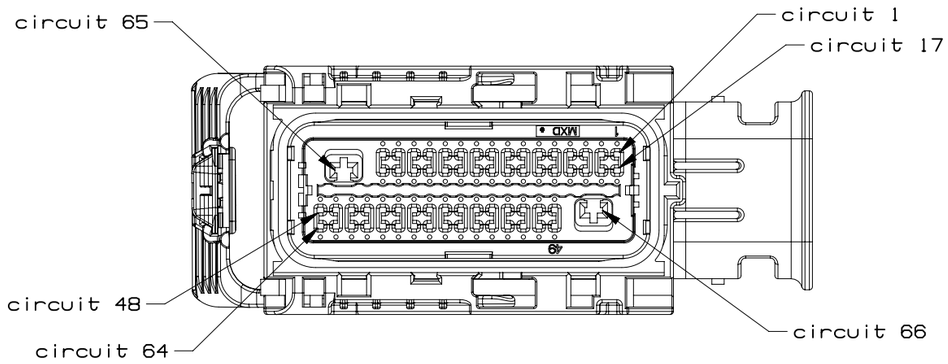

66 CKT HARNESS CONNECTOR ASSEMBLY
WIRE DRESS OPTION 0

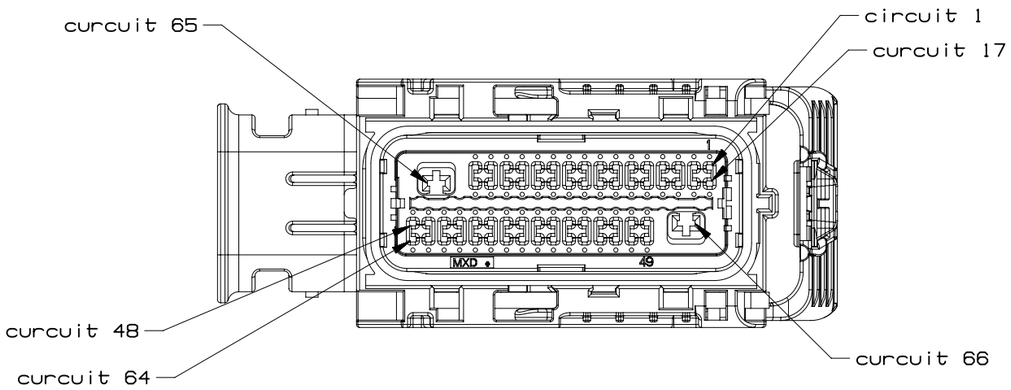

66 CKT HARNESS CONNECTOR ASSEMBLY
WIRE DRESS OPTION 9

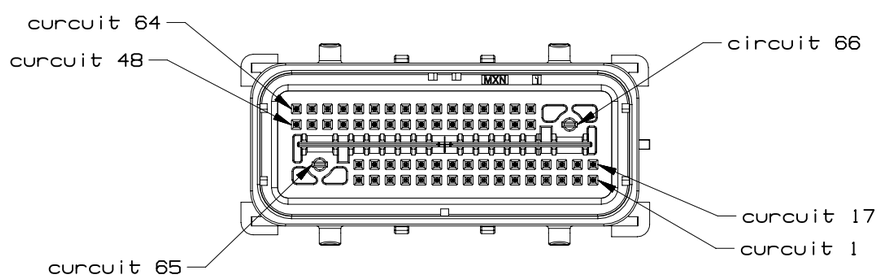

66 CKT COMPONENT CONNECTOR INTERFACE

	GM	PAGE TITLE CIRCUIT CONFIGURATIONS		DRAWING NUMBER 12642695	DWG STATUS ST: R REV: 002 PDI:		PAGE NUMBER 14 OF 21

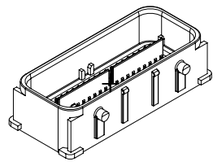

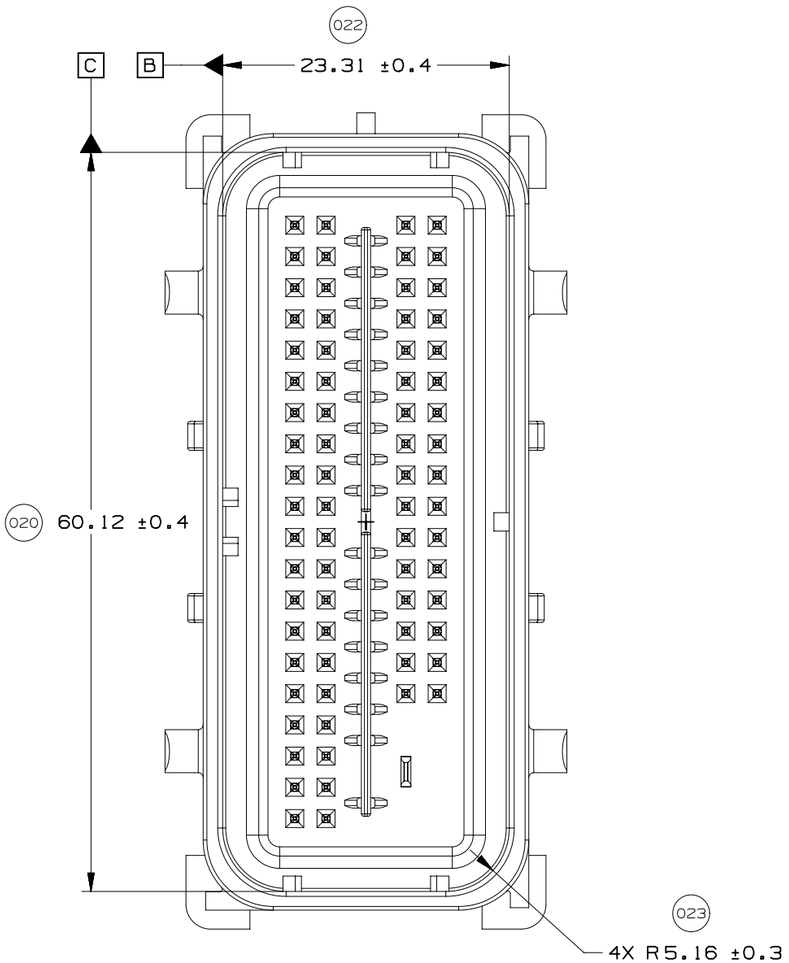

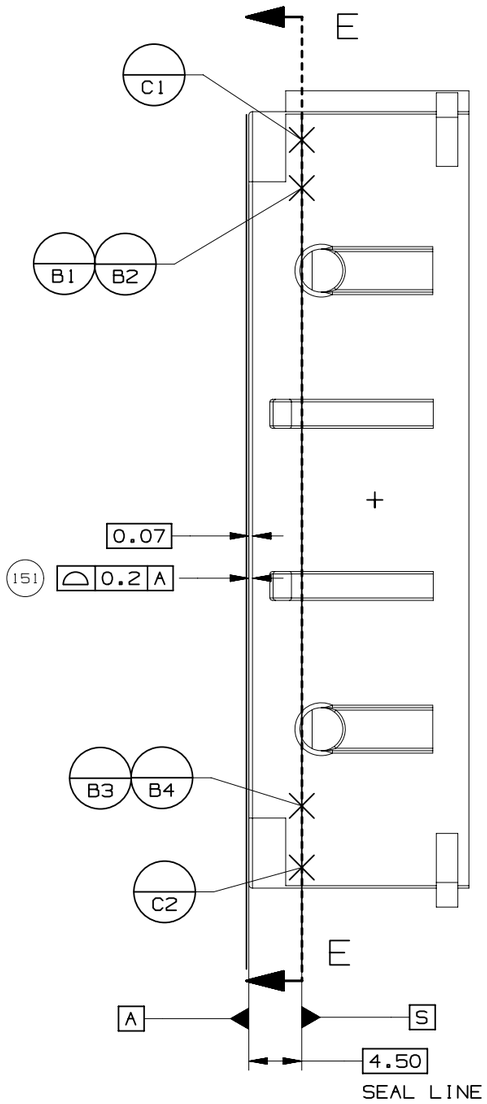

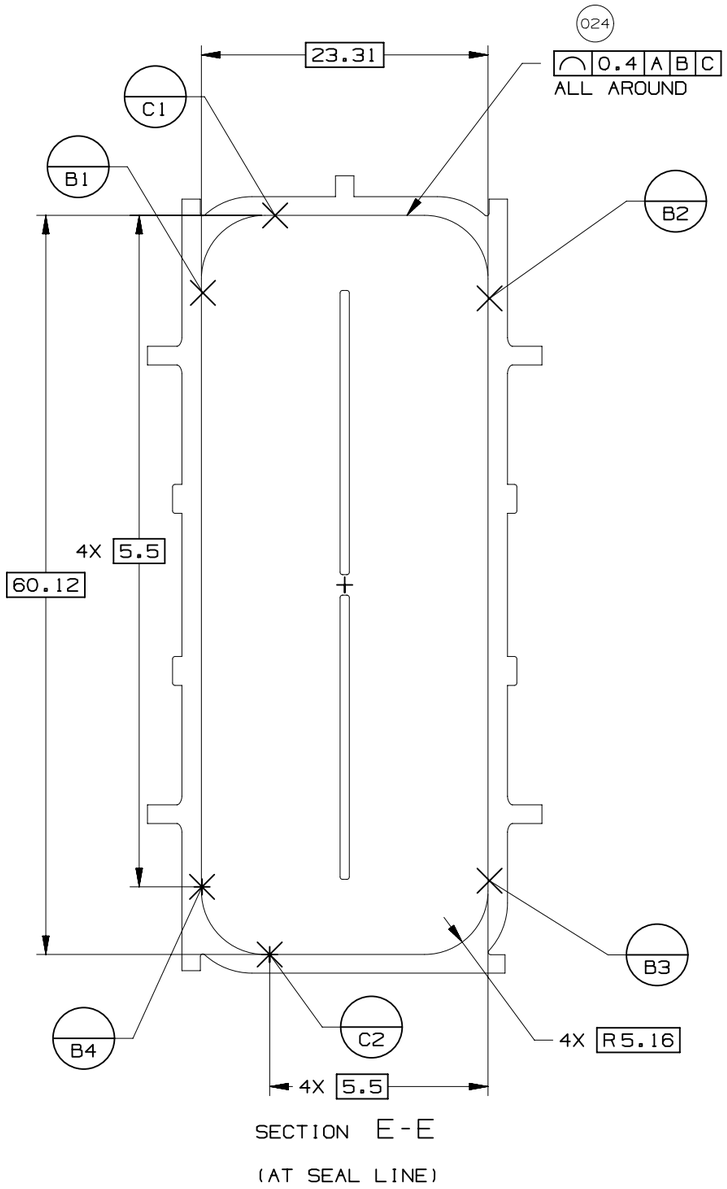

UNLESS SPECIFIED, TOLERANCE OF THE COMPONENT CONNECTOR INTERFACE TO BE 0.13 A B C

GM	PAGE TITLE: COMPONENT CONNECTOR INTERFACE		DRAWING NUMBER: 12642695	DWG STATUS ST: R	REV: 002	PDI:	PAGE NUMBER: 15 OF 21

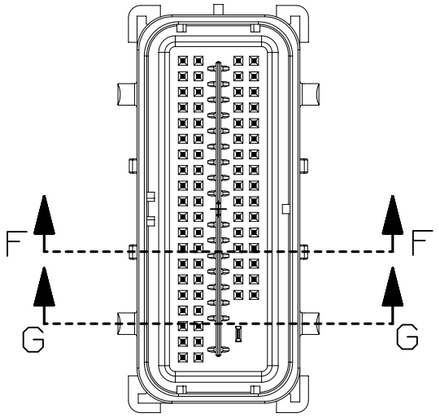

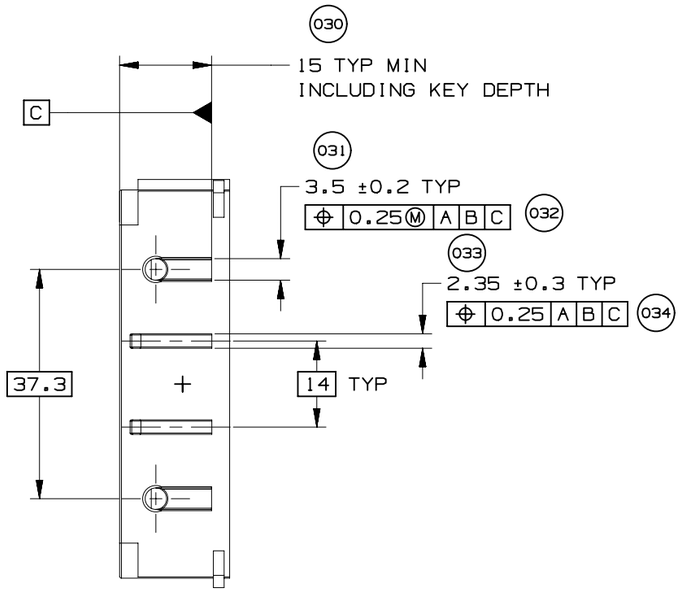

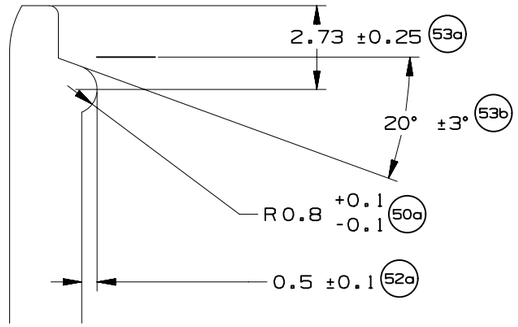

VIEW YY
SCALE 5:1

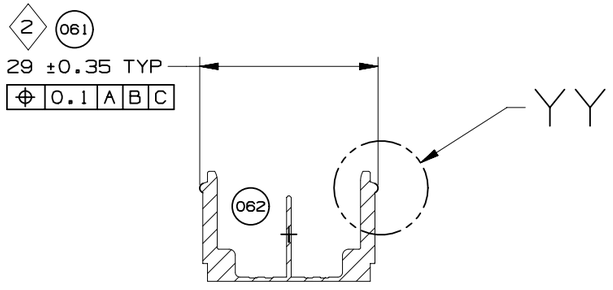

SECTION F-F

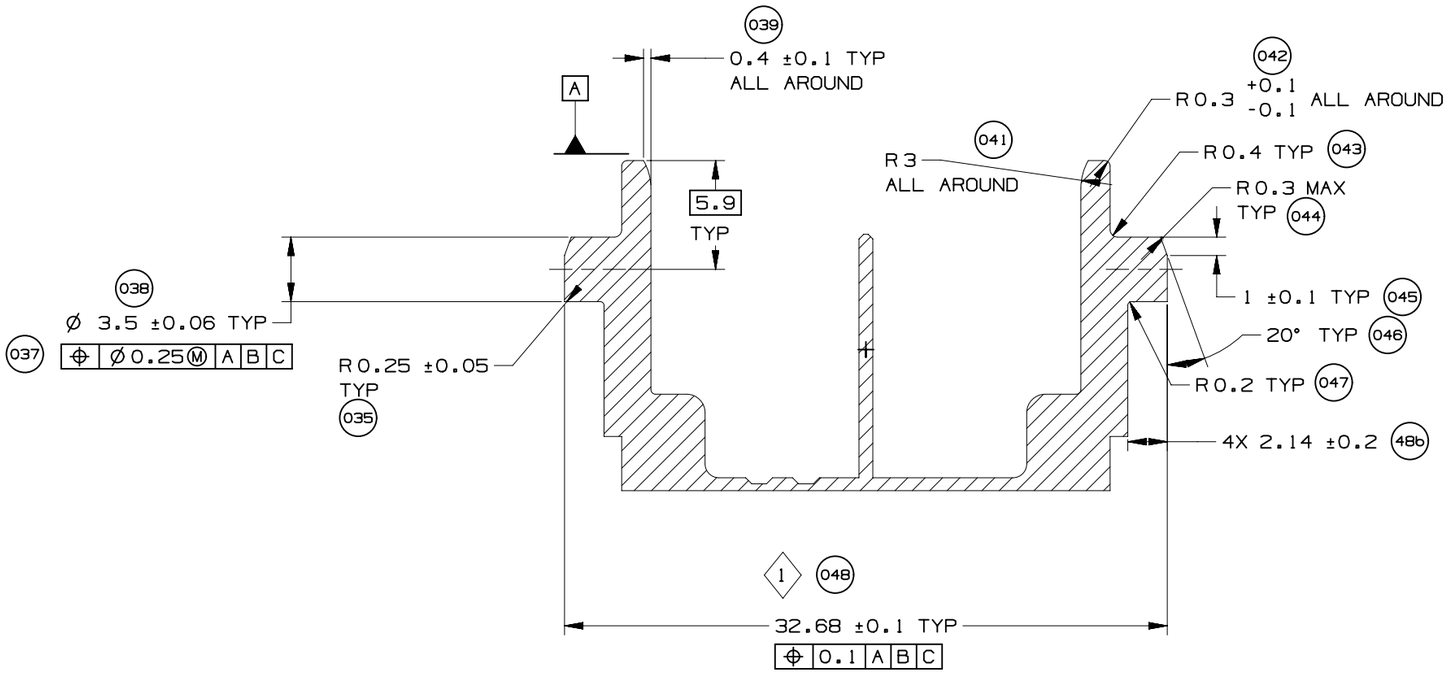

SECTION G-G
(CAM POST)

	GM	PAGE TITLE COMPONENT CONNECTOR INTERFACE		DRAWING NUMBER 12642695	DWG STATUS ST: R / REV: 002 / PDI:	PAGE NUMBER 16 OF 21	

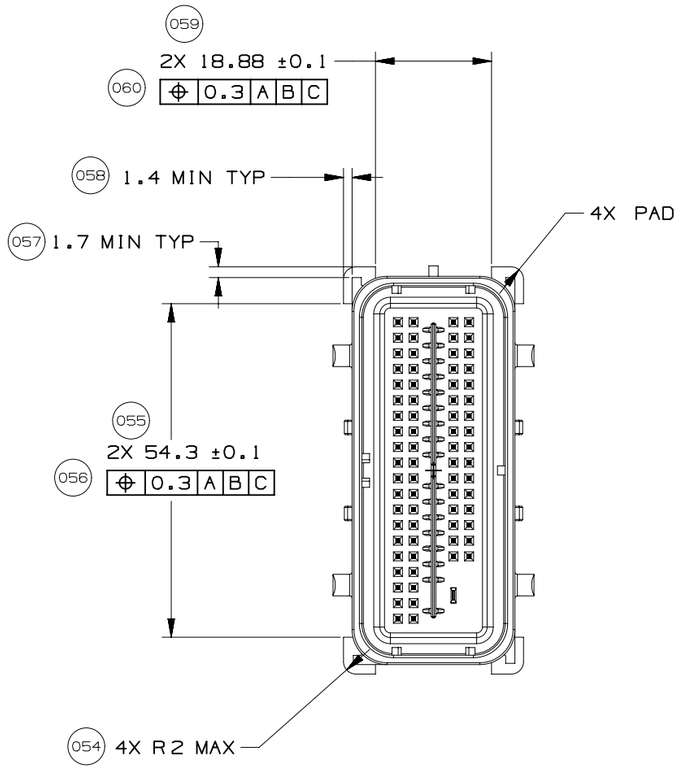

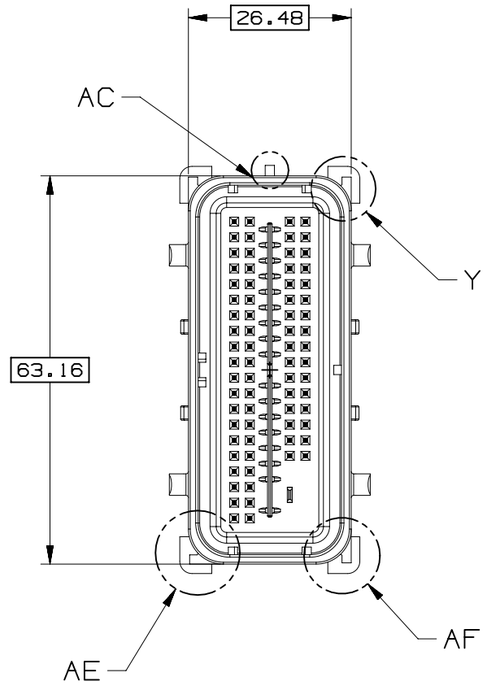

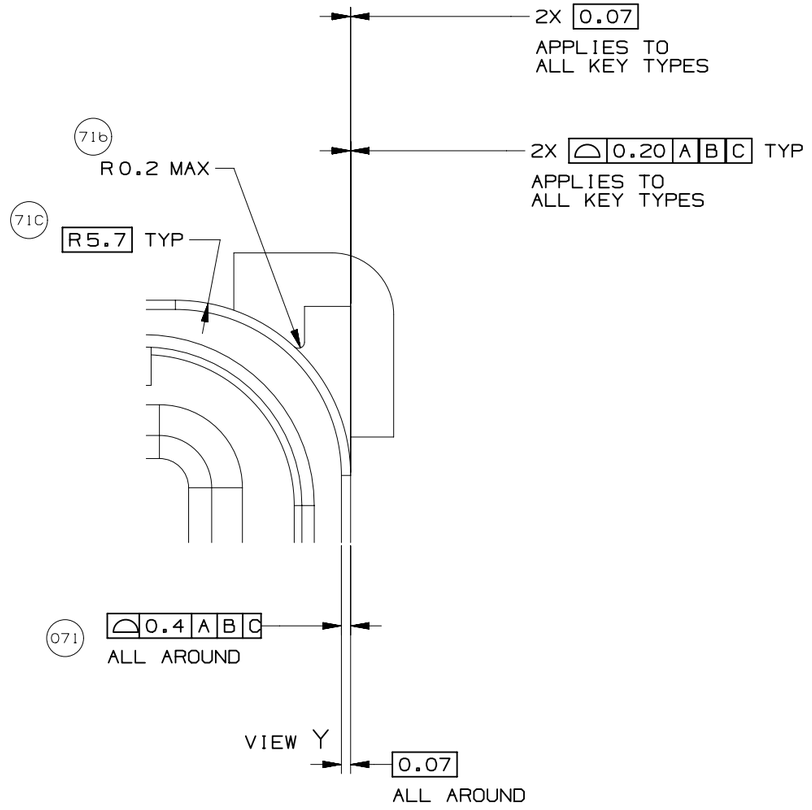

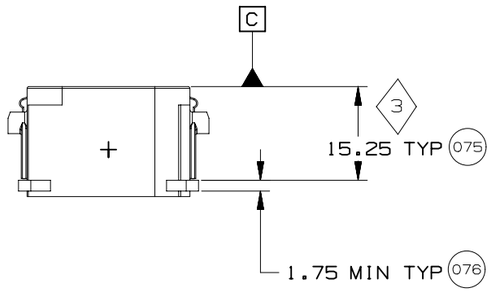

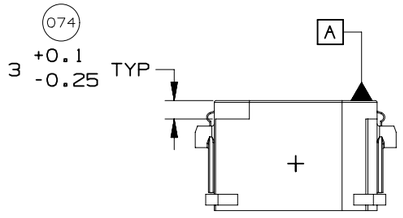

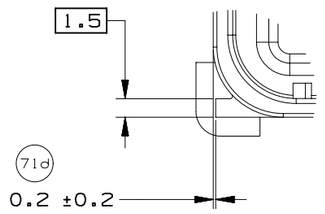

VIEW AE
KEY TYPE 2
SCALE 2:1

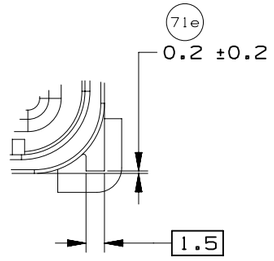

VIEW AF
KEY TYPE 1
SCALE 2:1

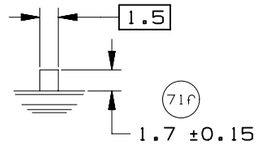

VIEW AC
KEY TYPE 3
SCALE 2:1

	GM	PAGE TITLE COMPONENT CONNECTOR INTERFACE		DRAWING NUMBER 12642695	DWG STATUS ST: R / REV: 002 / PDI:	PAGE NUMBER 17 OF 21

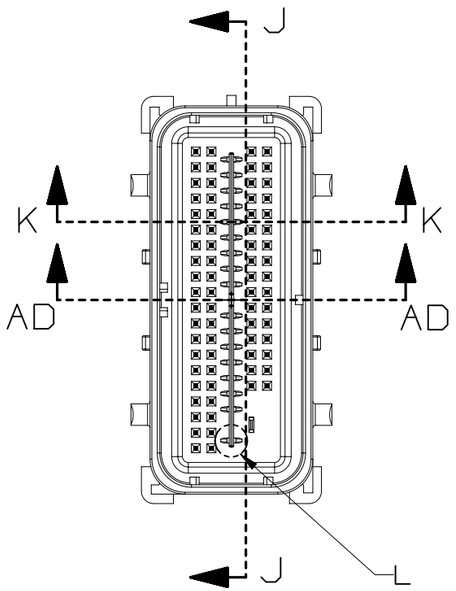

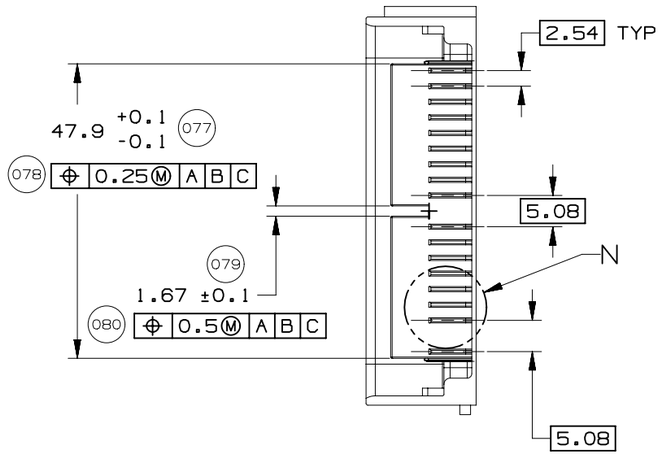

SECTION J-J

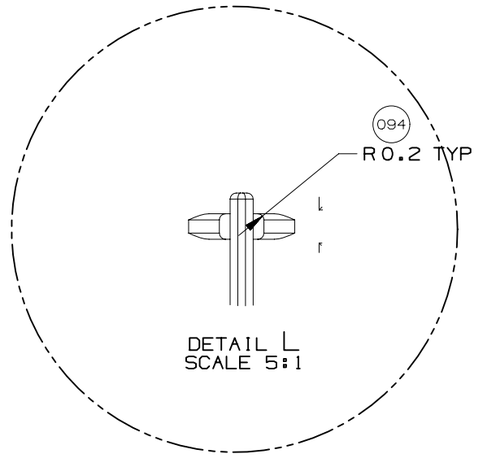

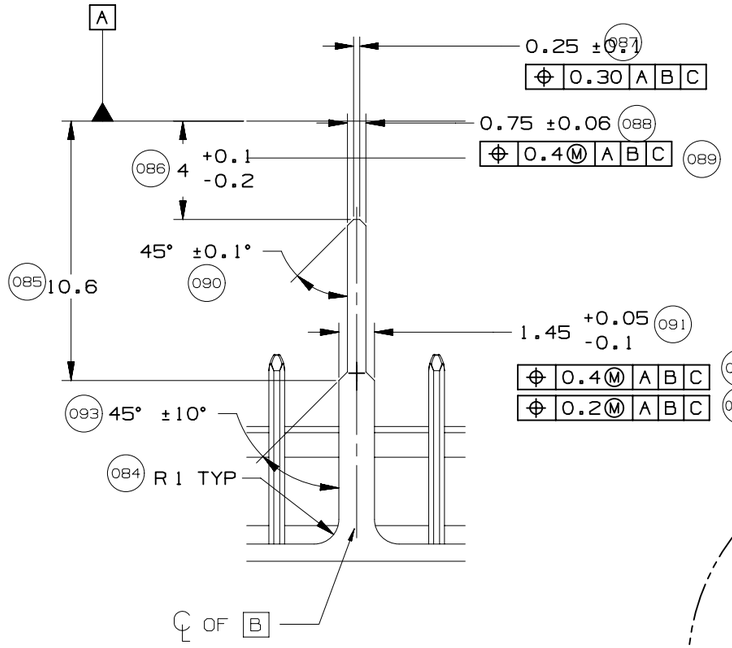

DETAIL M
TYPICAL
SCALE 4:1

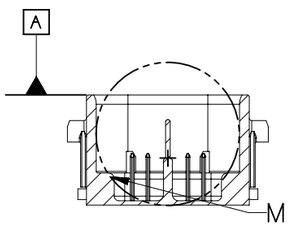

SECTION K-K

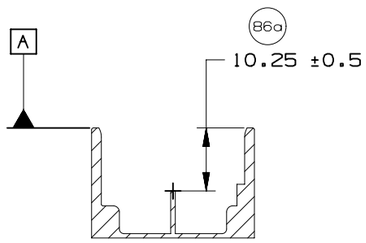

SECTION AD-AD

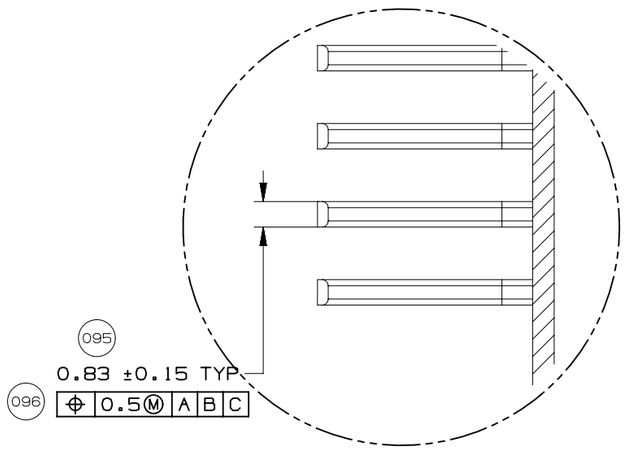

DETAIL N
SCALE 5:1

	GM	PAGE TITLE: COMPONENT CONNECTOR INTERFACE		DRAWING NUMBER: 12642695	DWG STATUS: ST R / REV 002 / PDI	PAGE NUMBER: 18 OF 21

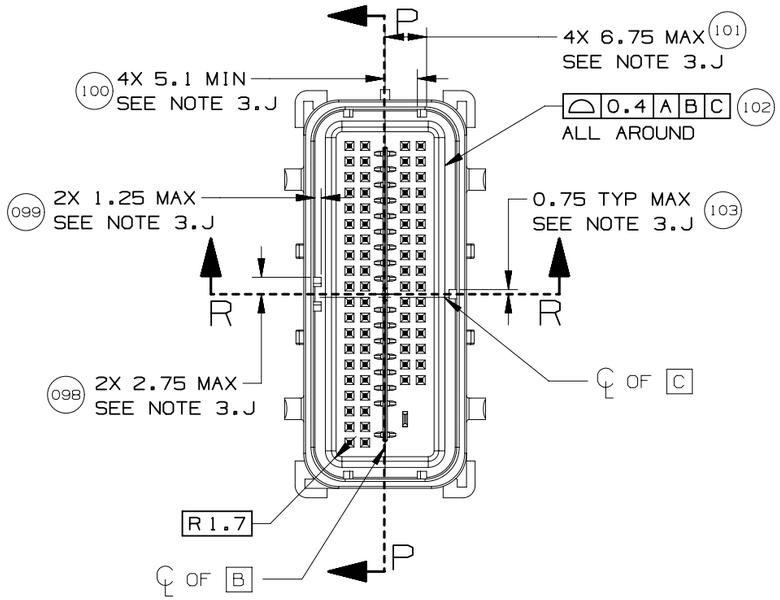

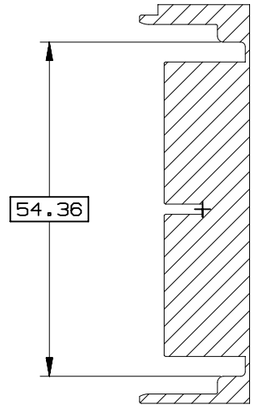

SECTION P-P

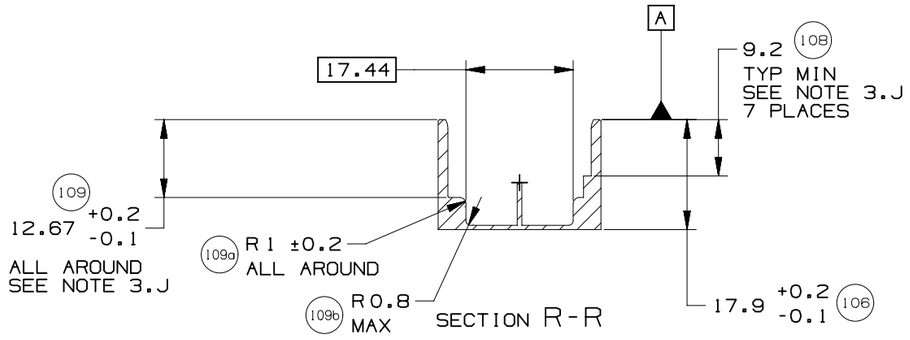

SECTION R-R

	GM	PAGE TITLE COMPONENT CONNECTOR INTERFACE		DRAWING NUMBER 12642695	DWG STATUS ST: R REV: 002 PDI:		PAGE NUMBER 19 OF 21

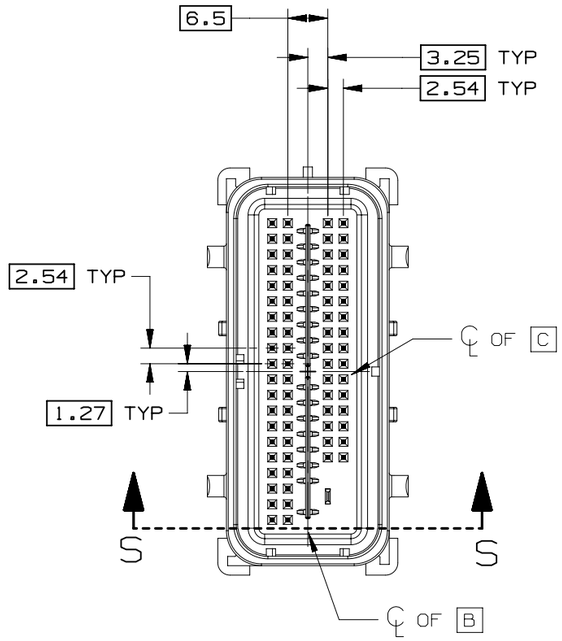

SECTION S-S

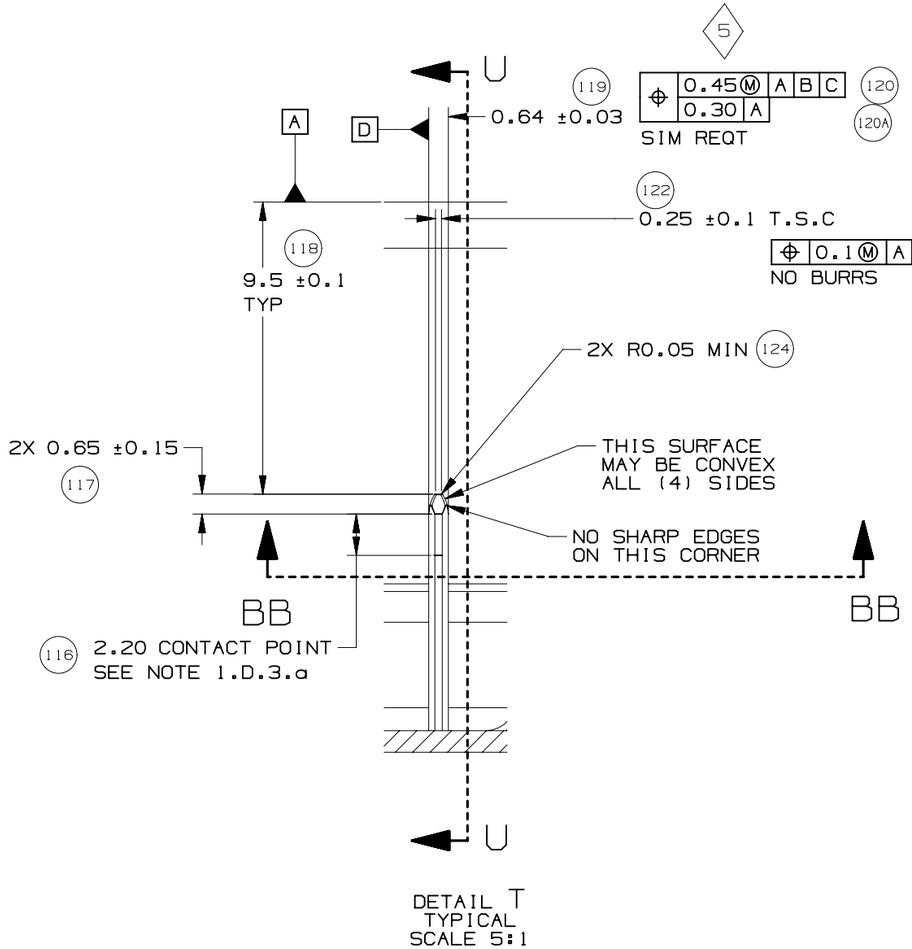

DETAIL T
TYPICAL
SCALE 5:1

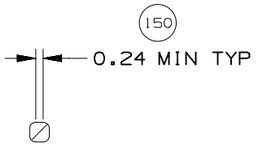

SECTION BB-BB

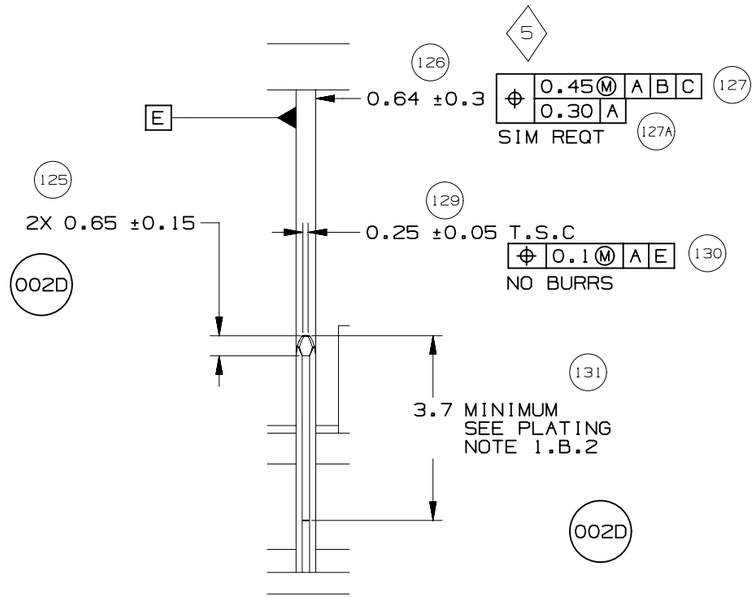

SECTION U-U

GM	PAGE TITLE: COMPONENT CONNECTOR INTERFACE		DRAWING NUMBER: 12642695	DWG STATUS ST: R	REV: 002	PDI:	PAGE NUMBER: 20 OF 21

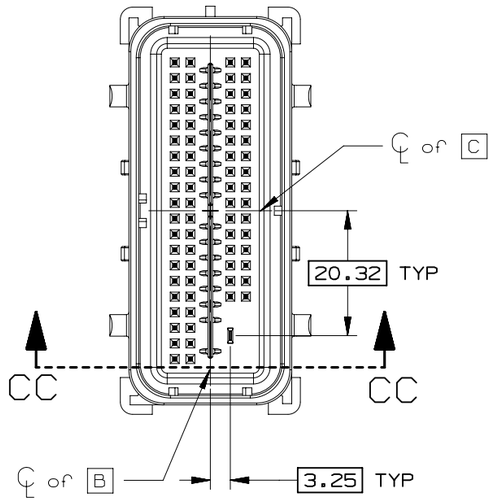

SECTION CC-CC

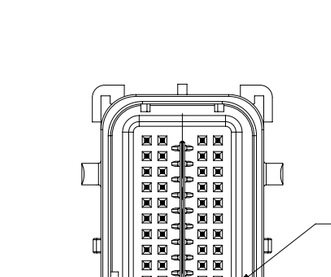

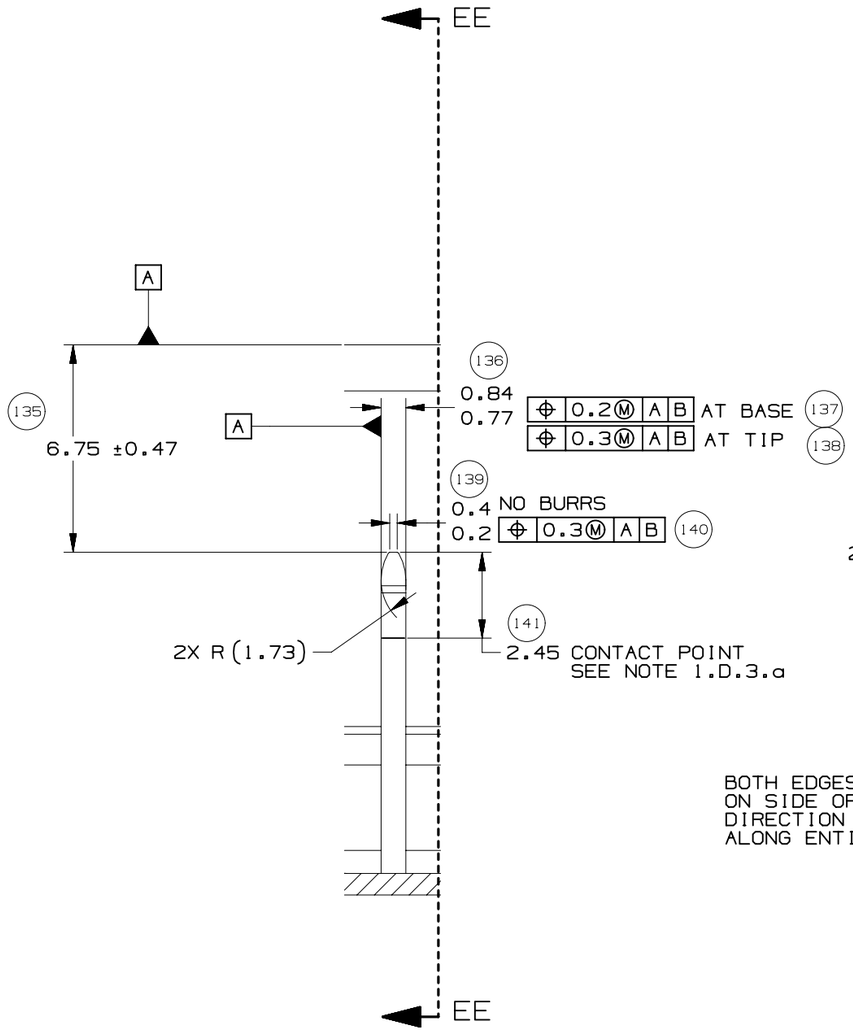

DETAIL DD
TYPICAL
SCALE 5:1

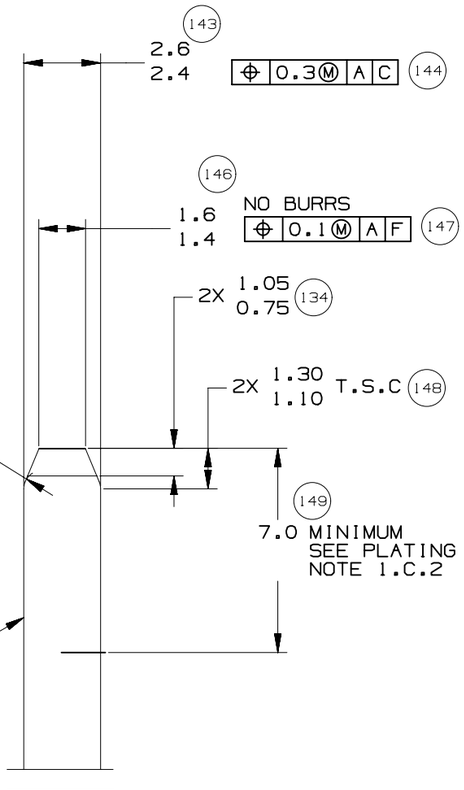

SECTION EE-EE
TYPICAL

	GM	PAGE TITLE: COMPONENT CONNECTOR INTERFACE		DRAWING NUMBER: 12642695	DWG STATUS: ST R / REV 002 / PDI		PAGE NUMBER: 21 OF 21

INDEX	
PAGE TITLE	PAGE
TITLE BLOCK	1
REVISION BLOCK	2
PART BLOCK	3
KPC BLOCK	4
COMPONENT TABLE	5
NOTES	6
NOTES	7
WIRE DRESS PACKAGING DIMENSIONS	8
LOCATION AND PACKAGING DIMENSIONS REFERENCING INTERFACE DATUMS B & C	9
LOCATION AND PACKAGING DIMENSIONS REFERENCING INTERFACE DATUM A	10
KEY ID REF - WIRE DRESS OPTION 0	11
KEY ID REF - WIRE DRESS OPTION 9	12
CIRCUIT CONFIGURATIONS	13
CIRCUIT CONFIGURATIONS	14
COMPONENT CONNECTOR INTERFACE	15
COMPONENT CONNECTOR INTERFACE	16
COMPONENT CONNECTOR INTERFACE	17
COMPONENT CONNECTOR INTERFACE	18
COMPONENT CONNECTOR INTERFACE	19
COMPONENT CONNECTOR INTERFACE	20
COMPONENT CONNECTOR INTERFACE	21
ADDITIONAL COMPONENTS REQUIRED	22

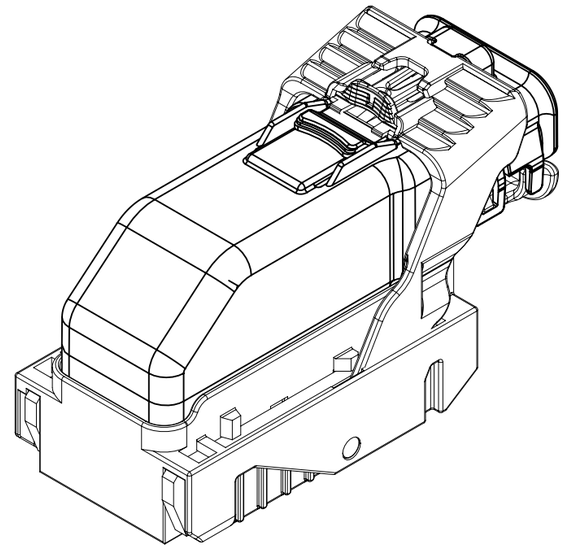

ISO VIEW

GM

UNLESS OTHERWISE SPECIFIED: THIS DOCUMENT IS IN ACCORDANCE WITH ASME Y14.5M-1994 AS AMMENDED BY THE GM GLOBAL DIMENSIONING AND TOLERANCING ADDENDUM-1997. ALL GEOMETRIC TOLERANCES AND RELATED DATUMS APPLY RFS. RULE #1 (PERFECT FORM AT MMC) DOES NOT APPLY WHEN A RELATIONSHIP BETWEEN FEATURES IS ESTABLISHED BY ORIENTATION OR LOCATION TOLERANCES. SEPARATE POSITION CALLOUTS MAY BE GAGED SEPARATELY REGARDLESS OF DATUM REFERENCES.

CHANGE RESTRICTED
NO MANUAL CHANGES

DO NOT SCALE

METRIC

DIMENSIONS SHOWN IN MILLIMETERS UNLESS OTHERWISE SPECIFIED

REFERENCE
12H (MOLEX AUTOMOTIVE)

	DATE
DRAFTER	05JN15
APVD1	
APVD2	
APVD3	
APVD4	
APVD5	

DRAWING NAME
HARNESS CONN ASM-SEALED 52/66/73/80 CKTS,MX123

DRAWING NUMBER
12672833

DWG STATUS		
ST	REV	PDI
R	001	

PAGE NUMBER
1 OF 22

PAGE	DWG STATUS					REVISION HISTORY	AUTH	DR	CK	ENG
	DATE	ST	REV	CHG	PDI					
	05JN15	R	001			RELEASED TO PRODUCTION AT DLS A	CRMRJE	DFK		

PAGE	DWG STATUS					REVISION HISTORY	AUTH	DR	CK	ENG
	DATE	ST	REV	CHG	PDI					

	GM	PAGE TITLE REVISION BLOCK		DRAWING NUMBER 12672833	DWG STATUS ST: R REV: 001 PDI:
					PAGE NUMBER 2 OF 22

HIERARCHY /QUANTITY	DWG ITM	DWG RLTN SHIP	PART NUMBER	P-A ITM	D L S	ST	REV	P D I	N M C I	MASS (KG)	PART NAME	NOTES
	28	RD	12674821		A	C	001			0.000	YAZAKI: 7158-3114-90	2.8MM CAVITY PLUG
	27	RD	12674820		A		001			0.000	PLUG-WRG HARN CONN MX0.64	
	26	RD	12672851		A		001			0.000	TERM-AG 0.5MM/0.75MM ISO,MX64	
	25	RD	12672850		A		001			0.000	TERM-AG 0.35MM ISO,MX64	
	24	RD	12582676		A	C	003			0.011	WIRE HARNESS COVER	52/66/73/80 WAY
	23	RD	12672869		A	2	001			0.050	HARN CONN ASM 80 CKT	KEY J OPTION 9
	22	RD	12672871		A	2	001			0.050	HARN CONN ASM 80 CKT	KEY H OPTION 9
	21	RD	12672873		A	2	001			0.050	HARN CONN ASM 80 CKT	KEY G OPTION 9
	20	RD	12672868		A	2	001			0.050	HARN CONN ASM 80 CKT	KEY J OPTION 0
	19	RD	12672870		A	2	001			0.050	HARN CONN ASM 80 CKT	KEY H OPTION 0
	18	RD	12672872		A	2	001			0.050	HARN CONN ASM 80 CKT	KEY G OPTION 0
	17	RD	12672867		A	2	001			0.050	HARN CONN ASM 73 CKT	KEY F OPTION 9
	16	RD	12672865		A	2	001			0.050	HARN CONN ASM 73 CKT	KEY C OPTION 9
	15	RD	12672863		A	2	001			0.050	HARN CONN ASM 73 CKT	KEY B OPTION 9
	14	RD	12672861		A	2	001			0.050	HARN CONN ASM 73 CKT	KEY A OPTION 9
	13	RD	12672866		A	2	001			0.050	HARN CONN ASM 73 CKT	KEY F OPTION 0
	12	RD	12672864		A	2	001			0.050	HARN CONN ASM 73 CKT	KEY C OPTION 0
	11	RD	12672862		A	2	001			0.050	HARN CONN ASM 73 CKT	KEY B OPTION 0
	10	RD	12672860		A	2	001			0.050	HARN CONN ASM 73 CKT	KEY A OPTION 0
	09	RD	12672859		A	2	001			0.050	HARN CONN ASM 66 CKT	KEY C OPTION 9
	08	RD	12672857		A	2	001			0.050	HARN CONN ASM 66 CKT	KEY A OPTION 9
	07	RD	12672858		A	2	001			0.050	HARN CONN ASM 66 CKT	KEY C OPTION 0
	06	RD	12672856		A	2	001			0.050	HARN CONN ASM 66 CKT	KEY A OPTION 0
	05	RD	12672855		A	2	001			0.054	HARN CONN ASM 52 CKT	KEY C OPTION 9
	04	RD	12672853		A	2	001			0.050	HARN CONN ASM 52 CKT	KEY A OPTION 9
	03	RD	12672854		A	2	001			0.054	HARN CONN ASM 52 CKT	KEY C OPTION 0
	02	RD	12672852		A	2	001			0.050	HARN CONN ASM 52 CKT	KEY A OPTION 0
	01	RD	12672833		A		001			8.751	HARNESS CONN ASM-SEALED 52/66/73/80 CKTS,MX	
											DRAWING	

PARTS SHOWN ON DRAWING

GM

PAGE TITLE
PART BLOCK

DRAWING NUMBER
12672833

DWG STATUS		
ST	REV	PDI
R	001	

KEY PRODUCT CHARACTERISTICS
(IN ACCORDANCE WITH QN 1805 OR QN 1050)

▽ SAFETY/COMPLIANCE

◇ FIT/FUNCTION

TOTAL ON DRAWING	4
LAST NO. USED	4

NO	TYPE	DESCRIPTION	RATIONALE	PAGE/ZONE
1	F/F	32.68	IMPROVE CONNECTOR SYSTEM MATING	16
2	F/F	29.00	INSURE PROPER RELEASE OF LEVER	16
3	F/F	15.25	INSURE FINAL MATE POSITION	17
4	F/F	POSITIONAL TOLERANCE (2 PLACES)	INSURE CONNECTOR SYSTEM MATEABILITY	20

					APPLICABLE COMPONENTS					
LINE	MFG.	MFG. P/N	GM P/N	EFFECTIVE DATE	DESCRIPTION	KEY OPTION	WIRE DRESS OPTION	KEY CONFIG.	COLOR	STATUS
-										
1	MOLEX	34565-0003	12582676	02JN03	MX123 DRESS COVER 52/66/73/80 CKT	N/A	N/A	N/A	BLACK	AVAILABLE
2	MOLEX	160094-0001	12672852	01SP13	MX123 HRNS CONN ASSY 52 CKT	A	0	1458	BLACK	AVAILABLE
3	MOLEX	160094-0003	12672854	01SP13	MX123 HRNS CONN ASSY 52 CKT	C	0	2467	BLUE	AVAILABLE
4	MOLEX	160094-0013	12672853	01SP13	MX123 HRNS CONN ASSY 52 CKT	A	9	1458	BLACK	AVAILABLE
5	MOLEX	160094-0015	12672855	01SP13	MX123 HRNS CONN ASSY 52 CKT	C	9	2467	BLUE	AVAILABLE
6	MOLEX	34822-0013	12672856	01SP13	MX123 HRNS CONN ASSY 66 CKT	A	0	1458	BLACK	AVAILABLE
7	MOLEX	34822-0033	12672858	01SP13	MX123 HRNS CONN ASSY 66 CKT	C	0	2467	BLUE	AVAILABLE
8	MOLEX	34822-0023	12672857	01SP13	MX123 HRNS CONN ASSY 66 CKT	A	9	1458	BLACK	AVAILABLE
9	MOLEX	34822-0043	12672859	01SP13	MX123 HRNS CONN ASSY 66 CKT	C	9	2467	BLUE	AVAILABLE
10	MOLEX	34566-0103	12672860	11JN04	MX123 HRNS CONN ASSY 73 CKT	A	0	1458	BLACK	AVAILABLE
11	MOLEX	34566-0203	12672862	11JN04	MX123 HRNS CONN ASSY 73 CKT	B	0	1468	ST GRAY	AVAILABLE
12	MOLEX	34566-0303	12672864	09AP08	MX123 HRNS CONN ASSY 73 CKT	C	0	2467	BLUE	AVAILABLE
13	MOLEX	34566-0603	12672866	05DC14	MX123 HRNS CONN ASSY 73 CKT	F	0	1357	NATURAL	AVAILABLE
14	MOLEX	34566-1303	12672861	11JN04	MX123 HRNS CONN ASSY 73 CKT	A	9	1458	BLACK	AVAILABLE
15	MOLEX	34566-1403	12672863	11JN04	MX123 HRNS CONN ASSY 73 CKT	B	9	1468	ST GRAY	AVAILABLE
16	MOLEX	34566-1503	12672865	09AP08	MX123 HRNS CONN ASSY 73 CKT	C	9	2467	BLUE	AVAILABLE
17	MOLEX	34566-1803	12672867	05DC14	MX123 HRNS CONN ASSY 73 CKT	F	9	1357	NATURAL	AVAILABLE
18	MOLEX	34566-0703	12672872	09AP08	MX123 HRNS CONN ASSY 80 CKT	G	0	1358	BLUE	AVAILABLE
19	MOLEX	34566-0803	12672870	11JN04	MX123 HRNS CONN ASSY 80 CKT	H	0	2458	ST GRAY	AVAILABLE
20	MOLEX	34566-0903	12672868	T.B.D	MX123 HRNS CONN ASSY 80 CKT	J	0	2457	BLACK	NOT ACTIVE
21	MOLEX	34566-1903	12672873	09AP08	MX123 HRNS CONN ASSY 80 CKT	G	9	1358	BLUE	AVAILABLE
22	MOLEX	34566-2003	12672871	11JN04	MX123 HRNS CONN ASSY 80 CKT	H	9	2458	ST GRAY	AVAILABLE
23	MOLEX	34566-2103	12672869	T.B.D	MX123 HRNS CONN ASSY 80 CKT	J	9	2457	BLACK	NOT ACTIVE
24	MOLEX	34736-0028	12672851	01AU10	MX64 RCPT TERM Ag 0.5mm/0.75mm ISO GAGE B (RIGHT PAYOFF)	N/A	N/A	N/A	N/A	AVAILABLE
25	MOLEX	34736-0026	12672850	01AU10	MX64 RCPT TERM Ag 0.35mm ISO GAGE B (RIGHT PAYOFF)	N/A	N/A	N/A	N/A	AVAILABLE
26	MOLEX	34586-0001	12674820	11JN04	MX123 0.64mm GROMMET PLUG	N/A	N/A	N/A	NATURAL	AVAILABLE
27	YAZAKI	7116-4150-02	12588066	02JN03	2.8mm YESC SEALED FEMALE TERMINAL TIN 0.35mm2-0.50mm2	N/A	N/A	N/A	N/A	NOT ACTIVE
28	YAZAKI	7116-4151-02	12588067	02JN03	2.8mm YESC SEALED FEMALE TERMINAL TIN 0.75mm2-1.0mm2	N/A	N/A	N/A	N/A	NOT ACTIVE
29	YAZAKI	7116-4152-02	12582685	02JN03	2.8mm YESC SEALED FEMALE TERMINAL TIN 1.5mm2-2.5mm2	N/A	N/A	N/A	N/A	AVAILABLE
30	YAZAKI	7158-3111-60	12588068	02JN03	2.8mm CABLE SEAL (wire O.D. range 1.2mm-1.9mm)	N/A	N/A	N/A	GREEN	NOT ACTIVE
31	YAZAKI	7158-3112-70	12588069	02JN03	2.8mm CABLE SEAL (wire O.D. range 1.8mm-2.3mm)	N/A	N/A	N/A	YELLOW	NOT ACTIVE
32	YAZAKI	7158-3113-40	12582686	02JN03	2.8mm CABLE SEAL (wire O.D. range 2.1mm-3.0mm)	N/A	N/A	N/A	WHITE	AVAILABLE
33	YAZAKI	7158-3114-90	12674821	02JN03	2.8mm YESC CAVITY PLUG	N/A	N/A	N/A	BLUE	AVAILABLE
34	MOLEX	63825-8400	N/A	02JN03	MX64 TERM HAND CRIMP TOOL	N/A	N/A	N/A	N/A	AVAILABLE
35	MOLEX	63813-1400	XX019826	02JN03	MX64 TERM SERVICE TOOL	N/A	N/A	N/A	N/A	AVAILABLE
36	MOLEX	63902-5300	N/A	02JN03	MX64 CRIMP APPLICATOR with TOOL KIT 0.5/0.75mm2 PAYOFF DIRECTION D (left payoff) (contact Molex for payoff detail)	N/A	N/A	N/A	N/A	AVAILABLE
37	MOLEX	63902-5370	N/A	02JN03	MX64 APPLICATOR TOOL KIT 0.5/0.75mm2	N/A	N/A	N/A	N/A	AVAILABLE
38	MOLEX	63902-5100	N/A	02JN03	MX64 CRIMP APPLICATOR with TOOL KIT 0.35mm2 PAYOFF DIRECTION D (left payoff) (contact Molex for payoff detail)	N/A	N/A	N/A	N/A	AVAILABLE
39	MOLEX	63902-5170	N/A	02JN03	MX64 APPLICATOR TOOL KIT 0.35mm2	N/A	N/A	N/A	N/A	AVAILABLE
40	SPX	J35616-64	T.B.D.	02JN03	0.64mm PROBE TOOL (for rcpt)	N/A	N/A	N/A	N/A	AVAILABLE
41	SPX	J35616-64A	T.B.D.	02JN03	0.64mm PROBE TOOL WITH EXT (for rcpt)	N/A	N/A	N/A	N/A	AVAILABLE
42	SPX	J35616-65	T.B.D.	02JN03	0.64mm PROBE TOOL WITH EXT (for pin)	N/A	N/A	N/A	N/A	AVAILABLE
43	SPX	J35616-4A	T.B.D.	02JN03	2.8mm PROBE TOOL (for rcpt)	N/A	N/A	N/A	N/A	AVAILABLE
44	YAZAKI	X39899-J374	12094430	02JN03	2.8mm TERM SERVICE TOOL	N/A	N/A	N/A	N/A	AVAILABLE
45	TQI	7000-1006	N/A	15JN15	52 CKT PASS THROUGH ADAPTERS	N/A	N/A	N/A	BLACK	AVAILABLE
46	TQI	7000-1002	N/A	15JN15	66 CKT PASS THROUGH ADAPTERS	N/A	N/A	N/A	BLACK	AVAILABLE
47	TQI	79917-0061	N/A	15JN15	73 CKT PASS THROUGH ADAPTERS	N/A	N/A	N/A	BLACK	AVAILABLE
48	TQI	79917-0066	N/A	15JN15	80 CKT PASS THROUGH ADAPTERS	N/A	N/A	N/A	BLACK	AVAILABLE

* - MX123 DRESS COVER 52/66/73/80 CKT MATES TO ANY MX123 HARN CONN ASSY SHOWN ON TABLE ABOVE

NOTES: UNLESS OTHERWISE SPECIFIED

1. MATERIAL FOR INTERFACE:

A. RESIN:
   1. 30% G.F. PBT; 20% MAX. (BY WEIGHT) REGRIND.
   2. MATING CONNECTOR INTERFACE PART COLOR MUST BE SAME AS MATCHING KEYED HARNESS CONNECTOR ASSEMBLY.
   3. MUST BE VALIDATED FOR INDIVIDUAL DEVICE APPLICATION REQUIREMENTS.

B. 0.64MM PINS:
   1. BASE MATERIAL: COPPER ALLOY; CONDUCTIVITY >= 28% IACS AT 20°C; TENSILE STRENGTH >= 635 N/mm²;SURFACE ROUGHNESS R_a 6 MAX.
   2. PLATING FINISH: SILVER (Ag). PLATING TO BE 1.9-3.3 um ELECTRODEPOSITED SEMI-BRIGHT SILVER OVER 1.25-2.25 um DUCTILE SULPHAMATE NICKEL PER NOTE 1(D).
   3. ANTI-TARNISH: SYNTHETIC HYDROCARBON CONTACT SURFACE FINISH OR EQUIVALENT APPLIED WITHOUT VOID TO CONTACT AREA (MIN 3.7mm FROM PIN TIP).

C. 2.8MM BLADE:
   1. BASE MATERIAL: COPPER ALLOY; CONDUCTIVITY>= 28% IACS AT 20°C; TENSILE STRENGTH >= 350 N/mm²; SURFACE ROUGHNESS R_a 6 MAX.
   2. PLATING FINISH: TIN. PLATING TO BE 2.5-5.0 um ELECTRODEPOSITED TIN, MATTE FINISH OVER 1.25-2.5um DUCTILE SULPHAMATE NICKEL PER NOTE 1(D).

D. PLATING REQUIREMENTS:

1. SILVER PLATING
   a. 99.5% PURE SEMI-BRIGHT WITH NO ORGANIC BRIGHTNERS OR CHROMATES.

2. NICKEL PLATING
   a. ELECTRODEPOSITED DUCTILE SULFAMATE NICKEL WITH A NON-BRIGHTENED FINISH. NO ORGANIC OR BRIGHTENING AGENTS SHALL BE ALLOWED.
   b. SHALL ONLY BE USED AS AN UNDERLYING PLATING AND MAY NOT BE USED AS AN ELECTRICAL CONTACT SURFACE PLATING.
   c. SHALL BE NODULE FREE WHEN VIEWED AT 10X MAGNIFICATION IN MEASURED IN CONTACT SURFACE AREA PLUS 0.5MM PERIMETER AROUND THE CONTACT SURFACE AREA.
   d. ALL PLATINGS SHALL HAVE A 1.0% MAXIMUM BY WEIGHT IMPURITIES. IMPURITIES ARE DEFINED AS ALL ELEMENTS NOT THE PRIMARY PLATING OR HARDENING AGENT IF APPLICABLE, AS DETERMINED BY WET CHEMICAL ANALYSIS OR AUGER METHOD. NO SINGLE IMPURITY SHALL EXCEED 0.1% MAXIMUM BY WEIGHT.

3. TESTING
   a. THICKNESS TO BE MEASURED IN CONTACT SURFACE AREA PLUS 0.5MM PERIMETER AROUND THE CONTACT SURFACE AREA AS DESIGNATED IN THE DRAWING. THICKNESS SHALL BE DETERMINED BY METHOD OF X-RAY (XRF).
   b. PLATING ADHESION SHALL BE TESTED BY A BEND TEST FOR ALL METALS. THE TEST SAMPLE SHALL BE BENT 90 DEGREES TO DETERMINE DEPOSIT ADHESION. TESTING SHALL BE COMPLETED IN ACCORDANCE WITH ASTM SPEC B571.

2. DESIGN - GENERAL:

A. THIS IS A 100% CAD GENERATED PART. THE CAD MATHEMATICAL DATA IS THE MASTER FOR THIS PART. FOR DIMENSIONAL OR ANY INFORMATION NOT SHOWN ON THIS DRAWING, ANALYZE THE CAD MODEL.
B. TOLERANCES:
   1. LINEAR 0.X ± 0.30
              0.XX ± 0.10
              0.XXX ± 0.10
   2. ANGULAR X° ± 3°
   3. ⌓ | 1.0 | A | B | C
C. MINIMUM WALL THICKNESS REQUIRED: 1.3mm.
D. CORNERS SHOWN AS SHARP TO BE R 0.2 MAX.
E. LETTERING SHALL BE 0.15 MAX RAISED IN 0.20 MAX RECESS PAD. THIS INCLUDES MATERIAL CODE, RECYCLING CODE, CAVITY ID AND DATE CODE.
F-1. PARTS MUST BE FREE OF DISCOLORATION, SALT RESIDUE AND OTHER IMPERFECTIONS THAT AFFECT FIT OR FUNCTION.
F-2. SCRATCHES OR DENTS NOT TO EXCEED 0.013mm IN DEPTH.
G. FOLLOWING PRODUCTION CODES TO BE PERMANENTLY MARKED & HUMAN READABLE TO A LETTER HEIGHT OF 1.5 ±0.5MM X 0.3 MAX DEEP
   1. MATERIAL #: XXXXX-XXXX
   2. DATE CODE: JJJY (JULIAN DAY, LAST DIGIT OF YEAR)
   3. INSPECTION MACHINE CODE + SERIAL #: X_XXXXX

3. DESIGN - MANUFACTURING:

A. DRAFT TO BE WITHIN TOLERANCE.
B. ALLOWABLE FLASH MAX 0.2 HIGH X MAX 0.13 THICK.
C. ALLOWABLE PARTING LINE MISMATCH 0.2 MAX.
D. EJECTOR PINS MARK TO BE FLUSH TO 0.25 MAX DEPRESSED.
E. ALLOWABLE GATE VESTIGE FLUSH TO 0.25 MAX PROTRUSION.
F. NO EXTERNAL MOLD RELEASE AGENT ALLOWED DURING MANUFACTURING.
G. STEEL THAT FORMS THE INDICATED SURFACE MUST BE POLISHED WITH A DIAMOND FINISH (SPI A-2) OVER THE FULL PERIPHERY OF THE TOOL. SURFACE MUST HAVE NO MISMATCH.
H. ANY PROCESS LUBRICANT REMAINING ON THE TERMINAL MUST NOT VARNISH OR DEGRADE IT'S ELECTRICAL PERFORMANCE UP TO A MAXIMUM CLASS AMBIENT TEMPERATURE PER SAE USCAR-2 FOR 1008 HOURS. PROCESS LUBRICANTS SHOULD BE APPROVED BY THE RESPONSIBLE ENGINEER.
J. OPTIONAL FEATURES PROVIDED FOR AUTOMATION.
K. PART MUST BE FREE FROM BURRS AND SHARP EDGES, WHICH MIGHT BE DETRIMENTAL TO SATISFACTORY ASSEMBLY, SAFE HANDLING OR FUNCTION OF PART.
L. PARTS AS DELIVERED TO ASSEMBLY SHALL BE CLEAN AND FREE OF DEBRIS, RESIDUAL ABRASIVE MATERIAL AND CORROSION PRODUCTS ADVERESLY AFFECTING FUNCTION OR APPEARENCE.
M. RESTRICTED AND REPORTABLE SUBSTANCES FOR PARTS PER GMW3059.

NOTES: UNLESS OTHERWISE SPECIFIED

4. SYSTEM REQUIREMENTS:

   A. HARNESS CONNECTOR IS COMPATIBLE WITH THE FOLLOWING ISO WIRE SIZE NO'S:
      0.35mm2, MEETING GMW15626 - MIN OD OF 1.30MM
      0.50mm2, MEETING GMW15626
      0.75mm2, MEETING GMW15626 - MAX OD OF 2.06MM

   B. CABLE TIE SPECIFICATIONS:
      1. CABLE TIE:
         TENSILE RATING: 220N / (50lbs) MIN
         TIE LENGTH: 186mm MIN
         TIE WIDTH: 4.75mm MAX
         MATERIAL: NYLON
      2. INSTALLATION:
         CABLE TIE TENSION: 190N MIN
      3. DRESSED WIRE BUNDLE PACKAGING: SEE FIG. 1

   C. WHEN MATED WITH COMPONENT CONNECTOR INTERFACE AND/OR DRESS COVER, HARNESS CONNECTOR SYSTEM CONFORMS TO THE FOLLOWING:
      1. SAE/USCAR-2, REV: 3 APRIL, 2001; CLASS 3
      2. FIELD CORRELATED LIFE TEST, SAE/USCAR-20, NOV. 2001
      3. GMW #3191 AUGUST 22, 2000 (DRAFT); TEMPERATURE CLASS 3, SEALING CLASS 1, VIBRATION CLASS 2
      4. RESTRICTED AND REPORTABLE CHEMICALS PER GMW #3059, REV: D AUGUST 2002
      5. TPA USER FORCES (FULLY POPULATED WITH TERMINALS)
         a. REMOVAL FROM LOCK TO PRE-SET: <=120N

   D. WIRE SPECIFICATIONS:
      1. WIRE SURFACE MUST BE FREE OF SCRATCHES, GROOVES OR DENTS WHERE FUNCTIONAL

5. TERMINAL CURRENT RATINGS:

   A. MX64 RCPT TERM
      ALL TESTING DONE IN ACCORDANCE WITH USCAR-2 REV5 SECTION 5.3

      1. MX64 RCPT TERM Ag 0.50/0.75mm2 CRIMPED TO 0.75mm2 ISO WIRE AND MATED TO MX123 0.64MM PIN: SEE TABLE BELOW
      2. MX64 RCPT TERM Ag 0.35mm2 CRIMPED TO 0.35mm2 ISO WIRE AND MATED TO MX123 0.64MM PIN: SEE TABLE BELOW

WIRE	CURRENT RATING			
	23'C	85'C	105'C	125'C
0.75mm2	11.3A	11.3A	9.5A	6.6A
0.50mm2	10.0A	10.0A	8.3A	5.7A
0.35mm2	8.5A	8.5A	7.1A	5.0A

   B. 2.8MM RCPT TERM
      ALL TESTING DONE IN ACCORDANCE WITH MOLEX DVP&R 0279 (TR # 7125)

      1. 2.8MM RCPT TERM TIN 2.0mm2 CRIMPED TO 2.0mm2 ISO WIRE AND MATED TO MX123 2.8MM BLADE: 25.6 AMPS AT 125° C

6. CONTACT MOLEX AUTOMOTIVE FOR AVAILABLE CUSTOM PATTERNS OF CAVITIES OPEN FOR CIRCUITS - SEE GM DRAWING 13507496

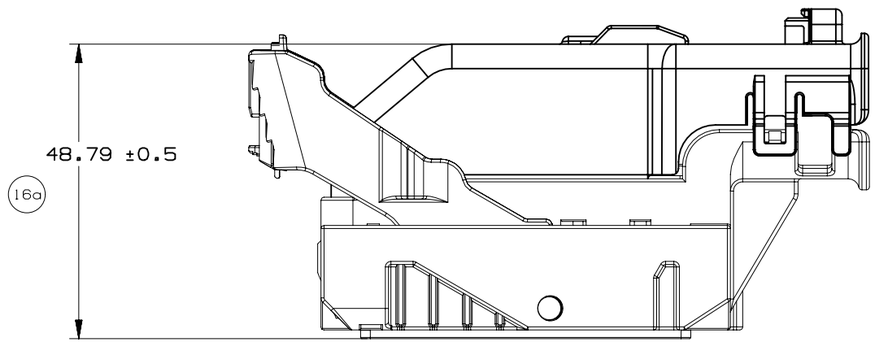

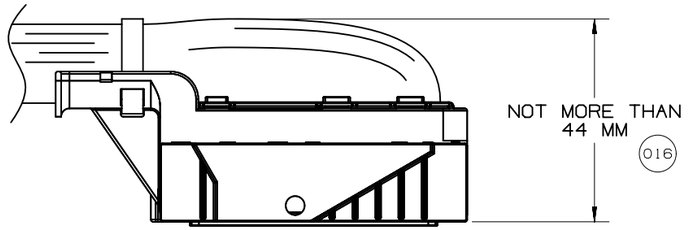

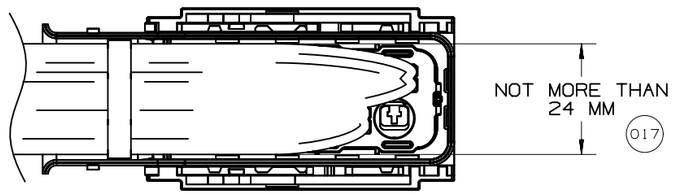

Fig. 1

	GM	PAGE TITLE WIRE DRESS PACKAGING DIMENSIONS		DRAWING NUMBER 12672833	DWG STATUS ST: R / REV: 001 / PDI:		PAGE NUMBER 8 OF 22

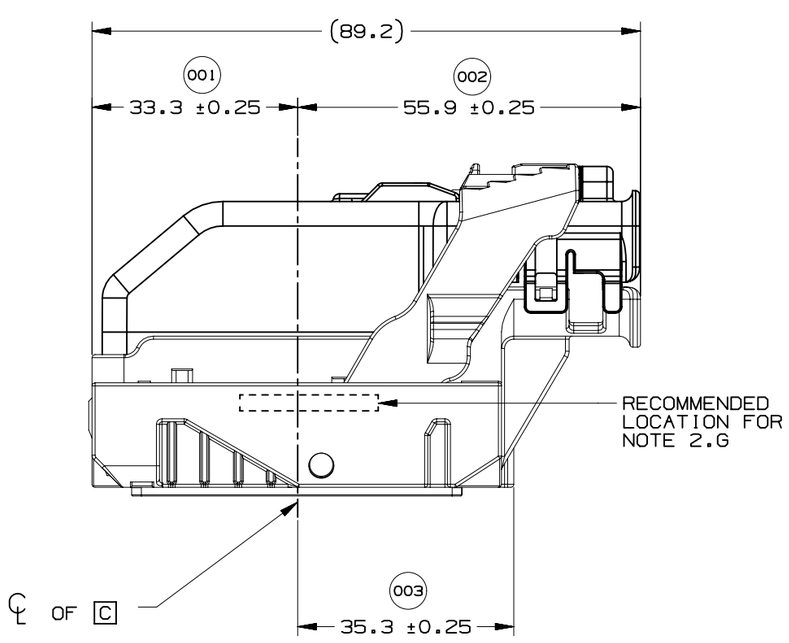

WIRE DRESS OPTION 0 SHOWN

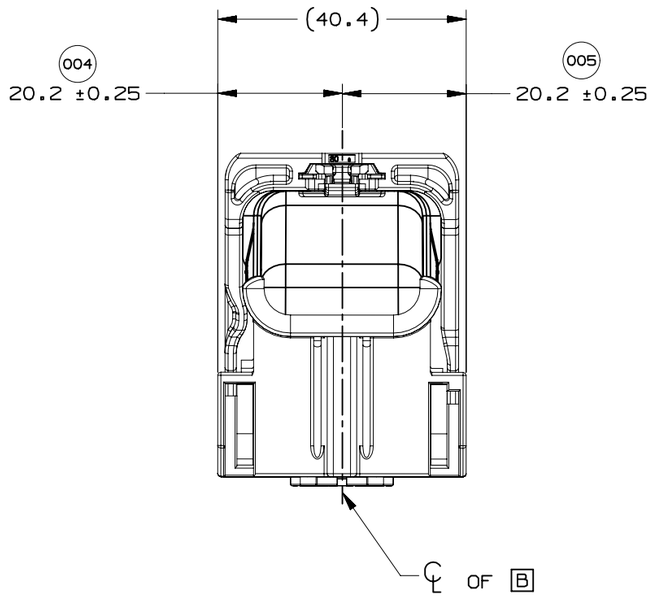

WIRE DRESS OPTION 0 SHOWN

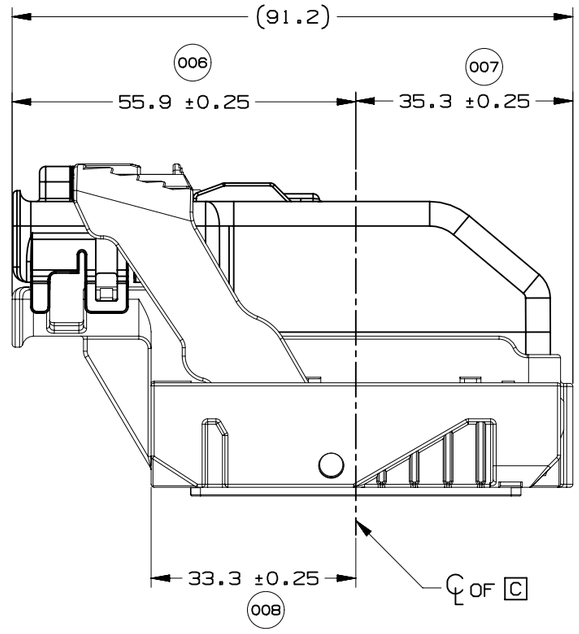

WIRE DRESS OPTION 9 SHOWN

	GM	PAGE TITLE LOCATION AND PACKAGING DIMENSIONS REFERENCING INTERFACE DATUMS B & C		DRAWING NUMBER 12672833	DWG STATUS ST: R / REV: 001 / PDI:		PAGE NUMBER 9 OF 22

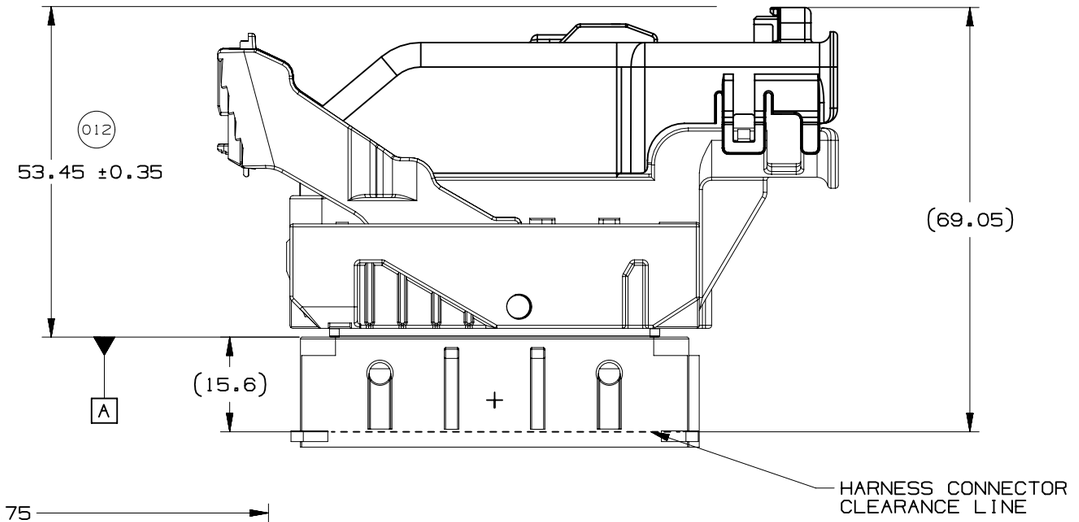

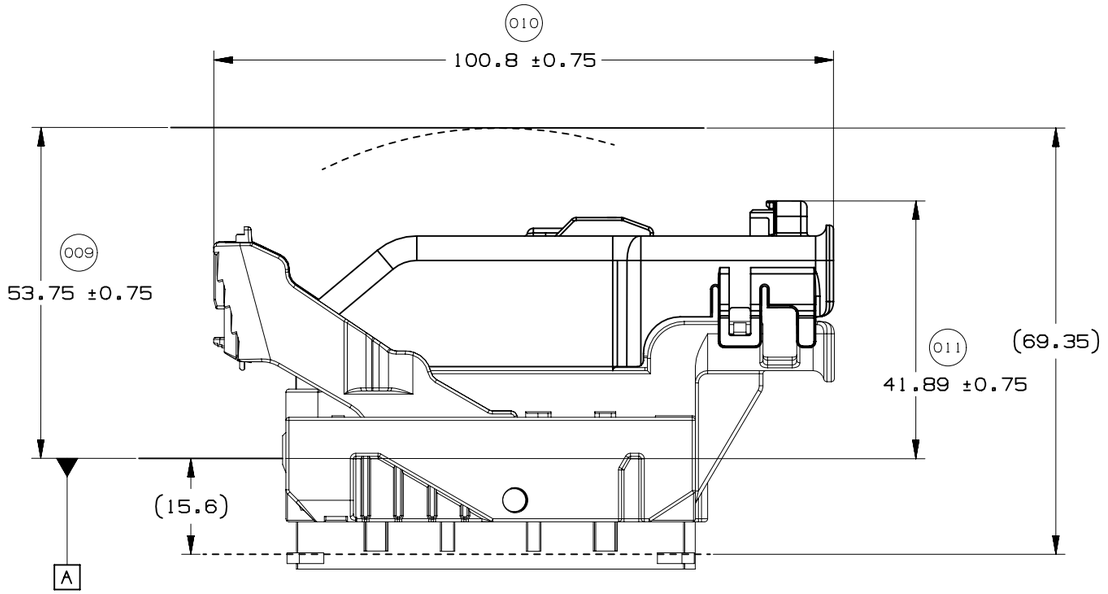

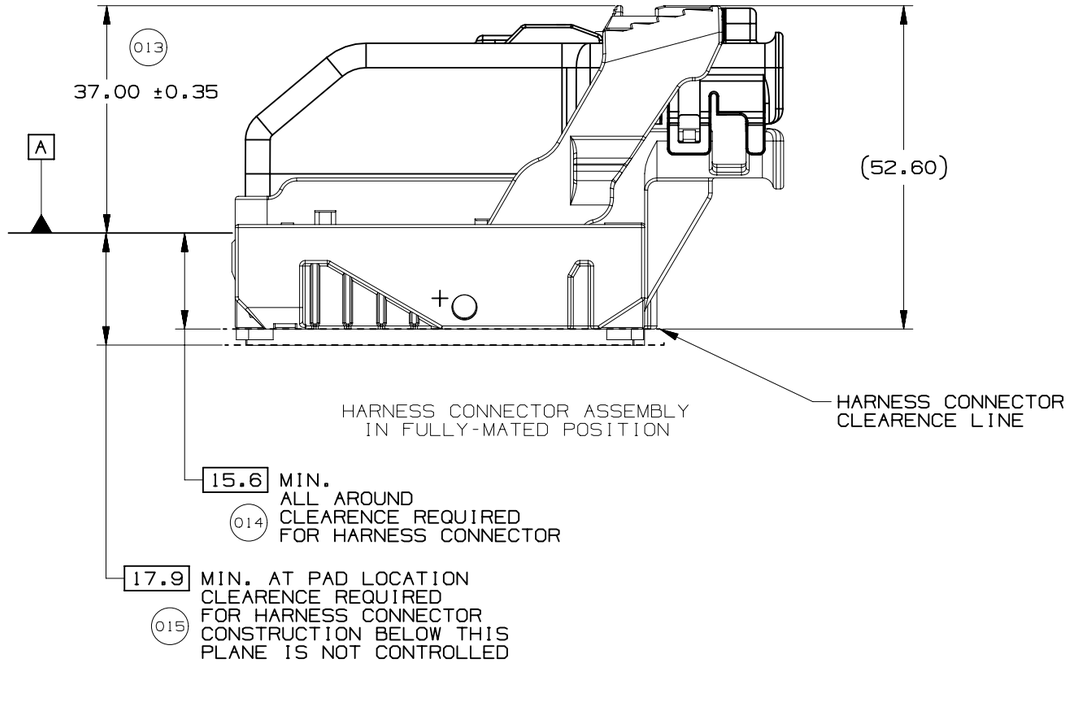

	GM	PAGE TITLE LOCATION AND PACKAGING DIMENSIONS REFERENCING INTERFACE DATUM A		DRAWING NUMBER 12672833	DWG STATUS ST: R / REV: 001 / PDI:	PAGE NUMBER 10 OF 22

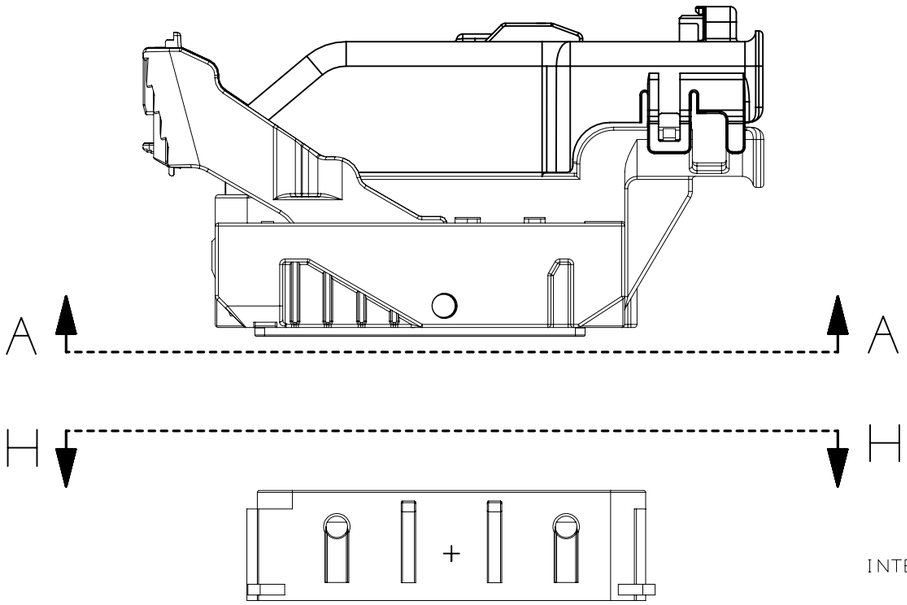

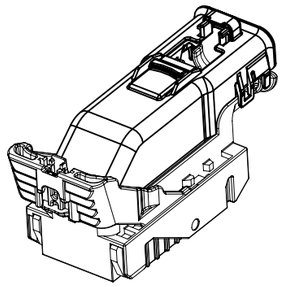

NOTE: REFERENCE THE COMPONENT TABLE
FOR KEY OPTIONS AND CONFIGURATIONS

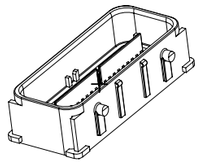

INTERFACE SIDE SHOWN ON ALL SECTION VIEWS

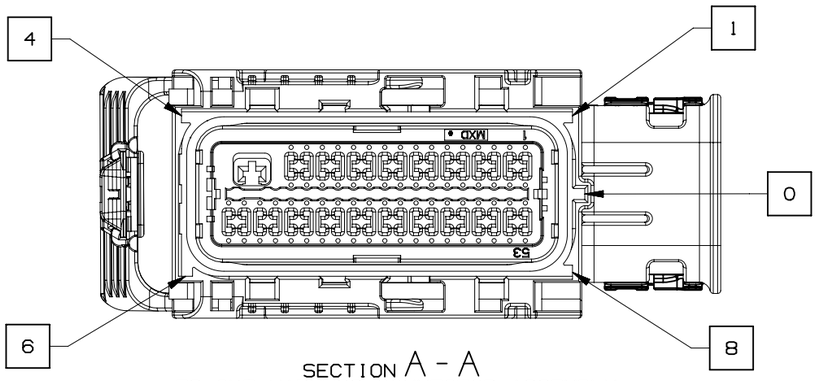

SECTION A - A
73 CKT HARNESS CONNECTOR ASSEMBLY
KEY OPTION B SHOWN

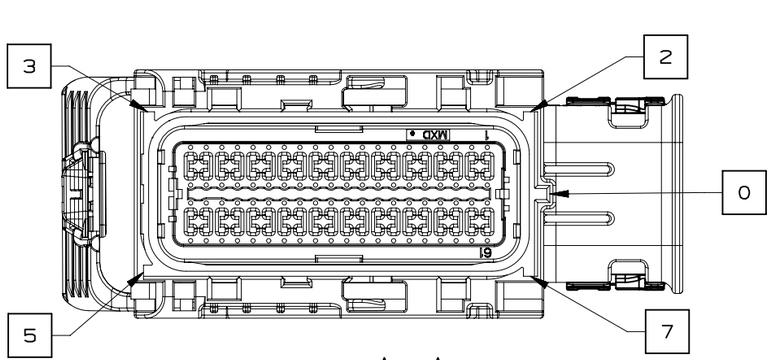

SECTION A - A
80 CKT HARNESS CONNECTOR ASSEMBLY
KEY OPTION K SHOWN

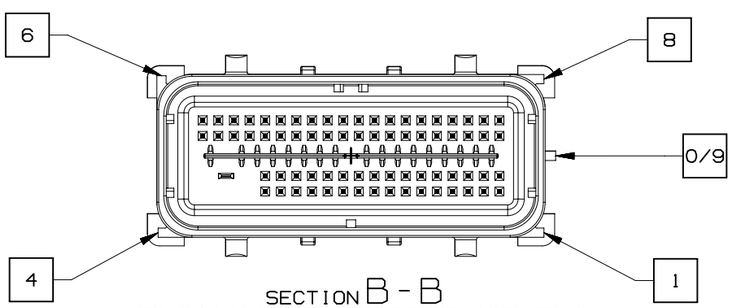

SECTION B - B
73 CKT HARNESS CONNECTOR ASSEMBLY
KEY OPTION B SHOWN

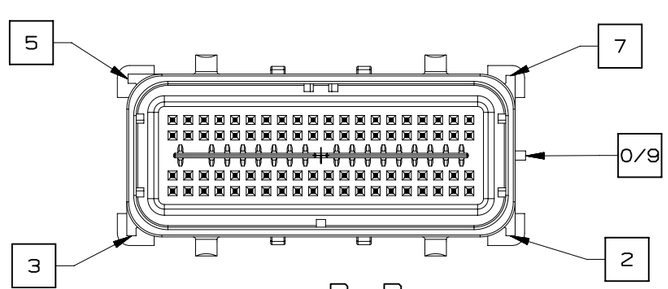

SECTION B - B
80 CKT HARNESS CONNECTOR ASSEMBLY
KEY OPTION K SHOWN

	GM	PAGE TITLE: KEY ID REF - WIRE DRESS OPTION 0		DRAWING NUMBER: 12672833	DWG STATUS: ST R / REV 001 / PDI		PAGE NUMBER: 11 OF 22

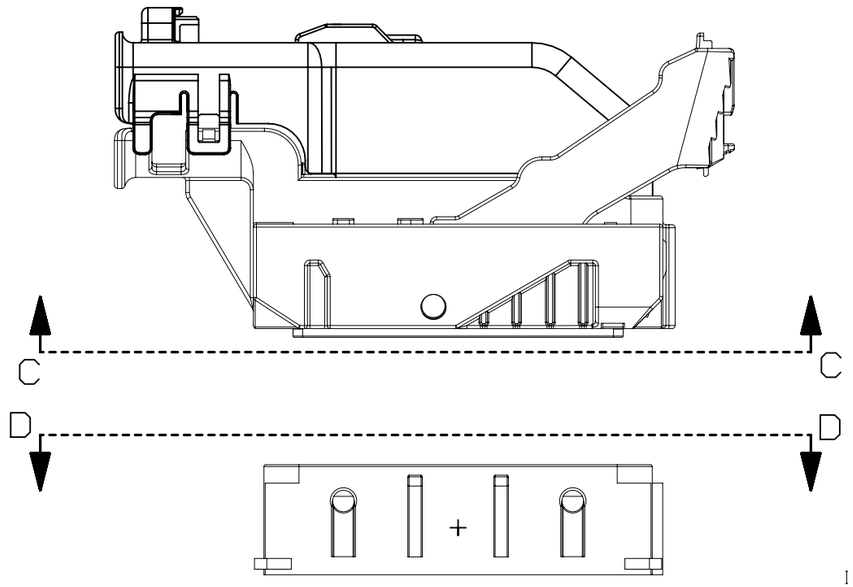

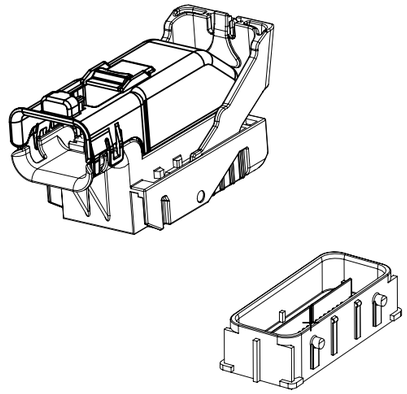

NOTE: REFERENCE THE COMPONENT TABLE FOR KEY OPTIONS AND CONFIGURATIONS

INTERFACE SIDE SHOWN ON ALL SECTION VIEWS

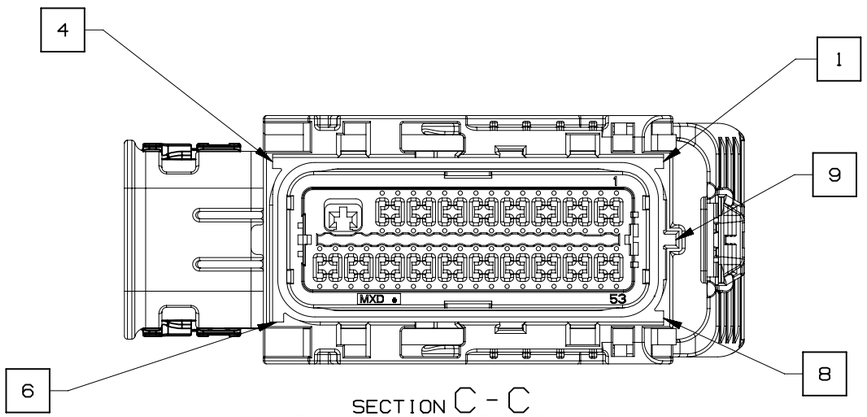

SECTION C - C
73 CKT HARNESS CONNECTOR ASSEMBLY
KEY OPTION B SHOWN

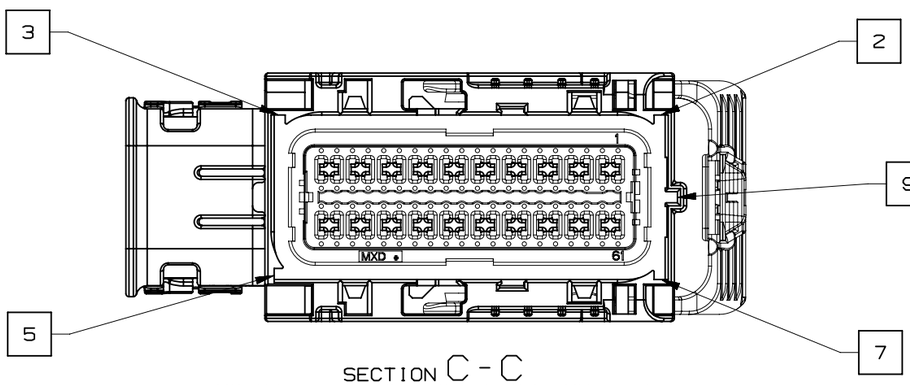

SECTION C - C
80 CKT HARNESS CONNECTOR ASSEMBLY
KEY OPTION K SHOWN

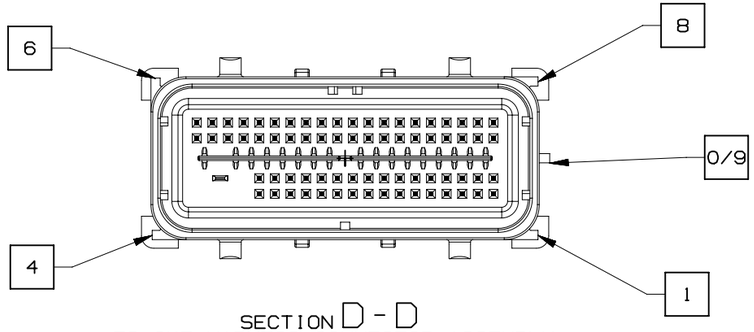

SECTION D - D
73 CKT HARNESS CONNECTOR ASSEMBLY
KEY OPTION B SHOWN

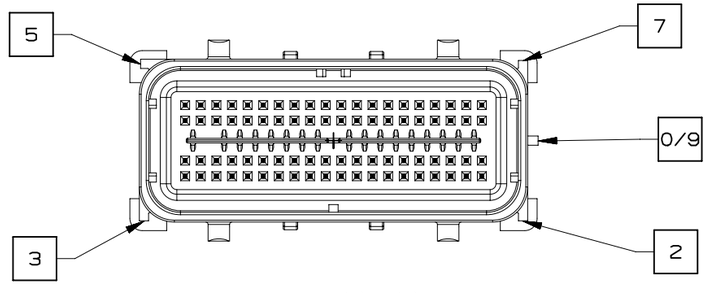

SECTION D - D
80 CKT HARNESS CONNECTOR ASSEMBLY
KEY OPTION K SHOWN

	GM	PAGE TITLE: KEY ID REF - WIRE DRESS OPTION 9		DRAWING NUMBER: 12672833	DWG STATUS: ST R / REV 001 / PDI		PAGE NUMBER: 12 OF 22

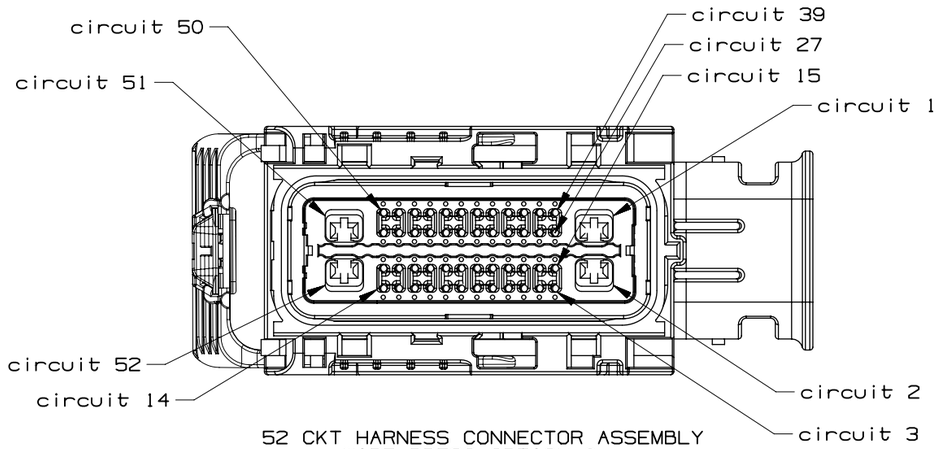

52 CKT HARNESS CONNECTOR ASSEMBLY
WIRE DRESS OPTION 0

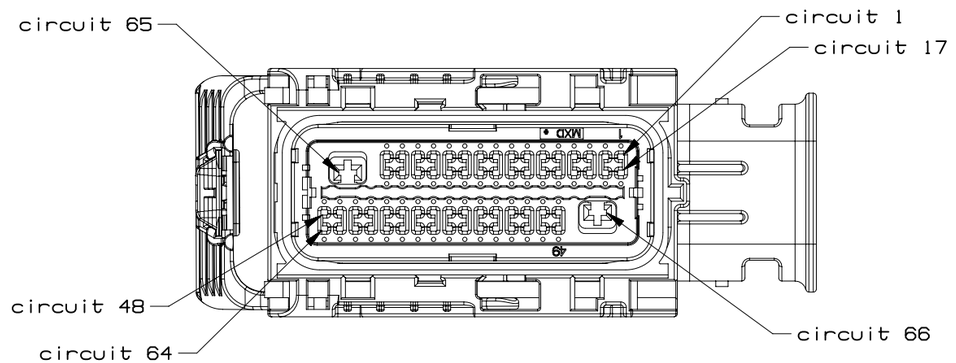

66 CKT HARNESS CONNECTOR ASSEMBLY
WIRE DRESS OPTION 0

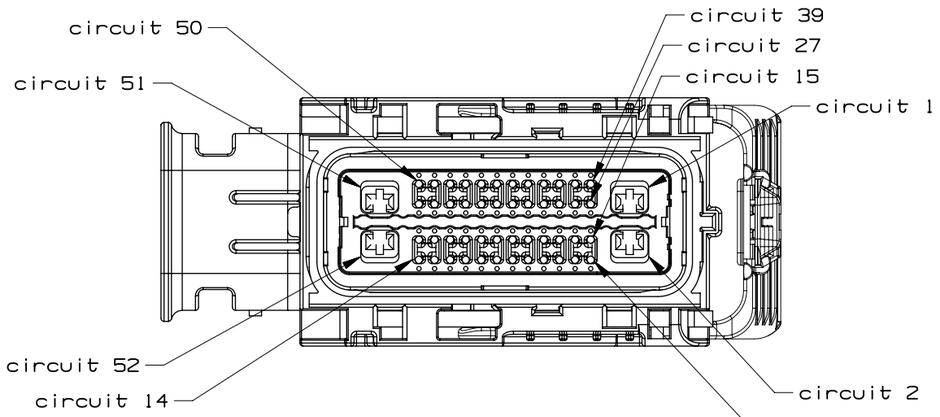

52 CKT HARNESS CONNECTOR ASSEMBLY
WIRE DRESS OPTION 9

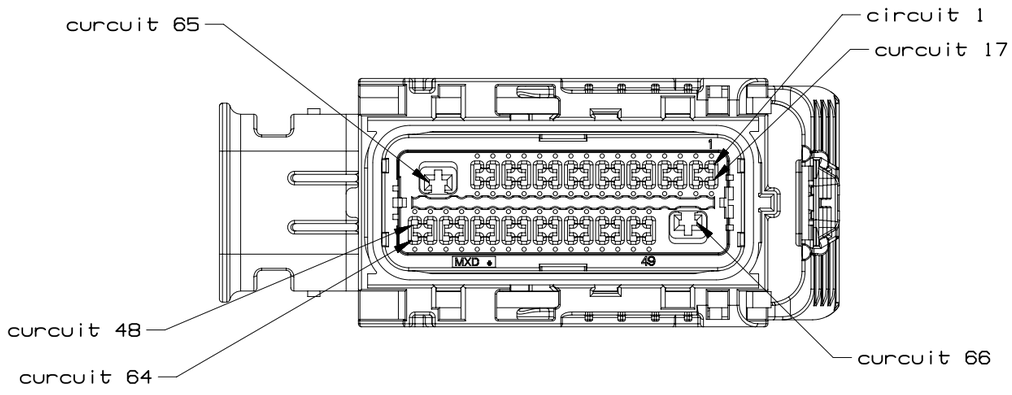

66 CKT HARNESS CONNECTOR ASSEMBLY
WIRE DRESS OPTION 9

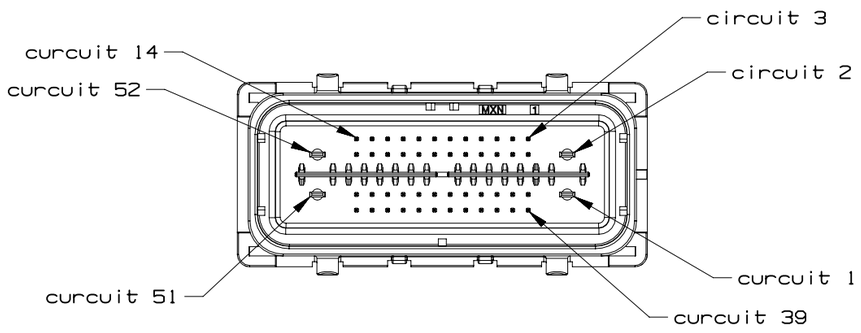

52 CKT COMPONENT CONNECTOR INTERFACE

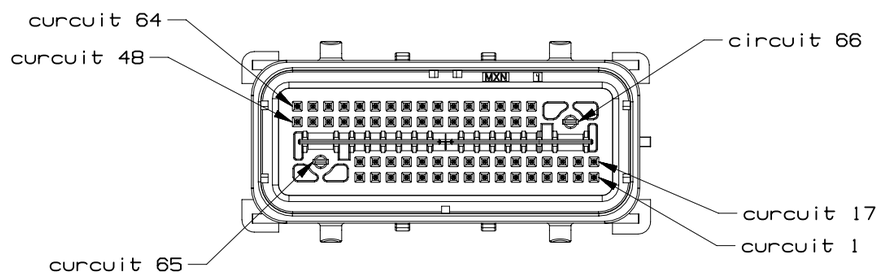

66 CKT COMPONENT CONNECTOR INTERFACE

	GM	PAGE TITLE CIRCUIT CONFIGURATIONS		DRAWING NUMBER 12672833	DWG STATUS ST: R / REV: 001 / PDI:		PAGE NUMBER 13 OF 22

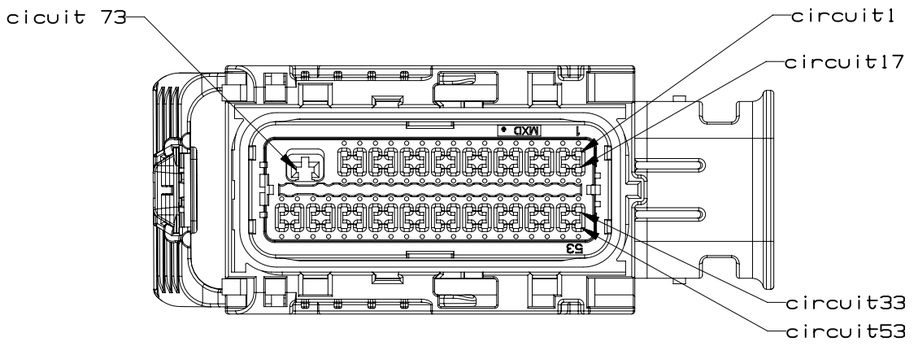

73 CKT HARNESS CONNECTOR ASSEMBLY
WIRE DRESS OPTION 0

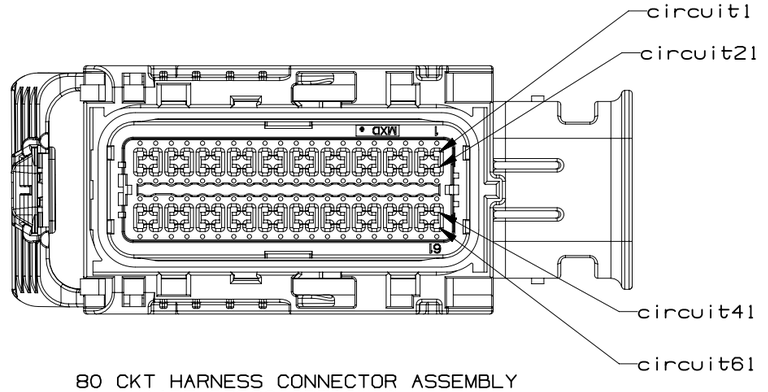

80 CKT HARNESS CONNECTOR ASSEMBLY
WIRE DRESS OPTION 0

INTERFACE SIDE SHOWN ON ALL VIEWS

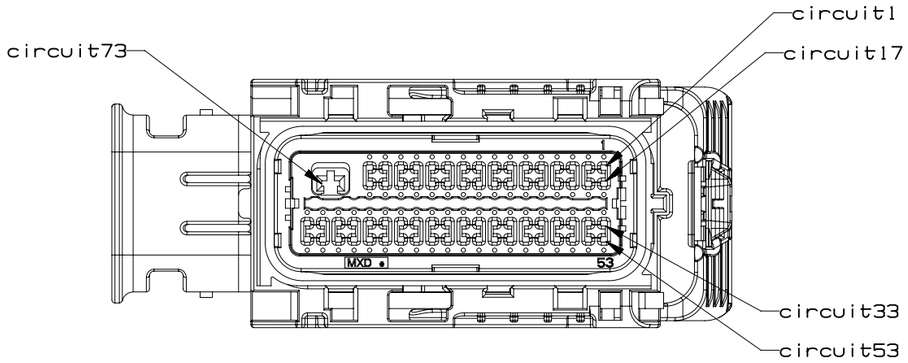

73 CKT HARNESS CONNECTOR ASSEMBLY
WIRE DRESS OPTION 9

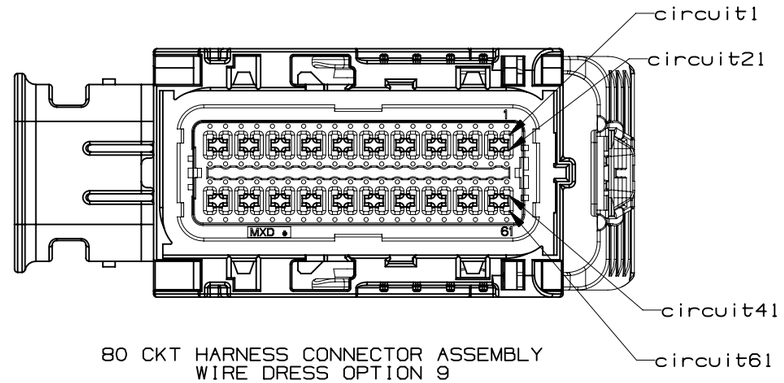

80 CKT HARNESS CONNECTOR ASSEMBLY
WIRE DRESS OPTION 9

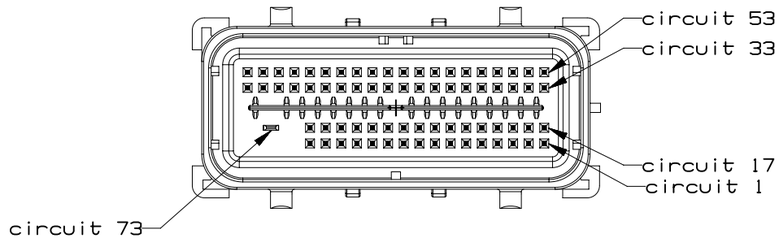

73 CKT COMPONENT CONNECTOR INTERFACE

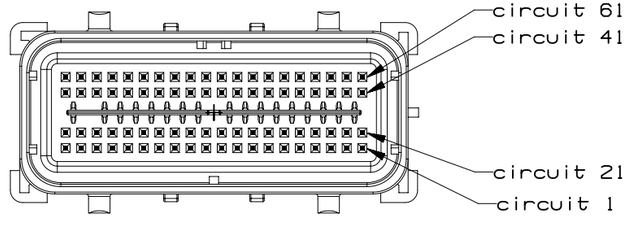

80 CKT COMPONENT CONNECTOR INTERFACE

	GM	PAGE TITLE: CIRCUIT CONFIGURATIONS		DRAWING NUMBER: 12672833	DWG STATUS ST: R	REV: 001	PDI:	PAGE NUMBER: 14 OF 22

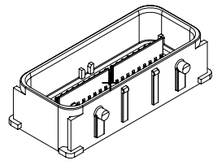

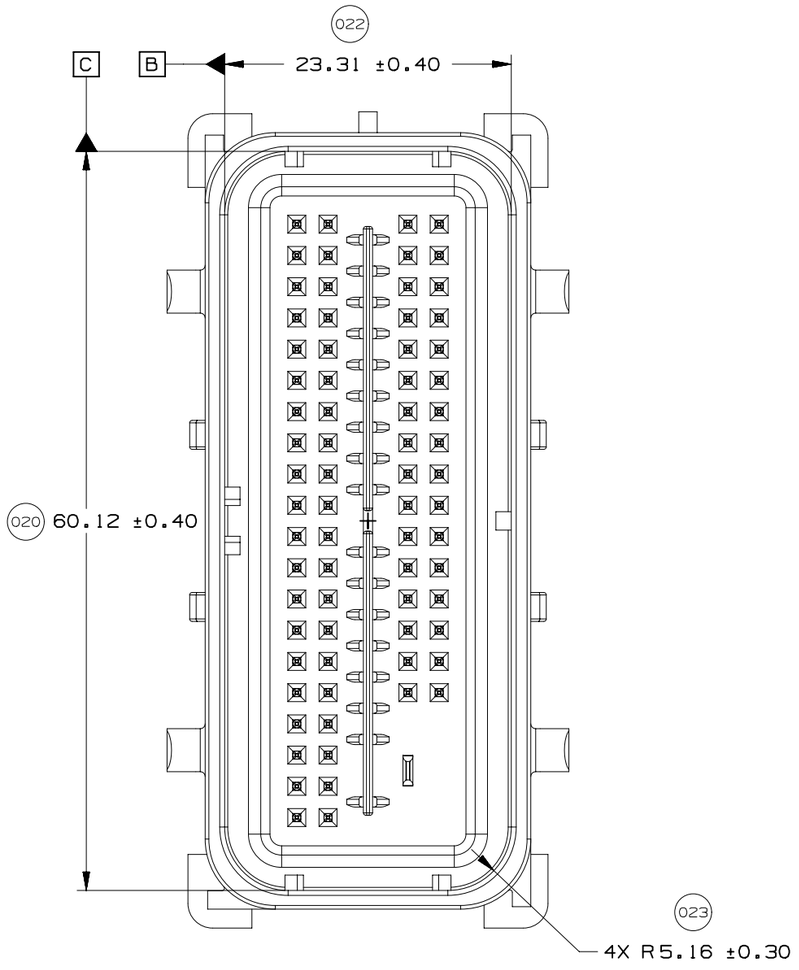

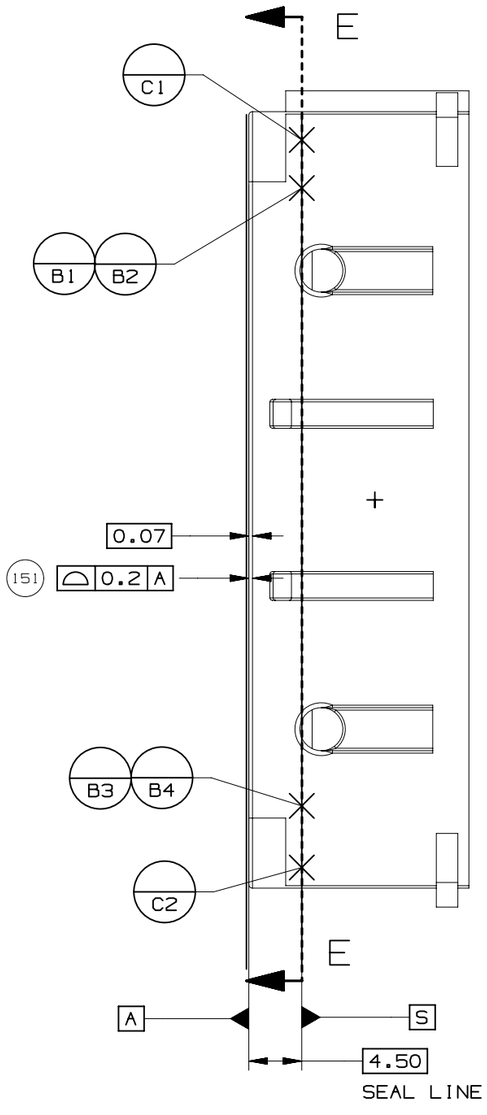

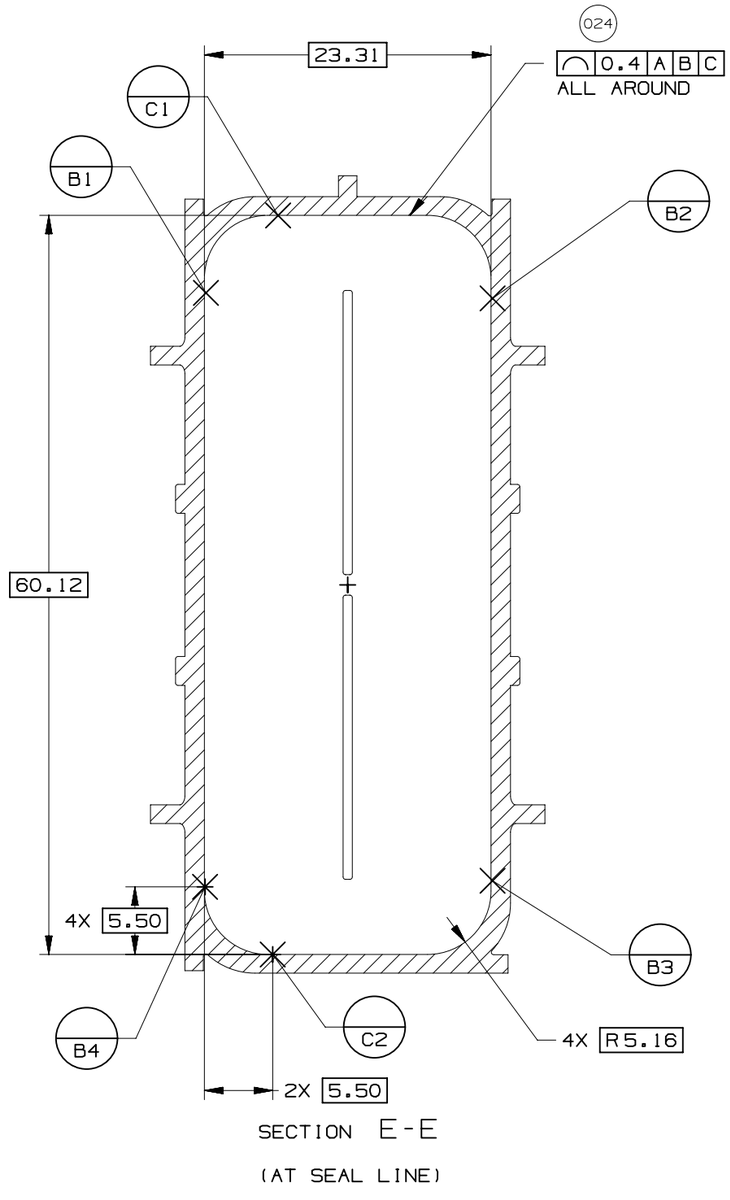

UNLESS SPECIFIED, TOLERANCE OF THE COMPONENT CONNECTOR INTERFACE TO BE 0.13 A B C

	GM	PAGE TITLE: COMPONENT CONNECTOR INTERFACE		DRAWING NUMBER: 12672833	DWG STATUS ST: R	REV: 001	PDI:	PAGE NUMBER: 15 OF 22

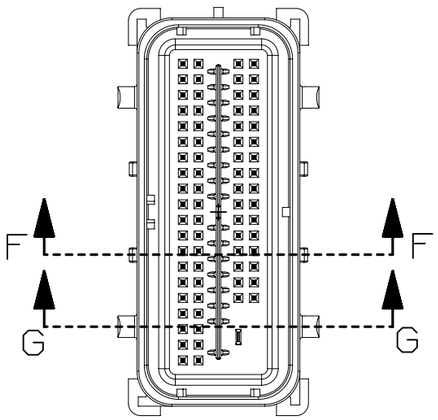

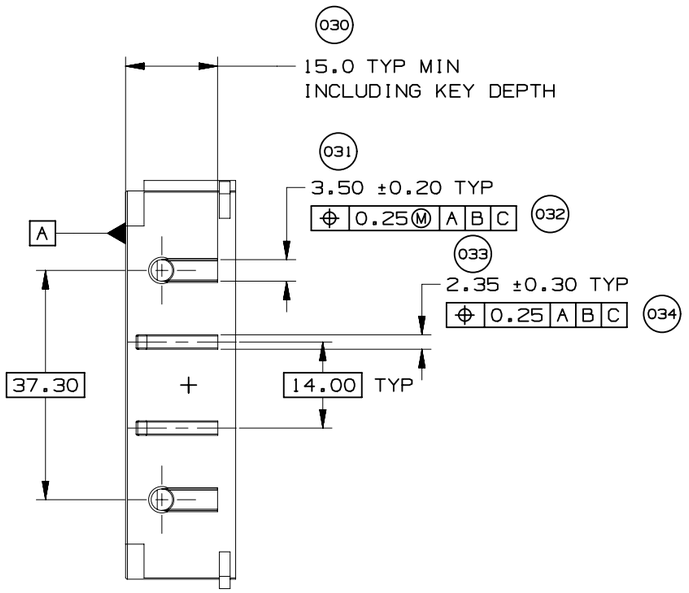

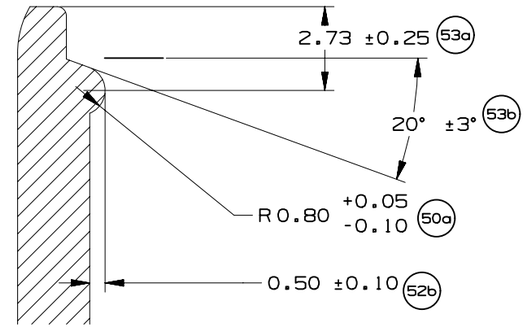

VIEW YY
SCALE 5:1

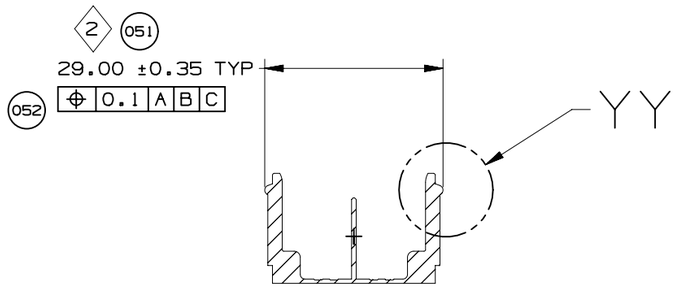

SECTION F-F
(RELEASE FEATURE)

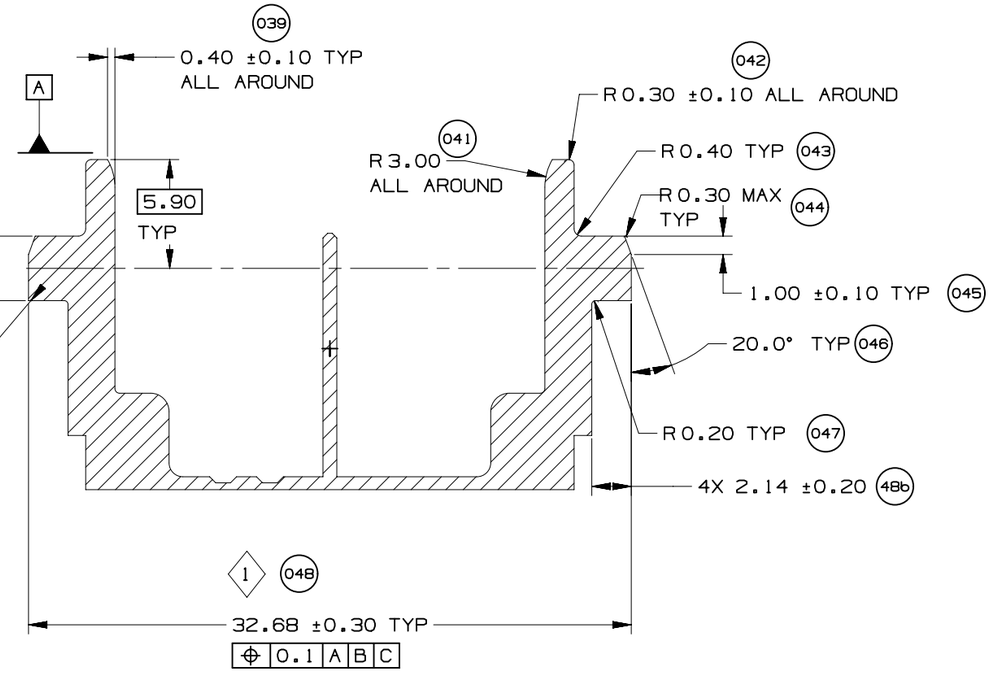

SECTION G-G
(CAM POST)

	GM	PAGE TITLE COMPONENT CONNECTOR INTERFACE		DRAWING NUMBER 12672833	DWG STATUS ST: R / REV: 001 / PDI:	PAGE NUMBER 16 OF 22	

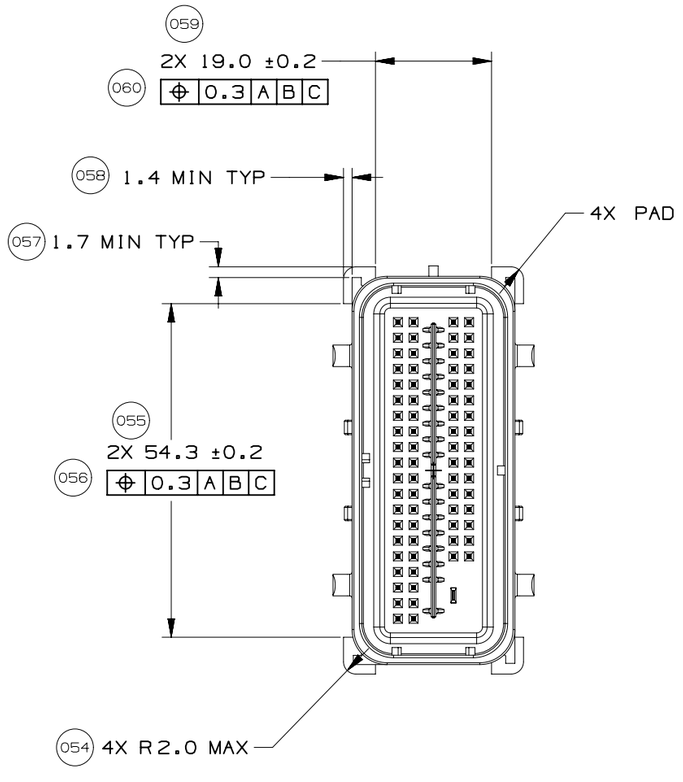

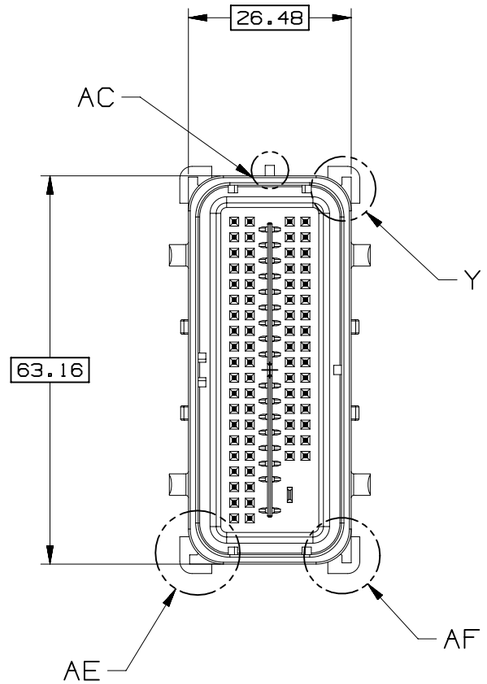

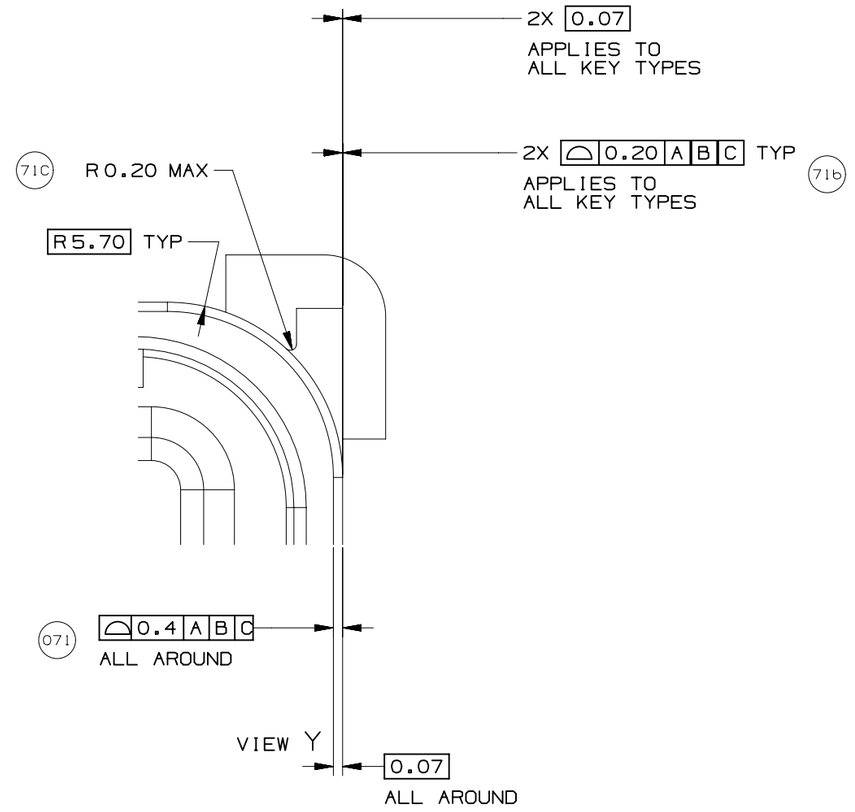

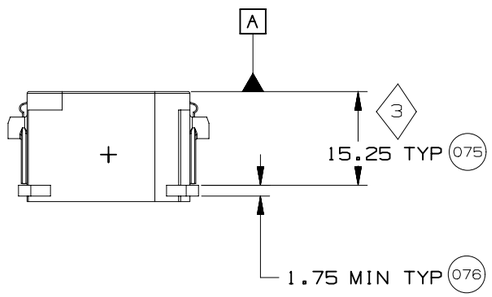

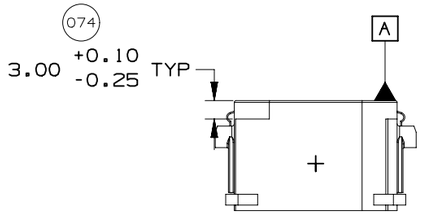

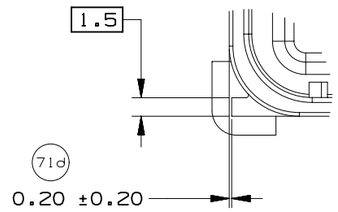

VIEW AE
KEY TYPE 2
SCALE 2:1

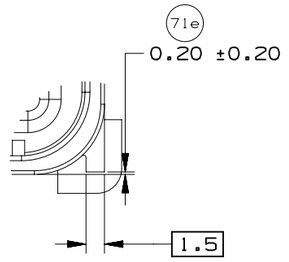

VIEW AF
KEY TYPE 1
SCALE 2:1

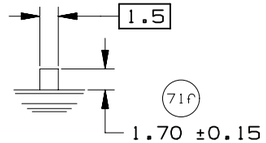

VIEW AC
KEY TYPE 3
SCALE 2:1

	GM	PAGE TITLE: COMPONENT CONNECTOR INTERFACE		DRAWING NUMBER: 12672833	DWG STATUS: ST R / REV 001 / PDI	PAGE NUMBER: 17 OF 22

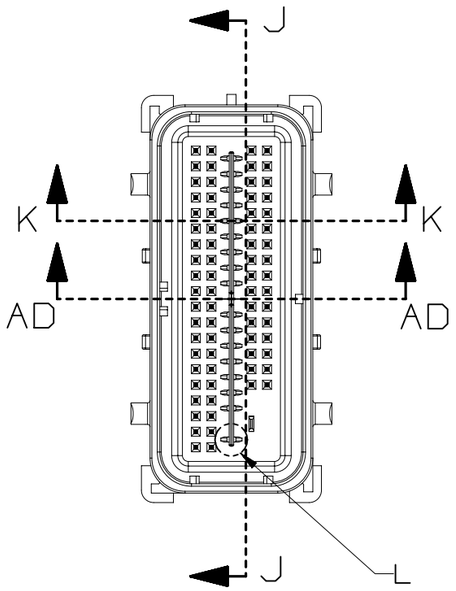

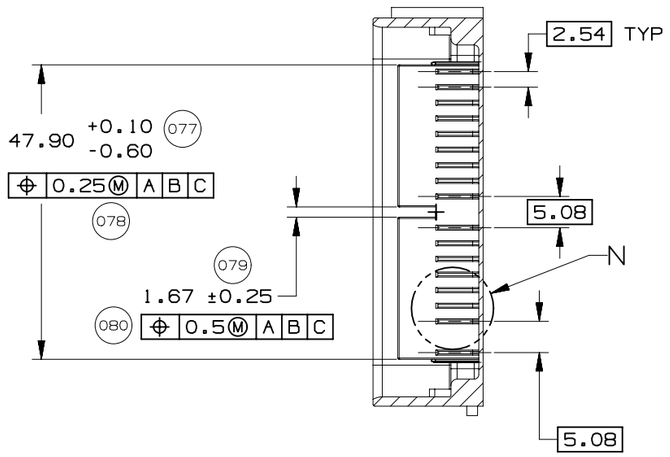

SECTION J-J

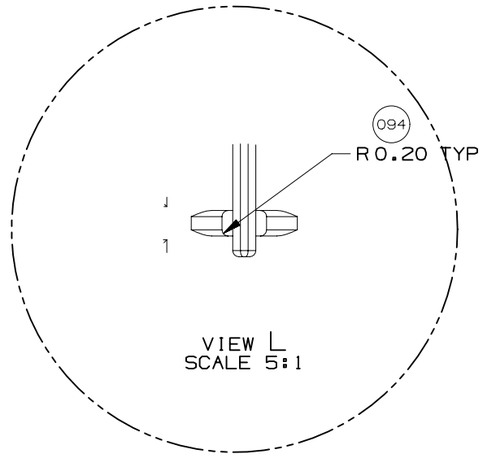

VIEW L
SCALE 5:1

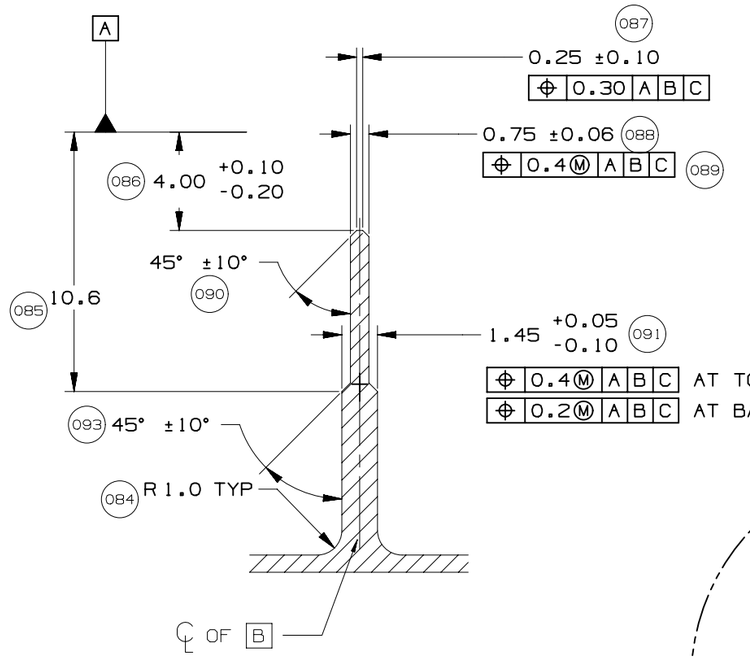

DETAIL M
TYPICAL
SCALE 4:1

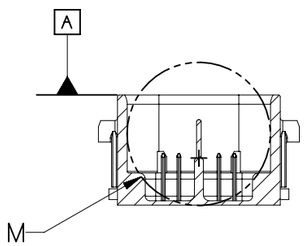

SECTION K-K

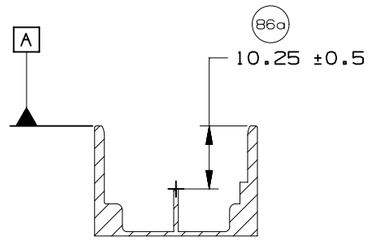

SECTION AD-AD

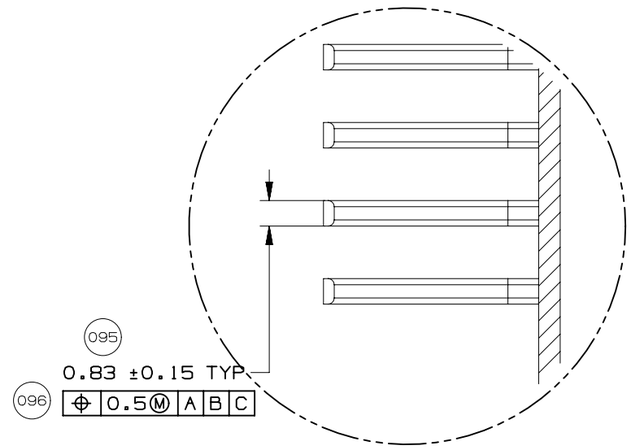

DETAIL N
SCALE 5:1

	GM	PAGE TITLE: COMPONENT CONNECTOR INTERFACE		DRAWING NUMBER: 12672833	DWG STATUS: ST R / REV 001 / PDI	PAGE NUMBER: 18 OF 22

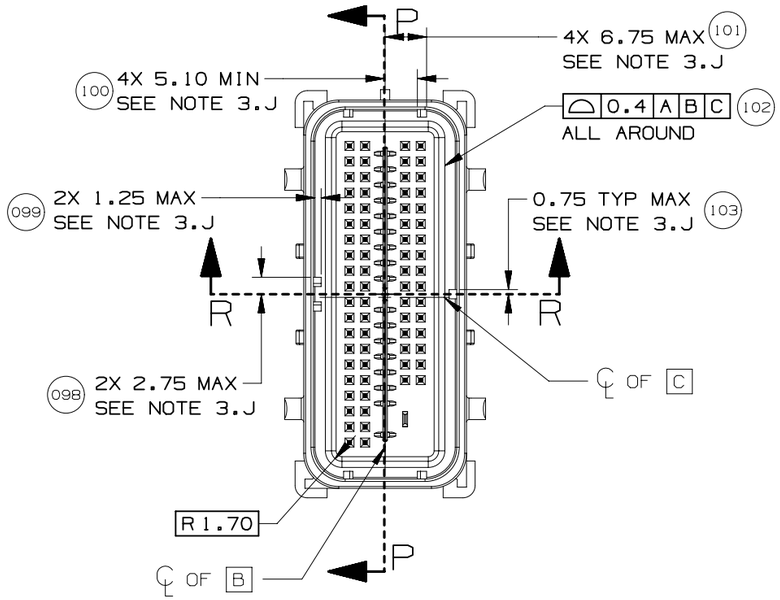

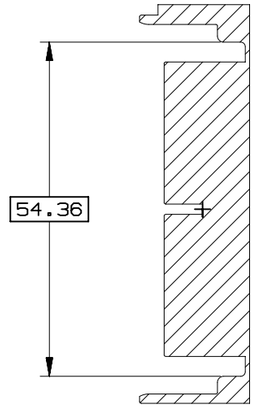

SECTION P-P

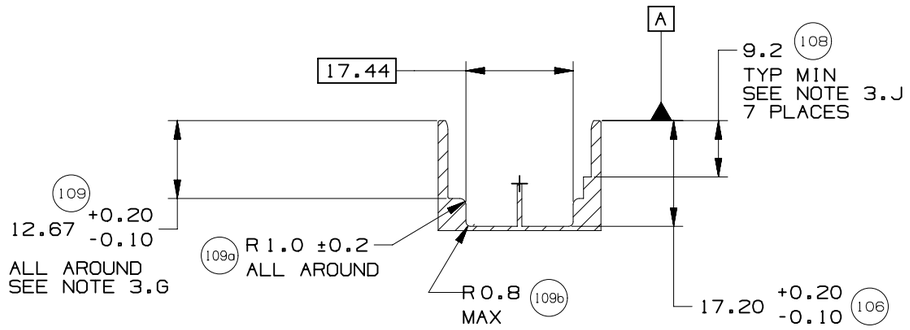

SECTION R-R

	GM	PAGE TITLE COMPONENT CONNECTOR INTERFACE		DRAWING NUMBER 12672833	DWG STATUS ST: R / REV: 001 / PDI:	PAGE NUMBER 19 OF 22	

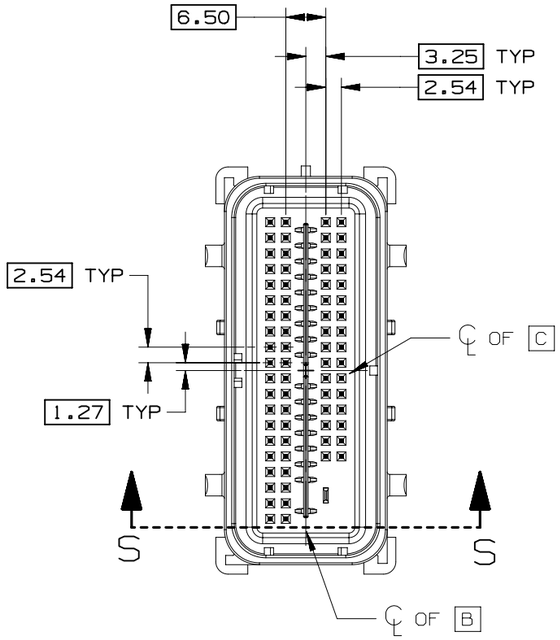

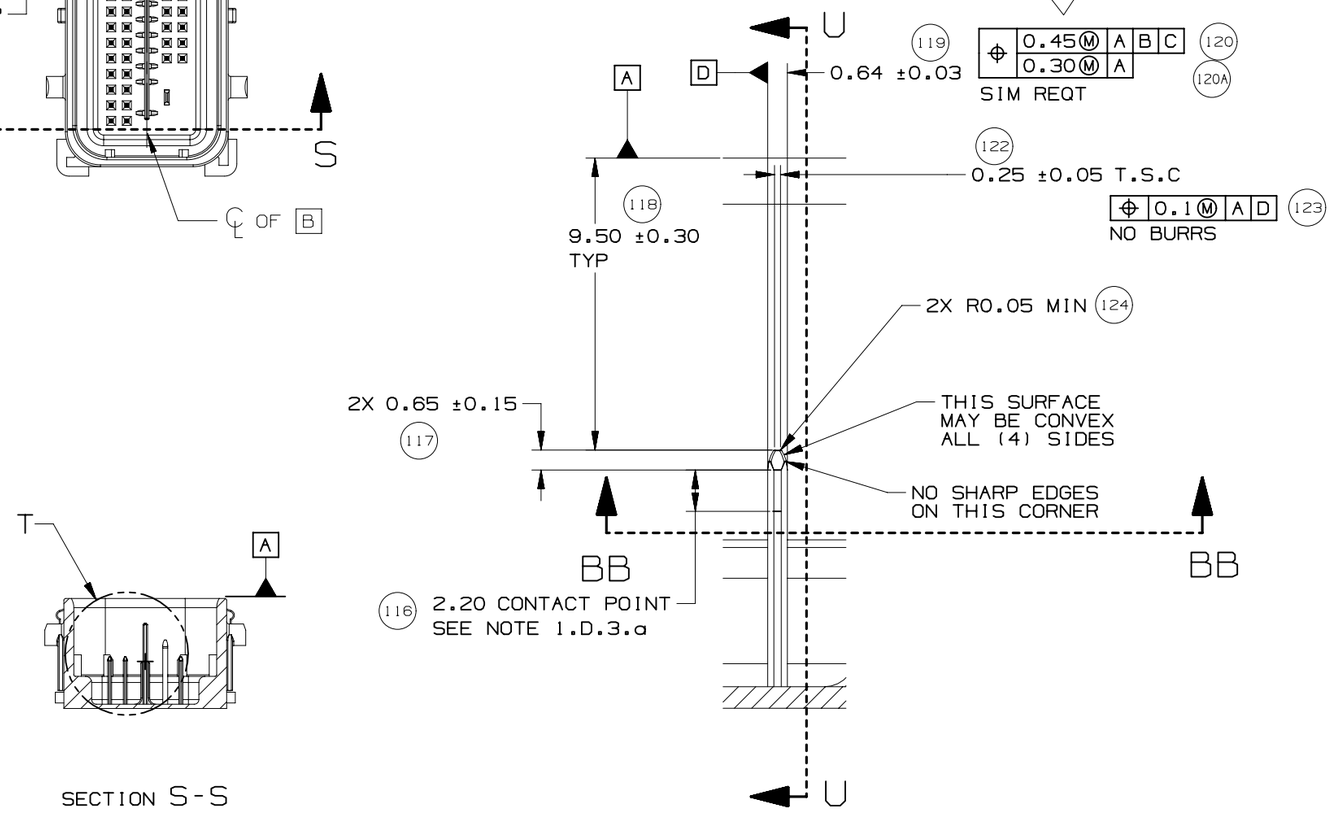

SECTION S-S

DETAIL T
TYPICAL
SCALE 5:1

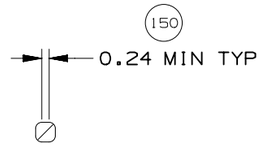

SECTION BB-BB

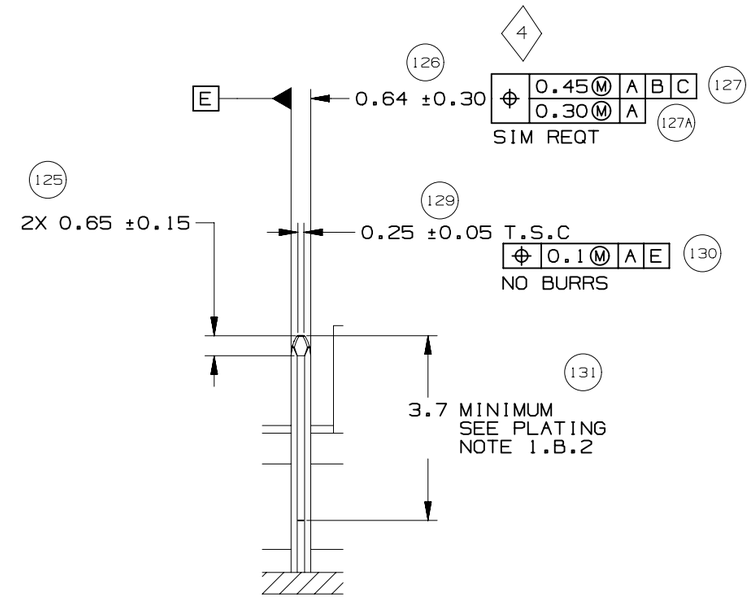

SECTION U-U
TYPICAL

	GM	PAGE TITLE: COMPONENT CONNECTOR INTERFACE		DRAWING NUMBER: 12672833	DWG STATUS ST: R	REV: 001	PDI:	PAGE NUMBER: 20 OF 22

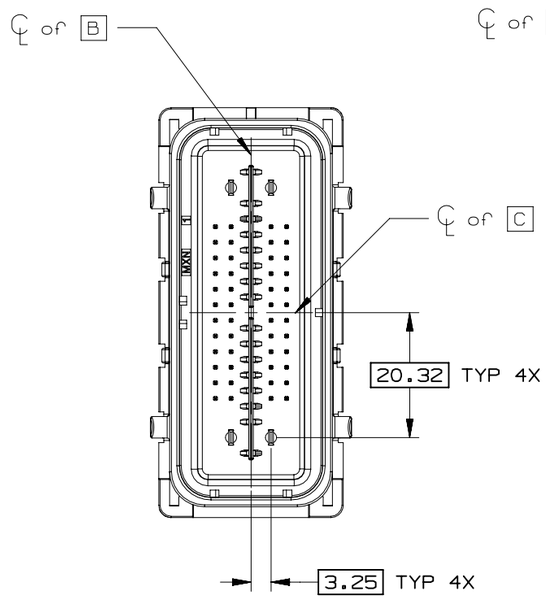

52 CKT COMPONENT
CONNECTOR INTERFACE

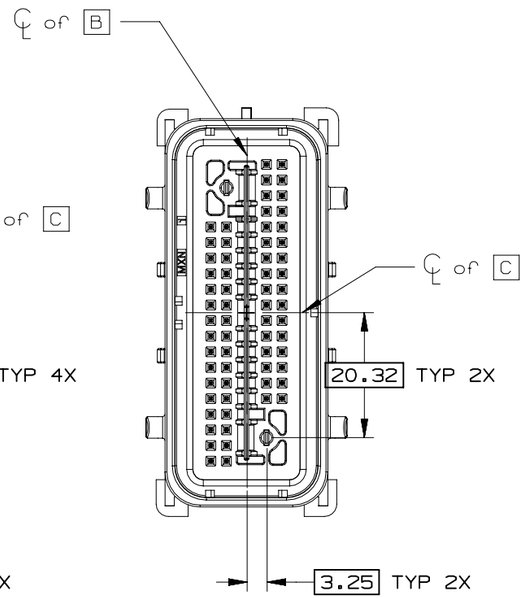

66 CKT COMPONENT
CONNECTOR INTERFACE

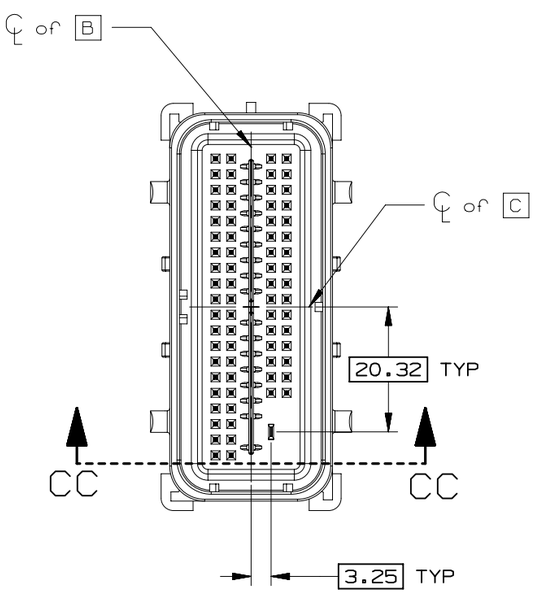

73 CKT COMPONENT
CONNECTOR INTERFACE

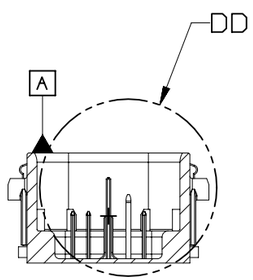

SECTION CC-CC

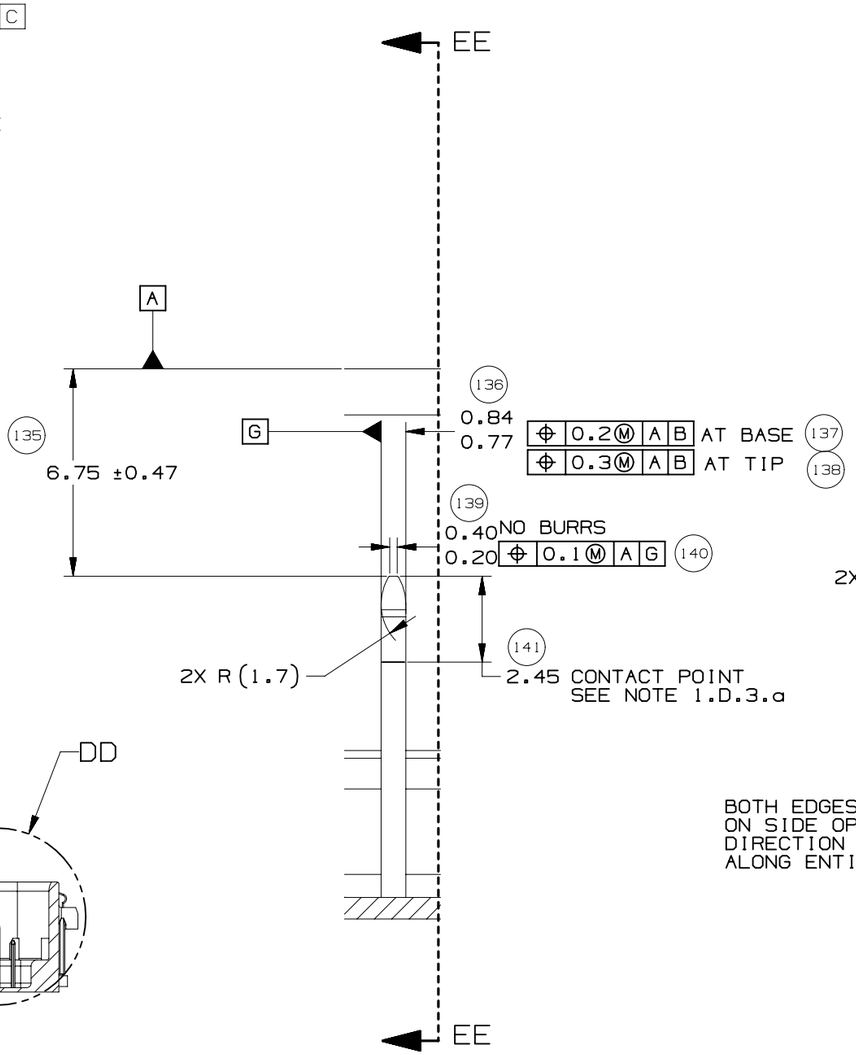

DETAIL DD
TYPICAL
SCALE 5:1

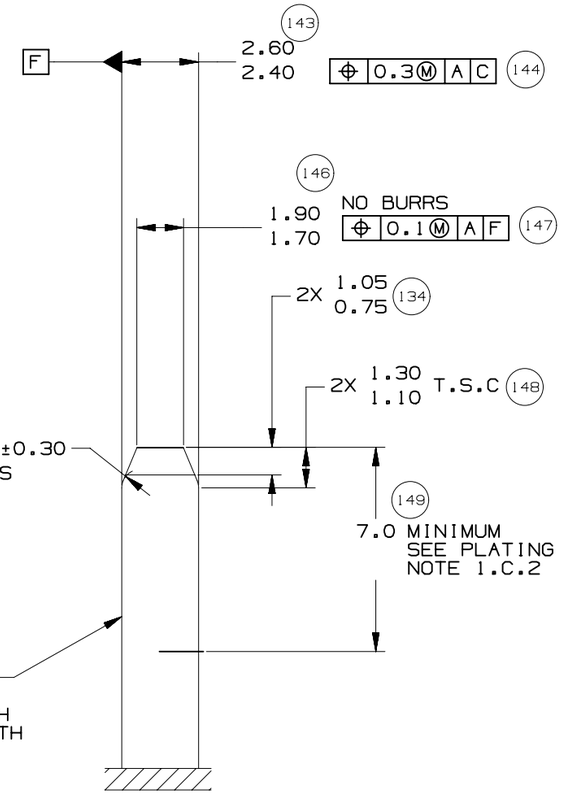

SECTION EE-EE
TYPICAL

	GM	PAGE TITLE: COMPONENT CONNECTOR INTERFACE		DRAWING NUMBER: 12672833	DWG STATUS: ST R / REV 001 / PDI		PAGE NUMBER: 21 OF 22

MOLEX MX64 RECEPTACLE TERMINAL INFORMATION							
ITEM	MOLEX P/N	GM P/N	WIRE SIZE MM2	TYPE	PLATING	REEL WIND DIRECTION	COMMENTS
1	34736-0025		0.35	ISO	SILVER	LEFT	
2	34736-0026	12672850	0.35	ISO	SILVER	RIGHT	
3	34736-0027		0.5 / 0.75	ISO	SILVER	LEFT	
4	34736-0028	12672851	0.5 / 0.75	ISO	SILVER	RIGHT	

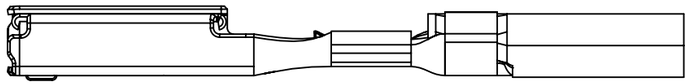

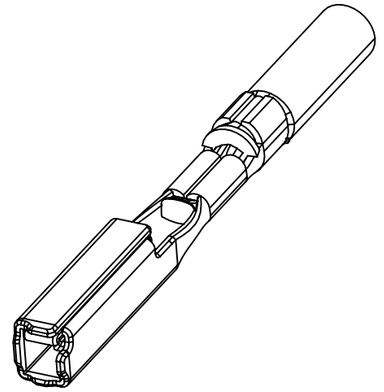

CAVITY PLUGS									
ITEM	MFG	MFG P/N	GM P/N RD	SIZE	COLOR	MFG DRAWING	PROD SPEC	APP SPEC	COMMENTS
1	MOLEX	34586-0001	12674820	0.64	NATURAL	SD-34586-001	PS-34566-0000	AS-34566-001	
2	YAZAKI	7158-3114-90	12674821	2.8	BLUE	7158-3114-90	YPES-11-04-062	YPES-15-299	

ITEM 1

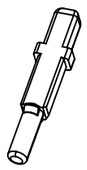

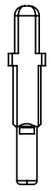

ITEM 2

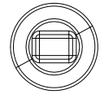

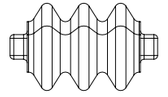

	GM	PAGE TITLE: ADDITIONAL COMPONENTS REQUIRED		DRAWING NUMBER: 12672833	DWG STATUS ST: R	REV: 001	PDI:	PAGE NUMBER: 22 OF 22

INDEX	
PAGE TITLE	PAGE
TITLE BLOCK	1
REVISION BLOCK	2
PART BLOCK	3
KPC BLOCK	4
COMPONENT TABLE	5
NOTES	6
NOTES	7
WIRE DRESS PACKAGING DIMENSIONS	8
LOCATION AND PACKAGING DIMENSIONS REFERENCING INTERFACE DATUMS B & C	9
LOCATION AND PACKAGING DIMENSIONS REFERENCING INTERFACE DATUM A	10
KEY ID REF - WIRE DRESS OPTION 0	11
KEY ID REF - WIRE DRESS OPTION 9	12
CIRCUIT CONFIGURATIONS	13
CIRCUIT CONFIGURATIONS	14
COMPONENT CONNECTOR INTERFACE	15
COMPONENT CONNECTOR INTERFACE	16
COMPONENT CONNECTOR INTERFACE	17
COMPONENT CONNECTOR INTERFACE	18
COMPONENT CONNECTOR INTERFACE	19
COMPONENT CONNECTOR INTERFACE	20
COMPONENT CONNECTOR INTERFACE	21
ADDITIONAL COMPONENTS REQUIRED	22

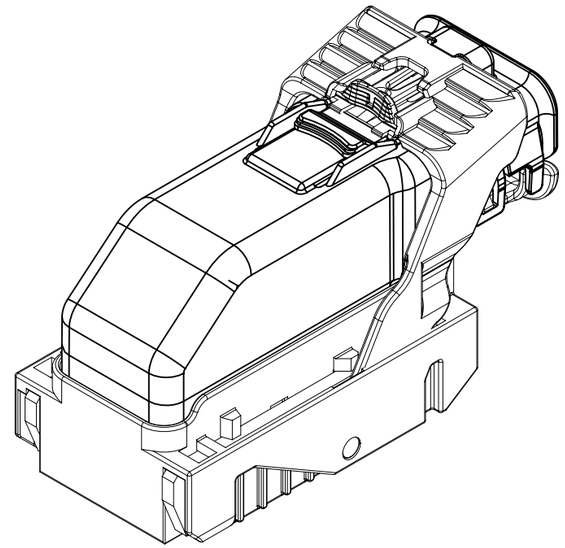

ISO VIEW

GM

UNLESS OTHERWISE SPECIFIED: THIS DOCUMENT IS IN ACCORDANCE WITH ASME Y14.5M-1994 AS AMMENDED BY THE GM GLOBAL DIMENSIONING AND TOLERANCING ADDENDUM-1997. ALL GEOMETRIC TOLERANCES AND RELATED DATUMS APPLY RFS. RULE #1 (PERFECT FORM AT MMC) DOES NOT APPLY WHEN A RELATIONSHIP BETWEEN FEATURES IS ESTABLISHED BY ORIENTATION OR LOCATION TOLERANCES. SEPARATE POSITION CALLOUTS MAY BE GAGED SEPARATELY REGARDLESS OF DATUM REFERENCES.

CHANGE RESTRICTED
NO MANUAL CHANGES

DO NOT SCALE

METRIC

DIMENSIONS SHOWN IN MILLIMETERS UNLESS OTHERWISE SPECIFIED

REFERENCE
12H (MOLEX AUTOMOTIVE)

	DATE
DRAFTER	05JN15
APVD1	
APVD2	
APVD3	
APVD4	
APVD5	

DRAWING NAME
HARNESS CONN ASM-SEALED 52/66/73/80 CKTS,MX123

DRAWING NUMBER
12672833

DWG STATUS		
ST	REV	PDI
R	001	

PAGE NUMBER
1 OF 22

PAGE	DWG STATUS					REVISION HISTORY	AUTH	DR	CK	ENG
	DATE	ST	REV	CHG	PDI					
	05JN15	R	001			RELEASED TO PRODUCTION AT DLS A	CRMRJE	DFK		

PAGE	DWG STATUS					REVISION HISTORY	AUTH	DR	CK	ENG
	DATE	ST	REV	CHG	PDI					

	GM	PAGE TITLE REVISION BLOCK		DRAWING NUMBER 12672833	DWG STATUS ST: R REV: 001 PDI:

HIERARCHY /QUANTITY	DWG ITM	DWG RLTN SHIP	PART NUMBER	P-A ITM	D L S	ST	REV	P D I	N M C I	MASS (KG)	PART NAME	NOTES
	28	RD	12674821		A	C	001			0.000	YAZAKI: 7158-3114-90	2.8MM CAVITY PLUG
	27	RD	12674820		A		001			0.000	PLUG-WRG HARN CONN MX0.64	
	26	RD	12672851		A		001			0.000	TERM-AG 0.5MM/0.75MM ISO,MX64	
	25	RD	12672850		A		001			0.000	TERM-AG 0.35MM ISO,MX64	
	24	RD	12582676		A	C	003			0.011	WIRE HARNESS COVER	52/66/73/80 WAY
	23	RD	12672869		A	2	001			0.050	HARN CONN ASM 80 CKT	KEY J OPTION 9
	22	RD	12672871		A	2	001			0.050	HARN CONN ASM 80 CKT	KEY H OPTION 9
	21	RD	12672873		A	2	001			0.050	HARN CONN ASM 80 CKT	KEY G OPTION 9
	20	RD	12672868		A	2	001			0.050	HARN CONN ASM 80 CKT	KEY J OPTION 0
	19	RD	12672870		A	2	001			0.050	HARN CONN ASM 80 CKT	KEY H OPTION 0
	18	RD	12672872		A	2	001			0.050	HARN CONN ASM 80 CKT	KEY G OPTION 0
	17	RD	12672867		A	2	001			0.050	HARN CONN ASM 73 CKT	KEY F OPTION 9
	16	RD	12672865		A	2	001			0.050	HARN CONN ASM 73 CKT	KEY C OPTION 9
	15	RD	12672863		A	2	001			0.050	HARN CONN ASM 73 CKT	KEY B OPTION 9
	14	RD	12672861		A	2	001			0.050	HARN CONN ASM 73 CKT	KEY A OPTION 9
	13	RD	12672866		A	2	001			0.050	HARN CONN ASM 73 CKT	KEY F OPTION 0
	12	RD	12672864		A	2	001			0.050	HARN CONN ASM 73 CKT	KEY C OPTION 0
	11	RD	12672862		A	2	001			0.050	HARN CONN ASM 73 CKT	KEY B OPTION 0
	10	RD	12672860		A	2	001			0.050	HARN CONN ASM 73 CKT	KEY A OPTION 0
	09	RD	12672859		A	2	001			0.050	HARN CONN ASM 66 CKT	KEY C OPTION 9
	08	RD	12672857		A	2	001			0.050	HARN CONN ASM 66 CKT	KEY A OPTION 9
	07	RD	12672858		A	2	001			0.050	HARN CONN ASM 66 CKT	KEY C OPTION 0
	06	RD	12672856		A	2	001			0.050	HARN CONN ASM 66 CKT	KEY A OPTION 0
	05	RD	12672855		A	2	001			0.054	HARN CONN ASM 52 CKT	KEY C OPTION 9
	04	RD	12672853		A	2	001			0.050	HARN CONN ASM 52 CKT	KEY A OPTION 9
	03	RD	12672854		A	2	001			0.054	HARN CONN ASM 52 CKT	KEY C OPTION 0
	02	RD	12672852		A	2	001			0.050	HARN CONN ASM 52 CKT	KEY A OPTION 0
	01	RD	12672833		A		001			8.751	HARNESS CONN ASM-SEALED 52/66/73/80 CKTS,MX	
											DRAWING	

PARTS SHOWN ON DRAWING

GM

PAGE TITLE
PART BLOCK

DRAWING NUMBER
12672833

DWG STATUS		
ST	REV	PDI
R	001	

KEY PRODUCT CHARACTERISTICS
(IN ACCORDANCE WITH QN 1805 OR QN 1050)

▽ SAFETY/COMPLIANCE

◇ FIT/FUNCTION

TOTAL ON DRAWING	4
LAST NO. USED	4

NO	TYPE	DESCRIPTION	RATIONALE	PAGE/ZONE
1	F/F	32.68	IMPROVE CONNECTOR SYSTEM MATING	16
2	F/F	29.00	INSURE PROPER RELEASE OF LEVER	16
3	F/F	15.25	INSURE FINAL MATE POSITION	17
4	F/F	POSITIONAL TOLERANCE (2 PLACES)	INSURE CONNECTOR SYSTEM MATEABILITY	20

					APPLICABLE COMPONENTS					
LINE	MFG.	MFG. P/N	GM P/N	EFFECTIVE DATE	DESCRIPTION	KEY OPTION	WIRE DRESS OPTION	KEY CONFIG.	COLOR	STATUS
-										
1	MOLEX	34565-0003	12582676	02JN03	MX123 DRESS COVER 52/66/73/80 CKT	N/A	N/A	N/A	BLACK	AVAILABLE
2	MOLEX	160094-0001	12672852	01SP13	MX123 HRNS CONN ASSY 52 CKT	A	0	1458	BLACK	AVAILABLE
3	MOLEX	160094-0003	12672854	01SP13	MX123 HRNS CONN ASSY 52 CKT	C	0	2467	BLUE	AVAILABLE
4	MOLEX	160094-0013	12672853	01SP13	MX123 HRNS CONN ASSY 52 CKT	A	9	1458	BLACK	AVAILABLE
5	MOLEX	160094-0015	12672855	01SP13	MX123 HRNS CONN ASSY 52 CKT	C	9	2467	BLUE	AVAILABLE
6	MOLEX	34822-0013	12672856	01SP13	MX123 HRNS CONN ASSY 66 CKT	A	0	1458	BLACK	AVAILABLE
7	MOLEX	34822-0033	12672858	01SP13	MX123 HRNS CONN ASSY 66 CKT	C	0	2467	BLUE	AVAILABLE
8	MOLEX	34822-0023	12672857	01SP13	MX123 HRNS CONN ASSY 66 CKT	A	9	1458	BLACK	AVAILABLE
9	MOLEX	34822-0043	12672859	01SP13	MX123 HRNS CONN ASSY 66 CKT	C	9	2467	BLUE	AVAILABLE
10	MOLEX	34566-0103	12672860	11JN04	MX123 HRNS CONN ASSY 73 CKT	A	0	1458	BLACK	AVAILABLE
11	MOLEX	34566-0203	12672862	11JN04	MX123 HRNS CONN ASSY 73 CKT	B	0	1468	ST GRAY	AVAILABLE
12	MOLEX	34566-0303	12672864	09AP08	MX123 HRNS CONN ASSY 73 CKT	C	0	2467	BLUE	AVAILABLE
13	MOLEX	34566-0603	12672866	05DC14	MX123 HRNS CONN ASSY 73 CKT	F	0	1357	NATURAL	AVAILABLE
14	MOLEX	34566-1303	12672861	11JN04	MX123 HRNS CONN ASSY 73 CKT	A	9	1458	BLACK	AVAILABLE
15	MOLEX	34566-1403	12672863	11JN04	MX123 HRNS CONN ASSY 73 CKT	B	9	1468	ST GRAY	AVAILABLE
16	MOLEX	34566-1503	12672865	09AP08	MX123 HRNS CONN ASSY 73 CKT	C	9	2467	BLUE	AVAILABLE
17	MOLEX	34566-1803	12672867	05DC14	MX123 HRNS CONN ASSY 73 CKT	F	9	1357	NATURAL	AVAILABLE
18	MOLEX	34566-0703	12672872	09AP08	MX123 HRNS CONN ASSY 80 CKT	G	0	1358	BLUE	AVAILABLE
19	MOLEX	34566-0803	12672870	11JN04	MX123 HRNS CONN ASSY 80 CKT	H	0	2458	ST GRAY	AVAILABLE
20	MOLEX	34566-0903	12672868	T.B.D	MX123 HRNS CONN ASSY 80 CKT	J	0	2457	BLACK	NOT ACTIVE
21	MOLEX	34566-1903	12672873	09AP08	MX123 HRNS CONN ASSY 80 CKT	G	9	1358	BLUE	AVAILABLE
22	MOLEX	34566-2003	12672871	11JN04	MX123 HRNS CONN ASSY 80 CKT	H	9	2458	ST GRAY	AVAILABLE
23	MOLEX	34566-2103	12672869	T.B.D	MX123 HRNS CONN ASSY 80 CKT	J	9	2457	BLACK	NOT ACTIVE
24	MOLEX	34736-0028	12672851	01AU10	MX64 RCPT TERM Ag 0.5mm/0.75mm ISO GAGE B (RIGHT PAYOFF)	N/A	N/A	N/A	N/A	AVAILABLE
25	MOLEX	34736-0026	12672850	01AU10	MX64 RCPT TERM Ag 0.35mm ISO GAGE B (RIGHT PAYOFF)	N/A	N/A	N/A	N/A	AVAILABLE
26	MOLEX	34586-0001	12674820	11JN04	MX123 0.64mm GROMMET PLUG	N/A	N/A	N/A	NATURAL	AVAILABLE
27	YAZAKI	7116-4150-02	12588066	02JN03	2.8mm YESC SEALED FEMALE TERMINAL TIN 0.35mm2-0.50mm2	N/A	N/A	N/A	N/A	NOT ACTIVE
28	YAZAKI	7116-4151-02	12588067	02JN03	2.8mm YESC SEALED FEMALE TERMINAL TIN 0.75mm2-1.0mm2	N/A	N/A	N/A	N/A	NOT ACTIVE
29	YAZAKI	7116-4152-02	12582685	02JN03	2.8mm YESC SEALED FEMALE TERMINAL TIN 1.5mm2-2.5mm2	N/A	N/A	N/A	N/A	AVAILABLE
30	YAZAKI	7158-3111-60	12588068	02JN03	2.8mm CABLE SEAL (wire O.D. range 1.2mm-1.9mm)	N/A	N/A	N/A	GREEN	NOT ACTIVE
31	YAZAKI	7158-3112-70	12588069	02JN03	2.8mm CABLE SEAL (wire O.D. range 1.8mm-2.3mm)	N/A	N/A	N/A	YELLOW	NOT ACTIVE
32	YAZAKI	7158-3113-40	12582686	02JN03	2.8mm CABLE SEAL (wire O.D. range 2.1mm-3.0mm)	N/A	N/A	N/A	WHITE	AVAILABLE
33	YAZAKI	7158-3114-90	12674821	02JN03	2.8mm YESC CAVITY PLUG	N/A	N/A	N/A	BLUE	AVAILABLE
34	MOLEX	63825-8400	N/A	02JN03	MX64 TERM HAND CRIMP TOOL	N/A	N/A	N/A	N/A	AVAILABLE
35	MOLEX	63813-1400	XX019826	02JN03	MX64 TERM SERVICE TOOL	N/A	N/A	N/A	N/A	AVAILABLE
36	MOLEX	63902-5300	N/A	02JN03	MX64 CRIMP APPLICATOR with TOOL KIT 0.5/0.75mm2 PAYOFF DIRECTION D (left payoff) (contact Molex for payoff detail)	N/A	N/A	N/A	N/A	AVAILABLE
37	MOLEX	63902-5370	N/A	02JN03	MX64 APPLICATOR TOOL KIT 0.5/0.75mm2	N/A	N/A	N/A	N/A	AVAILABLE
38	MOLEX	63902-5100	N/A	02JN03	MX64 CRIMP APPLICATOR with TOOL KIT 0.35mm2 PAYOFF DIRECTION D (left payoff) (contact Molex for payoff detail)	N/A	N/A	N/A	N/A	AVAILABLE
39	MOLEX	63902-5170	N/A	02JN03	MX64 APPLICATOR TOOL KIT 0.35mm2	N/A	N/A	N/A	N/A	AVAILABLE
40	SPX	J35616-64	T.B.D.	02JN03	0.64mm PROBE TOOL (for rcpt)	N/A	N/A	N/A	N/A	AVAILABLE
41	SPX	J35616-64A	T.B.D.	02JN03	0.64mm PROBE TOOL WITH EXT (for rcpt)	N/A	N/A	N/A	N/A	AVAILABLE
42	SPX	J35616-65	T.B.D.	02JN03	0.64mm PROBE TOOL WITH EXT (for pin)	N/A	N/A	N/A	N/A	AVAILABLE
43	SPX	J35616-4A	T.B.D.	02JN03	2.8mm PROBE TOOL (for rcpt)	N/A	N/A	N/A	N/A	AVAILABLE
44	YAZAKI	X39899-J374	12094430	02JN03	2.8mm TERM SERVICE TOOL	N/A	N/A	N/A	N/A	AVAILABLE
45	TQI	7000-1006	N/A	15JN15	52 CKT PASS THROUGH ADAPTERS	N/A	N/A	N/A	BLACK	AVAILABLE
46	TQI	7000-1002	N/A	15JN15	66 CKT PASS THROUGH ADAPTERS	N/A	N/A	N/A	BLACK	AVAILABLE
47	TQI	79917-0061	N/A	15JN15	73 CKT PASS THROUGH ADAPTERS	N/A	N/A	N/A	BLACK	AVAILABLE
48	TQI	79917-0066	N/A	15JN15	80 CKT PASS THROUGH ADAPTERS	N/A	N/A	N/A	BLACK	AVAILABLE

* - MX123 DRESS COVER 52/66/73/80 CKT MATES TO ANY MX123 HARN CONN ASSY SHOWN ON TABLE ABOVE

NOTES: UNLESS OTHERWISE SPECIFIED

1. MATERIAL FOR INTERFACE:

A. RESIN:
   1. 30% G.F. PBT; 20% MAX. (BY WEIGHT) REGRIND.
   2. MATING CONNECTOR INTERFACE PART COLOR MUST BE SAME AS MATCHING KEYED HARNESS CONNECTOR ASSEMBLY.
   3. MUST BE VALIDATED FOR INDIVIDUAL DEVICE APPLICATION REQUIREMENTS.

B. 0.64MM PINS:
   1. BASE MATERIAL: COPPER ALLOY; CONDUCTIVITY >= 28% IACS AT 20°C; TENSILE STRENGTH >= 635 N/mm²;SURFACE ROUGHNESS R_a 6 MAX.
   2. PLATING FINISH: SILVER (Ag). PLATING TO BE 1.9-3.3 um ELECTRODEPOSITED SEMI-BRIGHT SILVER OVER 1.25-2.25 um DUCTILE SULPHAMATE NICKEL PER NOTE 1(D).
   3. ANTI-TARNISH: SYNTHETIC HYDROCARBON CONTACT SURFACE FINISH OR EQUIVALENT APPLIED WITHOUT VOID TO CONTACT AREA (MIN 3.7mm FROM PIN TIP).

C. 2.8MM BLADE:
   1. BASE MATERIAL: COPPER ALLOY; CONDUCTIVITY>= 28% IACS AT 20°C; TENSILE STRENGTH >= 350 N/mm²; SURFACE ROUGHNESS R_a 6 MAX.
   2. PLATING FINISH: TIN. PLATING TO BE 2.5-5.0 um ELECTRODEPOSITED TIN, MATTE FINISH OVER 1.25-2.5um DUCTILE SULPHAMATE NICKEL PER NOTE 1(D).

D. PLATING REQUIREMENTS:

1. SILVER PLATING
   a. 99.5% PURE SEMI-BRIGHT WITH NO ORGANIC BRIGHTNERS OR CHROMATES.

2. NICKEL PLATING
   a. ELECTRODEPOSITED DUCTILE SULFAMATE NICKEL WITH A NON-BRIGHTENED FINISH. NO ORGANIC OR BRIGHTENING AGENTS SHALL BE ALLOWED.
   b. SHALL ONLY BE USED AS AN UNDERLYING PLATING AND MAY NOT BE USED AS AN ELECTRICAL CONTACT SURFACE PLATING.
   c. SHALL BE NODULE FREE WHEN VIEWED AT 10X MAGNIFICATION IN MEASURED IN CONTACT SURFACE AREA PLUS 0.5MM PERIMETER AROUND THE CONTACT SURFACE AREA.
   d. ALL PLATINGS SHALL HAVE A 1.0% MAXIMUM BY WEIGHT IMPURITIES. IMPURITIES ARE DEFINED AS ALL ELEMENTS NOT THE PRIMARY PLATING OR HARDENING AGENT IF APPLICABLE, AS DETERMINED BY WET CHEMICAL ANALYSIS OR AUGER METHOD. NO SINGLE IMPURITY SHALL EXCEED 0.1% MAXIMUM BY WEIGHT.

3. TESTING
   a. THICKNESS TO BE MEASURED IN CONTACT SURFACE AREA PLUS 0.5MM PERIMETER AROUND THE CONTACT SURFACE AREA AS DESIGNATED IN THE DRAWING. THICKNESS SHALL BE DETERMINED BY METHOD OF X-RAY (XRF).
   b. PLATING ADHESION SHALL BE TESTED BY A BEND TEST FOR ALL METALS. THE TEST SAMPLE SHALL BE BENT 90 DEGREES TO DETERMINE DEPOSIT ADHESION. TESTING SHALL BE COMPLETED IN ACCORDANCE WITH ASTM SPEC B571.

2. DESIGN - GENERAL:

A. THIS IS A 100% CAD GENERATED PART. THE CAD MATHEMATICAL DATA IS THE MASTER FOR THIS PART. FOR DIMENSIONAL OR ANY INFORMATION NOT SHOWN ON THIS DRAWING, ANALYZE THE CAD MODEL.
B. TOLERANCES:
   1. LINEAR 0.X ± 0.30
              0.XX ± 0.10
              0.XXX ± 0.10
   2. ANGULAR X° ± 3°
   3. ⌓ | 1.0 | A | B | C
C. MINIMUM WALL THICKNESS REQUIRED: 1.3mm.
D. CORNERS SHOWN AS SHARP TO BE R 0.2 MAX.
E. LETTERING SHALL BE 0.15 MAX RAISED IN 0.20 MAX RECESS PAD. THIS INCLUDES MATERIAL CODE, RECYCLING CODE, CAVITY ID AND DATE CODE.
F-1. PARTS MUST BE FREE OF DISCOLORATION, SALT RESIDUE AND OTHER IMPERFECTIONS THAT AFFECT FIT OR FUNCTION.
F-2. SCRATCHES OR DENTS NOT TO EXCEED 0.013mm IN DEPTH.
G. FOLLOWING PRODUCTION CODES TO BE PERMANENTLY MARKED & HUMAN READABLE TO A LETTER HEIGHT OF 1.5 ±0.5MM X 0.3 MAX DEEP
   1. MATERIAL #: XXXXX-XXXX
   2. DATE CODE: JJJY (JULIAN DAY, LAST DIGIT OF YEAR)
   3. INSPECTION MACHINE CODE + SERIAL #: X_XXXXX

3. DESIGN - MANUFACTURING:

A. DRAFT TO BE WITHIN TOLERANCE.
B. ALLOWABLE FLASH MAX 0.2 HIGH X MAX 0.13 THICK.
C. ALLOWABLE PARTING LINE MISMATCH 0.2 MAX.
D. EJECTOR PINS MARK TO BE FLUSH TO 0.25 MAX DEPRESSED.
E. ALLOWABLE GATE VESTIGE FLUSH TO 0.25 MAX PROTRUSION.
F. NO EXTERNAL MOLD RELEASE AGENT ALLOWED DURING MANUFACTURING.
G. STEEL THAT FORMS THE INDICATED SURFACE MUST BE POLISHED WITH A DIAMOND FINISH (SPI A-2) OVER THE FULL PERIPHERY OF THE TOOL. SURFACE MUST HAVE NO MISMATCH.
H. ANY PROCESS LUBRICANT REMAINING ON THE TERMINAL MUST NOT VARNISH OR DEGRADE IT'S ELECTRICAL PERFORMANCE UP TO A MAXIMUM CLASS AMBIENT TEMPERATURE PER SAE USCAR-2 FOR 1008 HOURS. PROCESS LUBRICANTS SHOULD BE APPROVED BY THE RESPONSIBLE ENGINEER.
J. OPTIONAL FEATURES PROVIDED FOR AUTOMATION.
K. PART MUST BE FREE FROM BURRS AND SHARP EDGES, WHICH MIGHT BE DETRIMENTAL TO SATISFACTORY ASSEMBLY, SAFE HANDLING OR FUNCTION OF PART.
L. PARTS AS DELIVERED TO ASSEMBLY SHALL BE CLEAN AND FREE OF DEBRIS, RESIDUAL ABRASIVE MATERIAL AND CORROSION PRODUCTS ADVERESLY AFFECTING FUNCTION OR APPEARENCE.
M. RESTRICTED AND REPORTABLE SUBSTANCES FOR PARTS PER GMW3059.

NOTES: UNLESS OTHERWISE SPECIFIED

4. SYSTEM REQUIREMENTS:

   A. HARNESS CONNECTOR IS COMPATIBLE WITH THE FOLLOWING ISO WIRE SIZE NO'S:
      0.35mm2, MEETING GMW15626 - MIN OD OF 1.30MM
      0.50mm2, MEETING GMW15626
      0.75mm2, MEETING GMW15626 - MAX OD OF 2.06MM

   B. CABLE TIE SPECIFICATIONS:
      1. CABLE TIE:
         TENSILE RATING: 220N / (50lbs) MIN
         TIE LENGTH: 186mm MIN
         TIE WIDTH: 4.75mm MAX
         MATERIAL: NYLON
      2. INSTALLATION:
         CABLE TIE TENSION: 190N MIN
      3. DRESSED WIRE BUNDLE PACKAGING: SEE FIG. 1

   C. WHEN MATED WITH COMPONENT CONNECTOR INTERFACE AND/OR DRESS COVER, HARNESS CONNECTOR SYSTEM CONFORMS TO THE FOLLOWING:
      1. SAE/USCAR-2, REV: 3 APRIL, 2001; CLASS 3
      2. FIELD CORRELATED LIFE TEST, SAE/USCAR-20, NOV. 2001
      3. GMW #3191 AUGUST 22, 2000 (DRAFT); TEMPERATURE CLASS 3, SEALING CLASS 1, VIBRATION CLASS 2
      4. RESTRICTED AND REPORTABLE CHEMICALS PER GMW #3059, REV: D AUGUST 2002
      5. TPA USER FORCES (FULLY POPULATED WITH TERMINALS)
         a. REMOVAL FROM LOCK TO PRE-SET: <=120N

   D. WIRE SPECIFICATIONS:
      1. WIRE SURFACE MUST BE FREE OF SCRATCHES, GROOVES OR DENTS WHERE FUNCTIONAL

5. TERMINAL CURRENT RATINGS:

   A. MX64 RCPT TERM
      ALL TESTING DONE IN ACCORDANCE WITH USCAR-2 REV5 SECTION 5.3

      1. MX64 RCPT TERM Ag 0.50/0.75mm2 CRIMPED TO 0.75mm2 ISO WIRE AND MATED TO MX123 0.64MM PIN: SEE TABLE BELOW
      2. MX64 RCPT TERM Ag 0.35mm2 CRIMPED TO 0.35mm2 ISO WIRE AND MATED TO MX123 0.64MM PIN: SEE TABLE BELOW

WIRE	CURRENT RATING			
	23'C	85'C	105'C	125'C
0.75mm2	11.3A	11.3A	9.5A	6.6A
0.50mm2	10.0A	10.0A	8.3A	5.7A
0.35mm2	8.5A	8.5A	7.1A	5.0A

   B. 2.8MM RCPT TERM
      ALL TESTING DONE IN ACCORDANCE WITH MOLEX DVP&R 0279 (TR # 7125)

      1. 2.8MM RCPT TERM TIN 2.0mm2 CRIMPED TO 2.0mm2 ISO WIRE AND MATED TO MX123 2.8MM BLADE: 25.6 AMPS AT 125° C

6. CONTACT MOLEX AUTOMOTIVE FOR AVAILABLE CUSTOM PATTERNS OF CAVITIES OPEN FOR CIRCUITS - SEE GM DRAWING 13507496

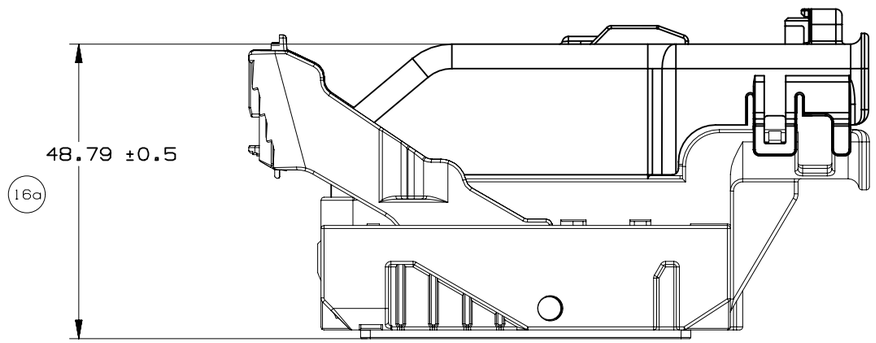

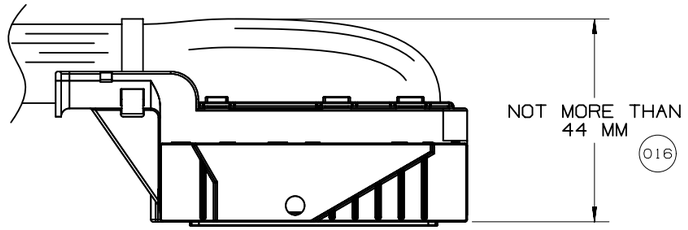

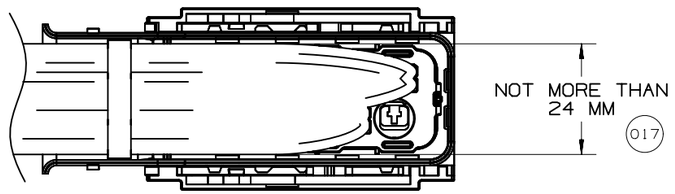

Fig. 1

	GM	PAGE TITLE WIRE DRESS PACKAGING DIMENSIONS		DRAWING NUMBER 12672833	DWG STATUS ST: R / REV: 001 / PDI:		PAGE NUMBER 8 OF 22

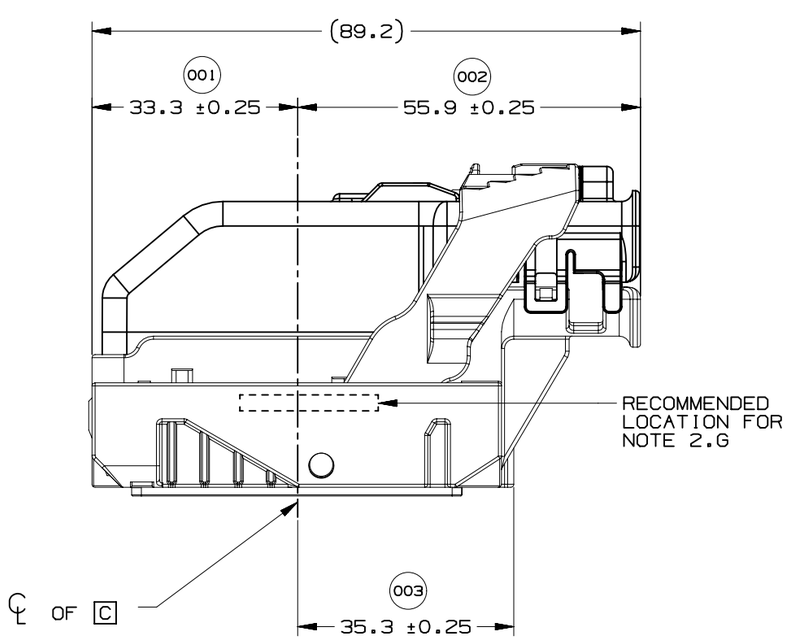

WIRE DRESS OPTION 0 SHOWN

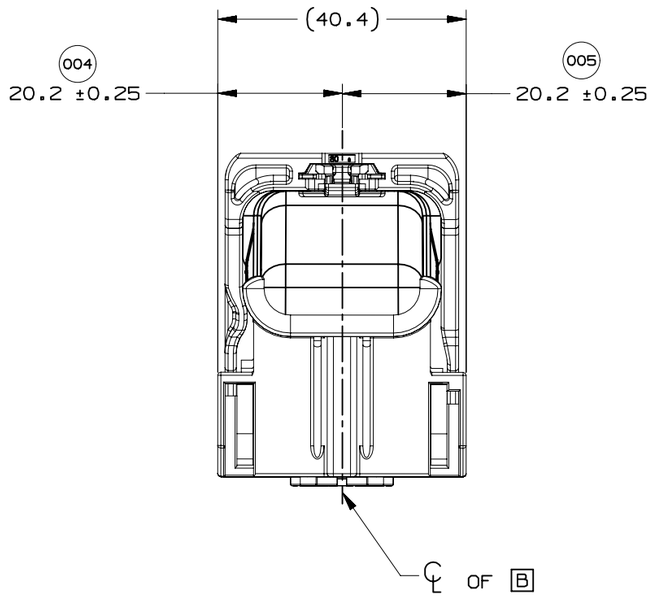

WIRE DRESS OPTION 0 SHOWN

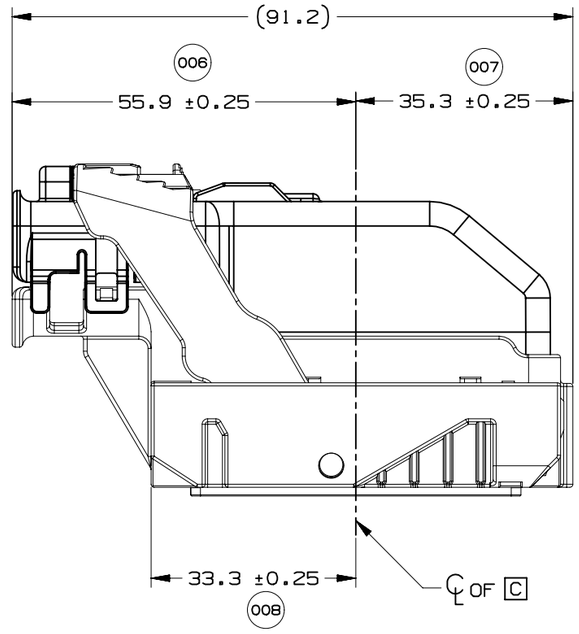

WIRE DRESS OPTION 9 SHOWN

	GM	PAGE TITLE LOCATION AND PACKAGING DIMENSIONS REFERENCING INTERFACE DATUMS B & C		DRAWING NUMBER 12672833	DWG STATUS ST: R / REV: 001 / PDI:		PAGE NUMBER 9 OF 22

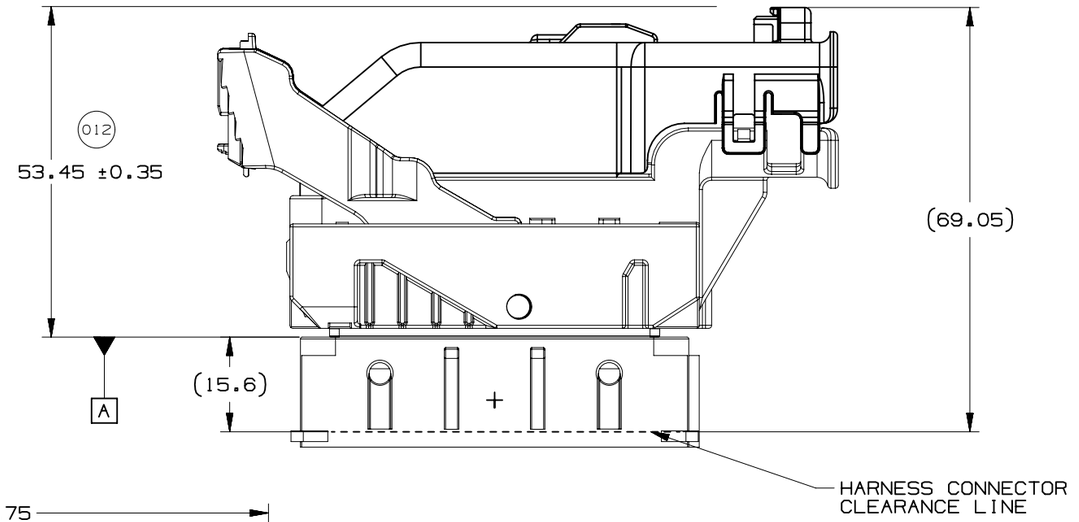

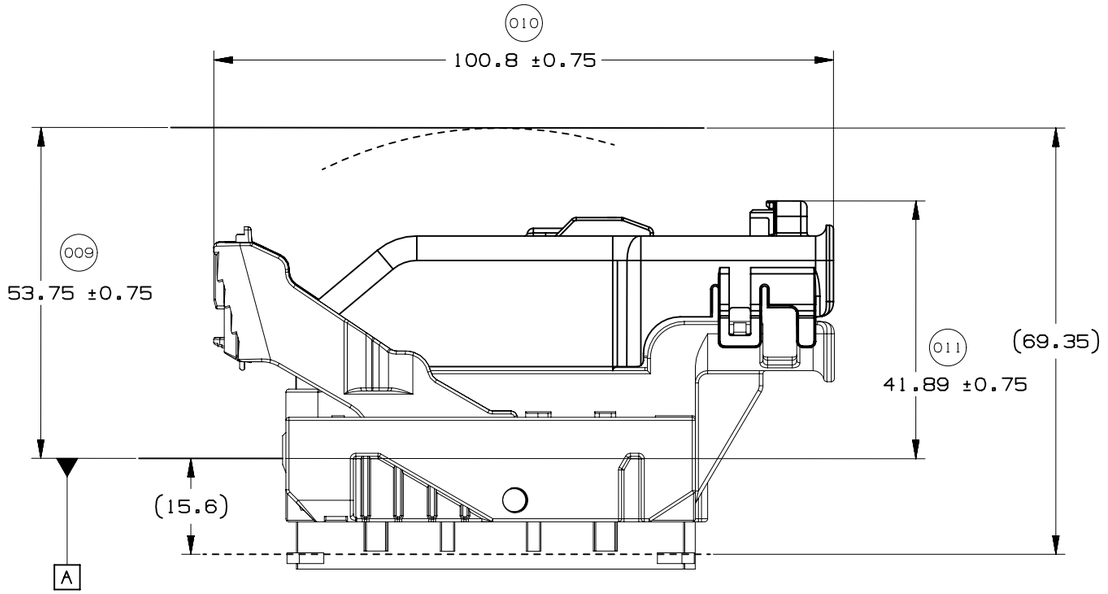

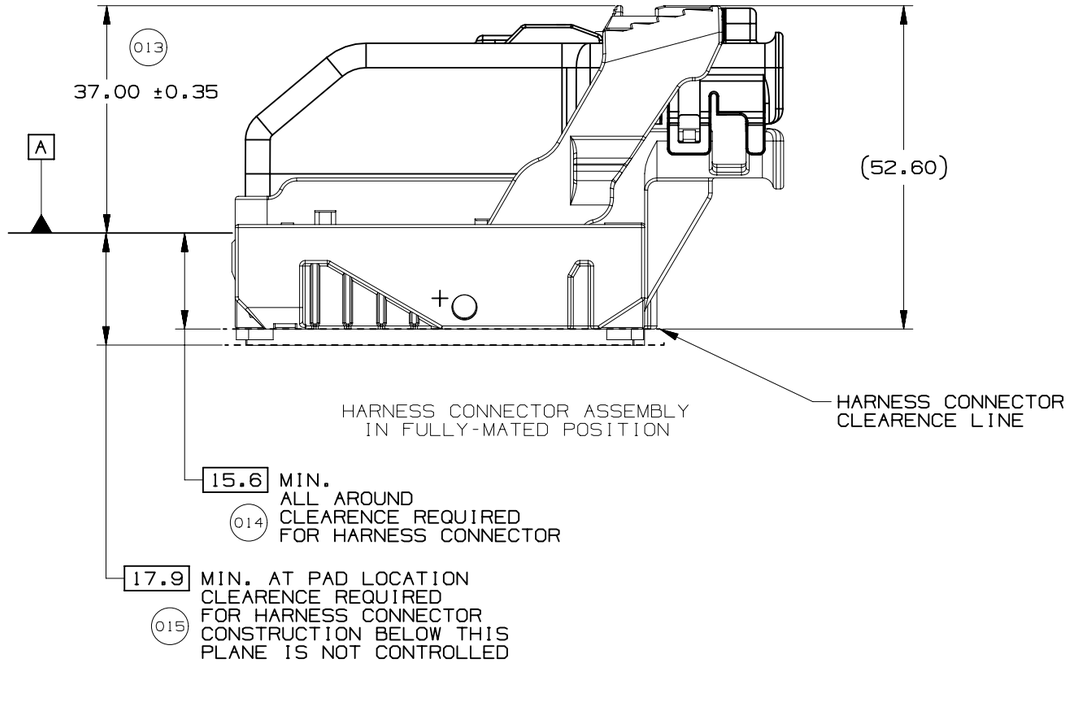

	GM	PAGE TITLE LOCATION AND PACKAGING DIMENSIONS REFERENCING INTERFACE DATUM A		DRAWING NUMBER 12672833	DWG STATUS ST: R / REV: 001 / PDI:	PAGE NUMBER 10 OF 22

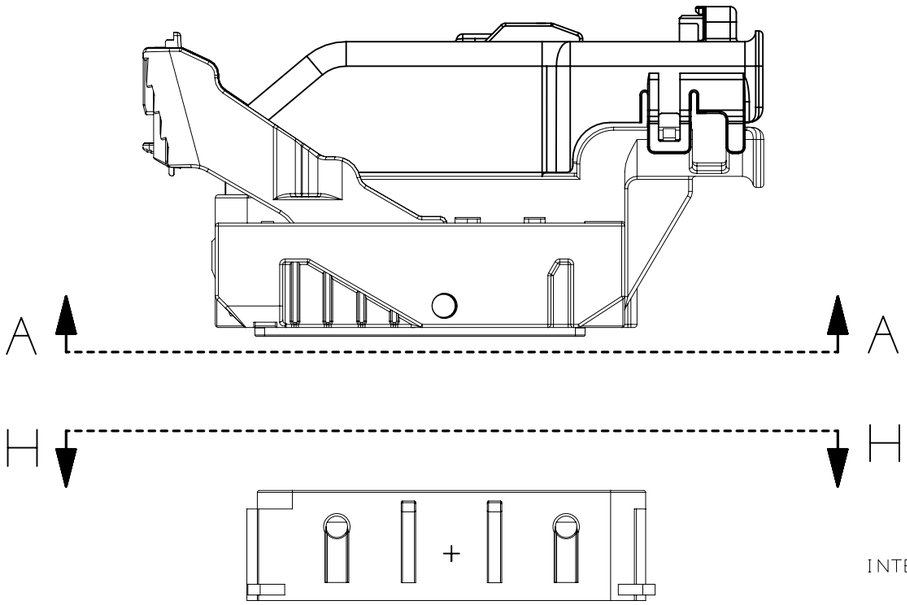

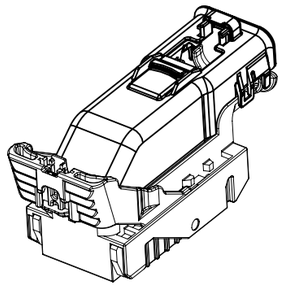

NOTE: REFERENCE THE COMPONENT TABLE
FOR KEY OPTIONS AND CONFIGURATIONS

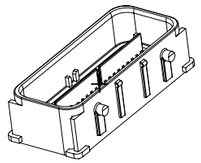

INTERFACE SIDE SHOWN ON ALL SECTION VIEWS

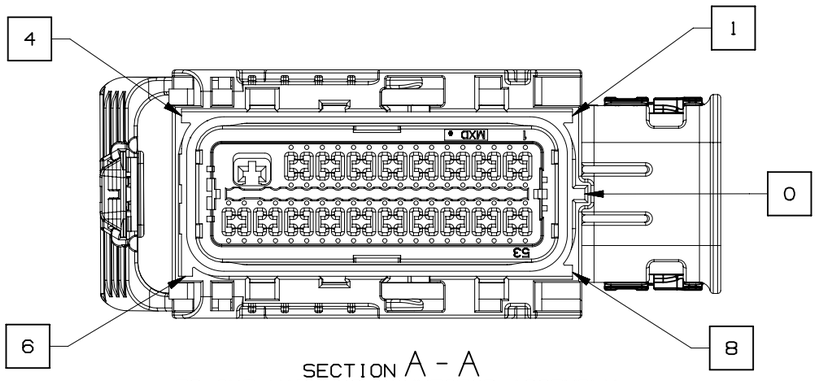

SECTION A - A
73 CKT HARNESS CONNECTOR ASSEMBLY
KEY OPTION B SHOWN

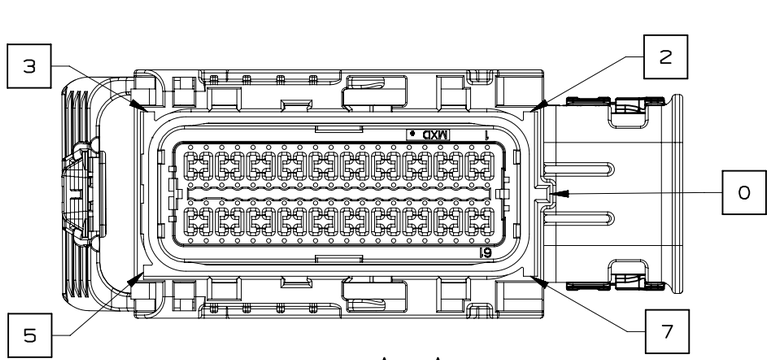

SECTION A - A
80 CKT HARNESS CONNECTOR ASSEMBLY
KEY OPTION K SHOWN

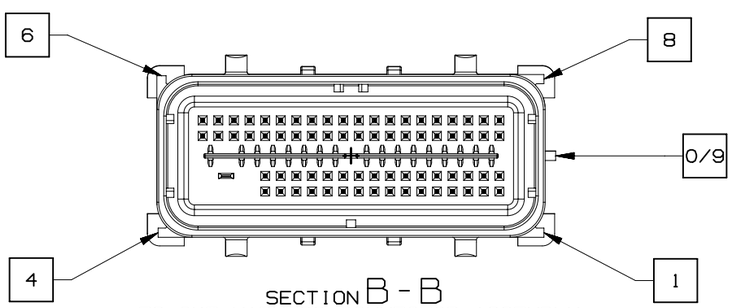

SECTION B - B
73 CKT HARNESS CONNECTOR ASSEMBLY
KEY OPTION B SHOWN

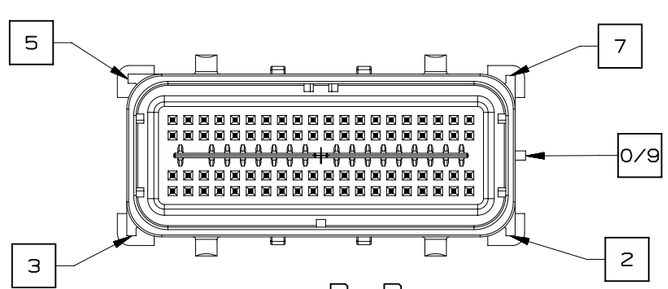

SECTION B - B
80 CKT HARNESS CONNECTOR ASSEMBLY
KEY OPTION K SHOWN

	GM	PAGE TITLE: KEY ID REF - WIRE DRESS OPTION 0		DRAWING NUMBER: 12672833	DWG STATUS: ST R / REV 001 / PDI		PAGE NUMBER: 11 OF 22

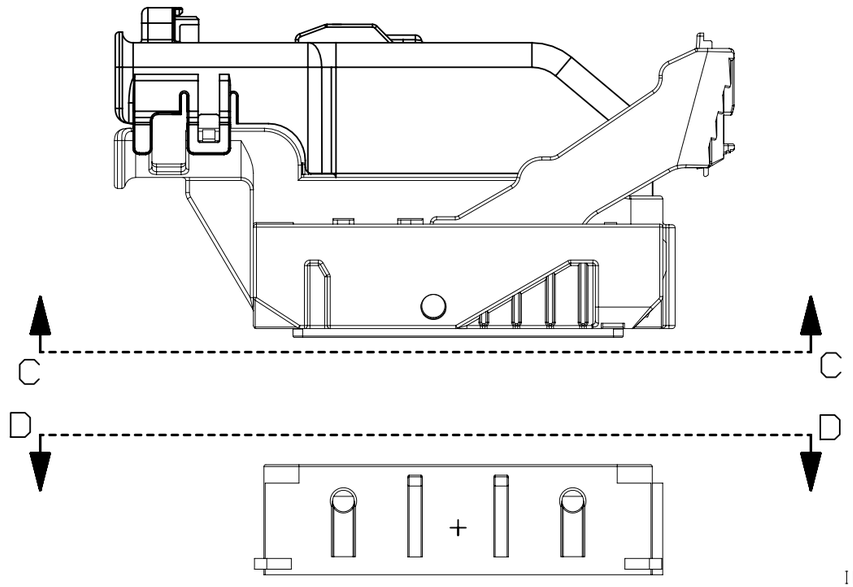

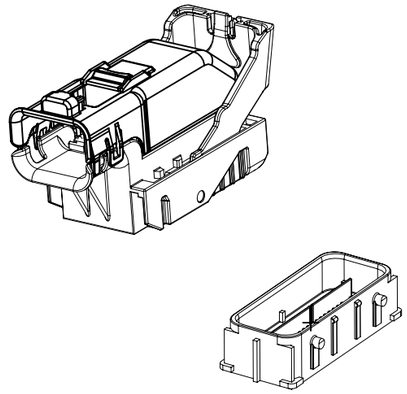

NOTE: REFERENCE THE COMPONENT TABLE FOR KEY OPTIONS AND CONFIGURATIONS

INTERFACE SIDE SHOWN ON ALL SECTION VIEWS

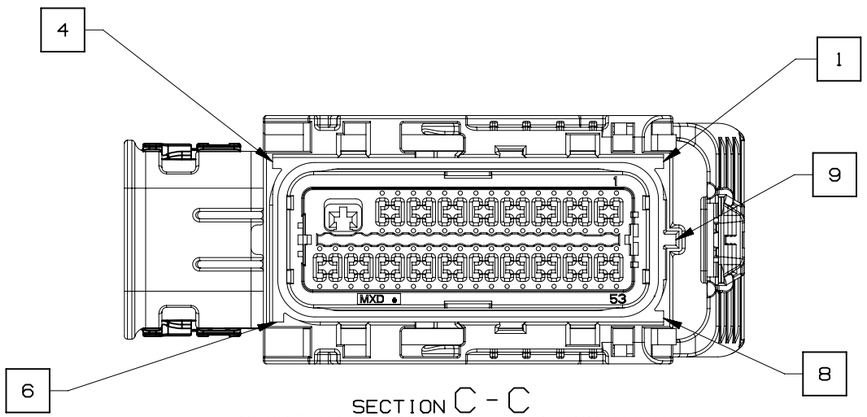

SECTION C - C
73 CKT HARNESS CONNECTOR ASSEMBLY
KEY OPTION B SHOWN

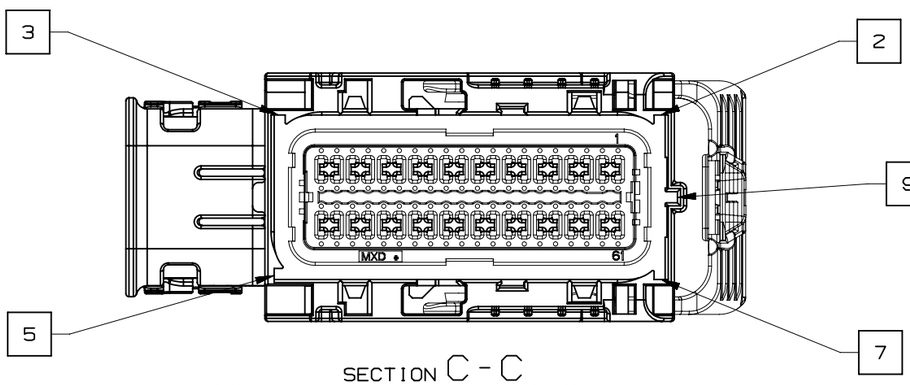

SECTION C - C
80 CKT HARNESS CONNECTOR ASSEMBLY
KEY OPTION K SHOWN

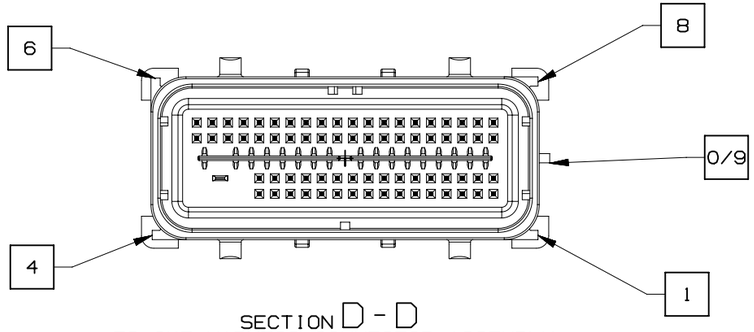

SECTION D - D
73 CKT HARNESS CONNECTOR ASSEMBLY
KEY OPTION B SHOWN

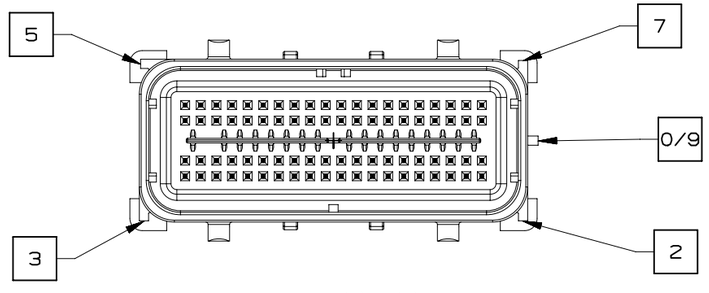

SECTION D - D
80 CKT HARNESS CONNECTOR ASSEMBLY
KEY OPTION K SHOWN

	GM	PAGE TITLE: KEY ID REF - WIRE DRESS OPTION 9		DRAWING NUMBER: 12672833	DWG STATUS: ST R / REV 001 / PDI		PAGE NUMBER: 12 OF 22

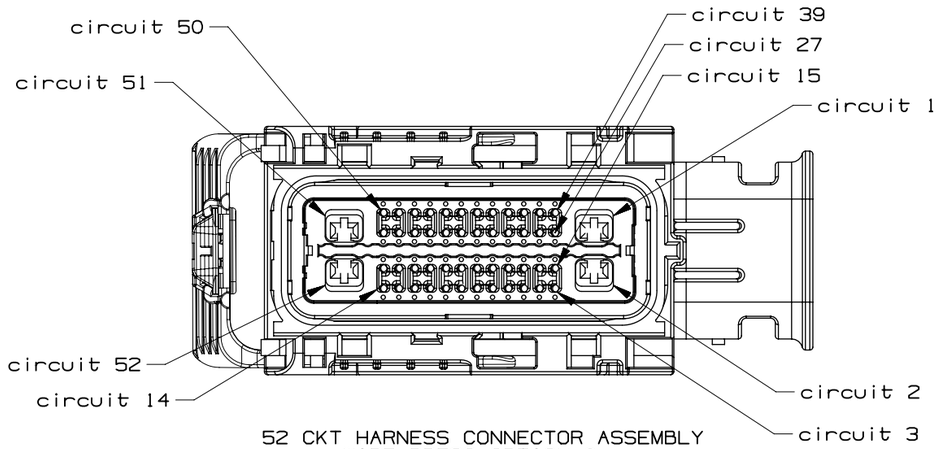

52 CKT HARNESS CONNECTOR ASSEMBLY
WIRE DRESS OPTION 0

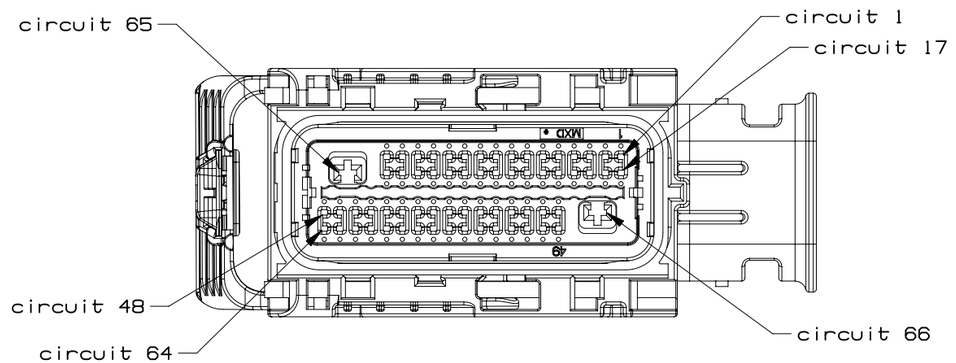

66 CKT HARNESS CONNECTOR ASSEMBLY
WIRE DRESS OPTION 0

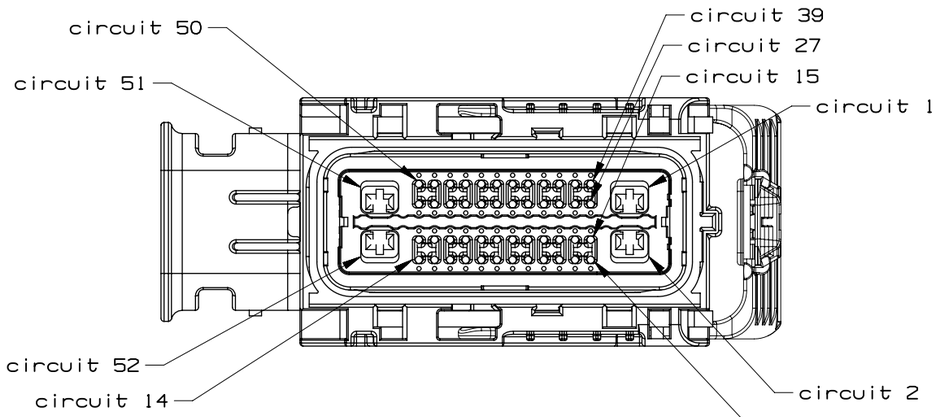

52 CKT HARNESS CONNECTOR ASSEMBLY
WIRE DRESS OPTION 9

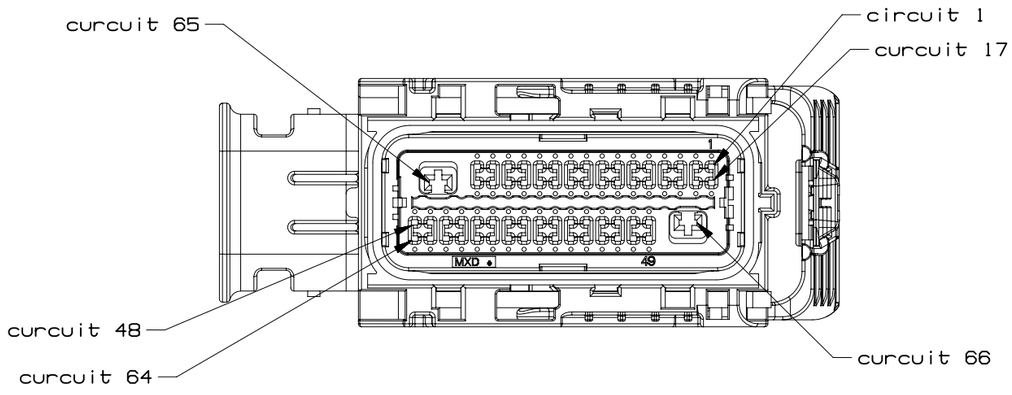

66 CKT HARNESS CONNECTOR ASSEMBLY
WIRE DRESS OPTION 9

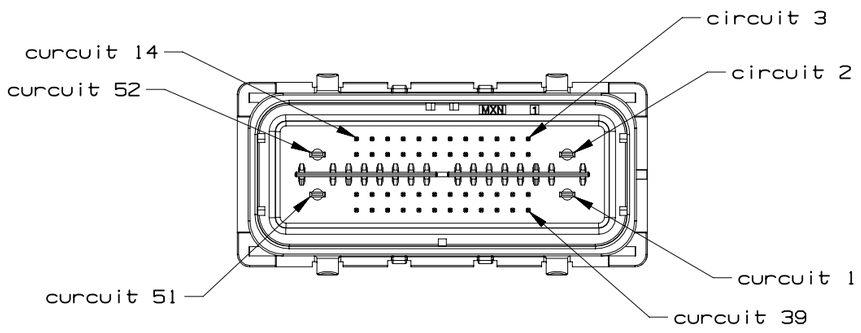

52 CKT COMPONENT CONNECTOR INTERFACE

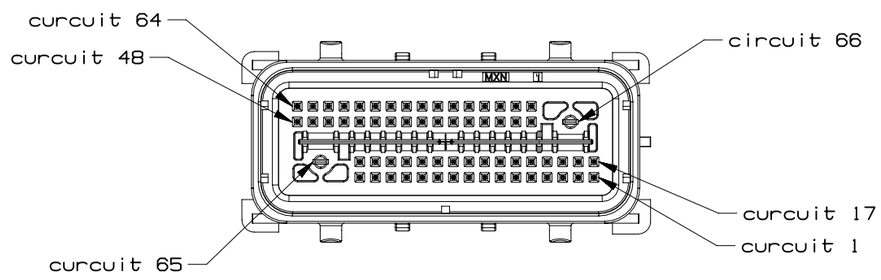

66 CKT COMPONENT CONNECTOR INTERFACE

	GM	PAGE TITLE CIRCUIT CONFIGURATIONS		DRAWING NUMBER 12672833	DWG STATUS ST: R / REV: 001 / PDI:		PAGE NUMBER 13 OF 22

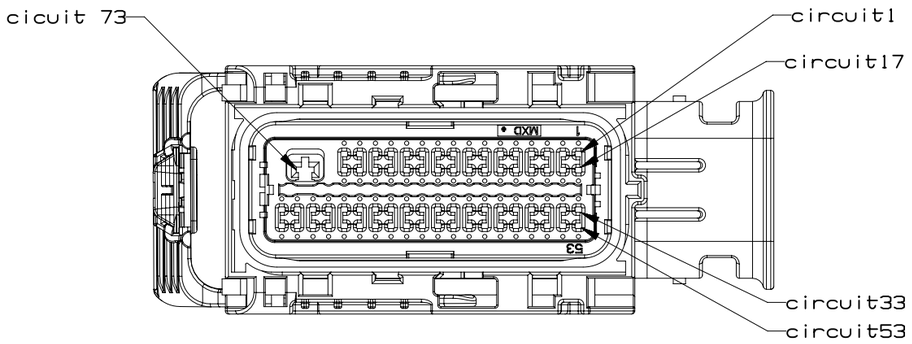

73 CKT HARNESS CONNECTOR ASSEMBLY
WIRE DRESS OPTION 0

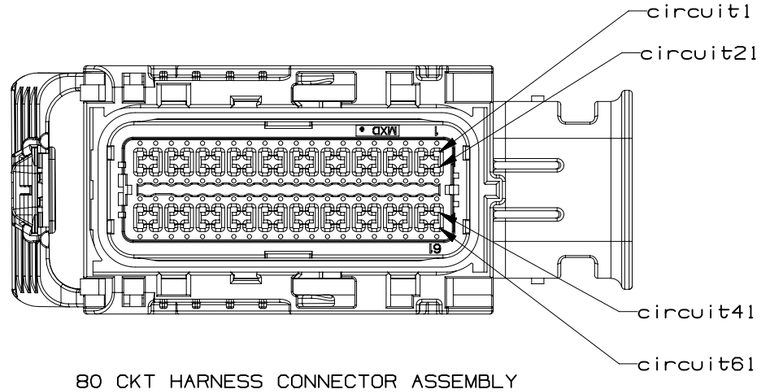

80 CKT HARNESS CONNECTOR ASSEMBLY
WIRE DRESS OPTION 0

INTERFACE SIDE SHOWN ON ALL VIEWS

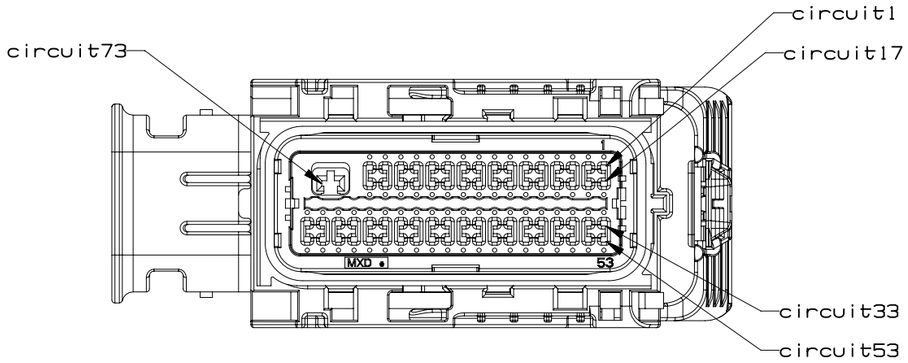

73 CKT HARNESS CONNECTOR ASSEMBLY
WIRE DRESS OPTION 9

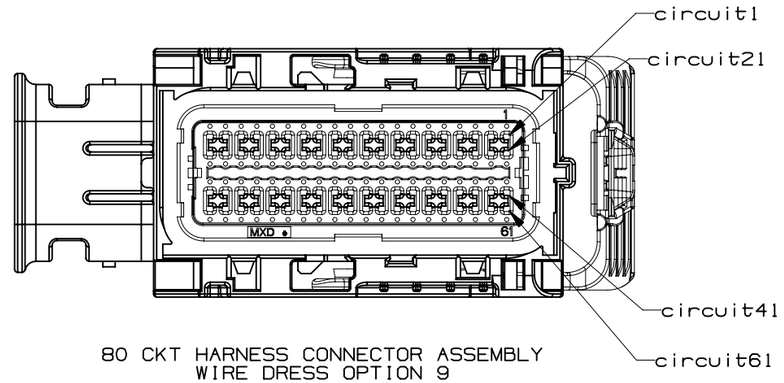

80 CKT HARNESS CONNECTOR ASSEMBLY
WIRE DRESS OPTION 9

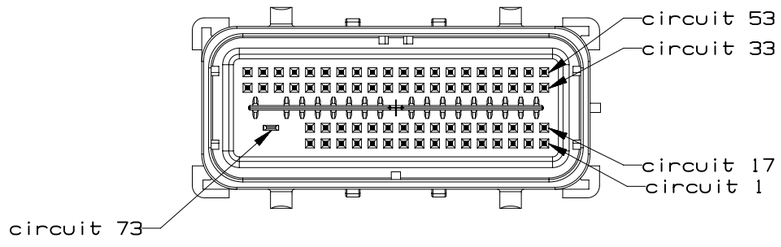

73 CKT COMPONENT CONNECTOR INTERFACE

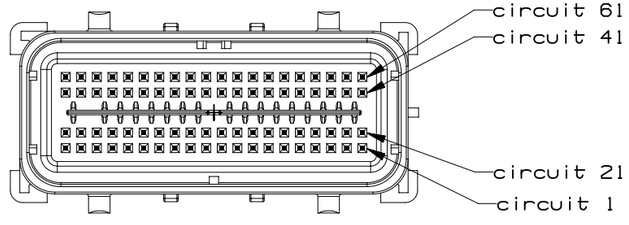

80 CKT COMPONENT CONNECTOR INTERFACE

	GM	PAGE TITLE: CIRCUIT CONFIGURATIONS		DRAWING NUMBER: 12672833	DWG STATUS ST: R	REV: 001	PDI:	PAGE NUMBER: 14 OF 22

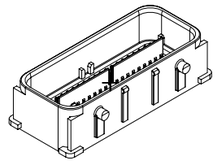

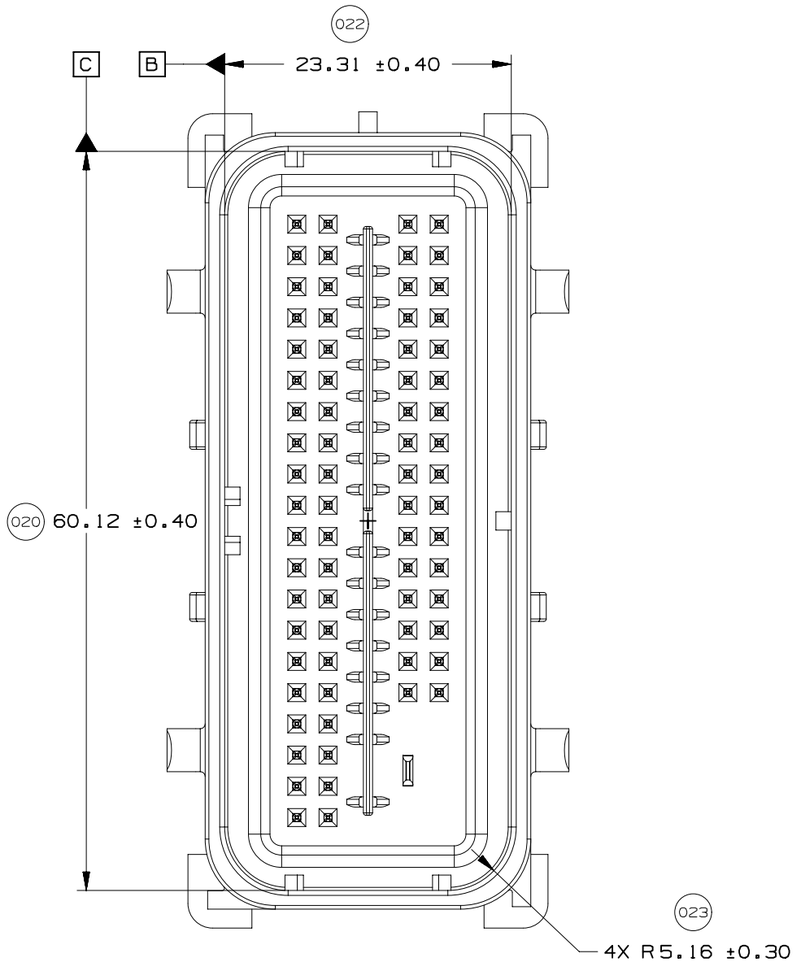

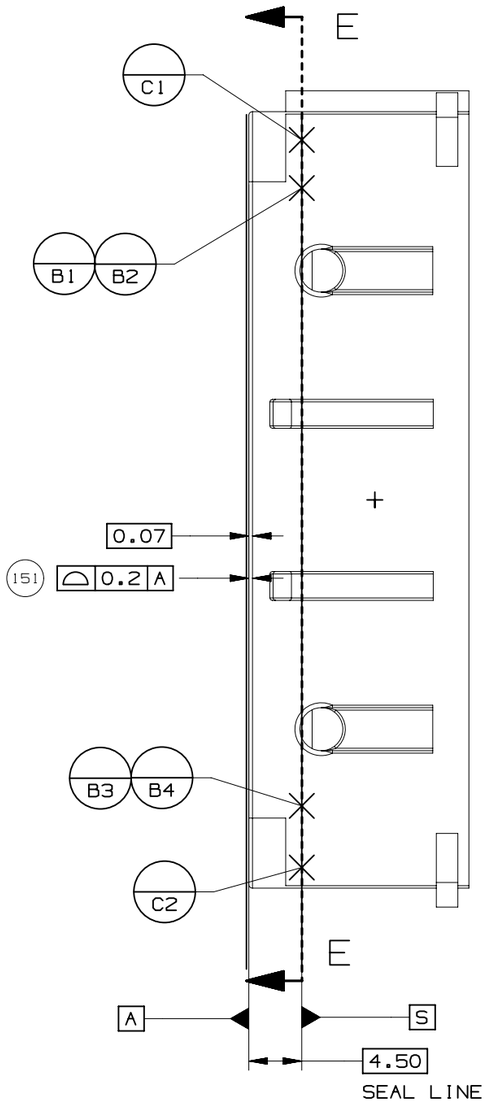

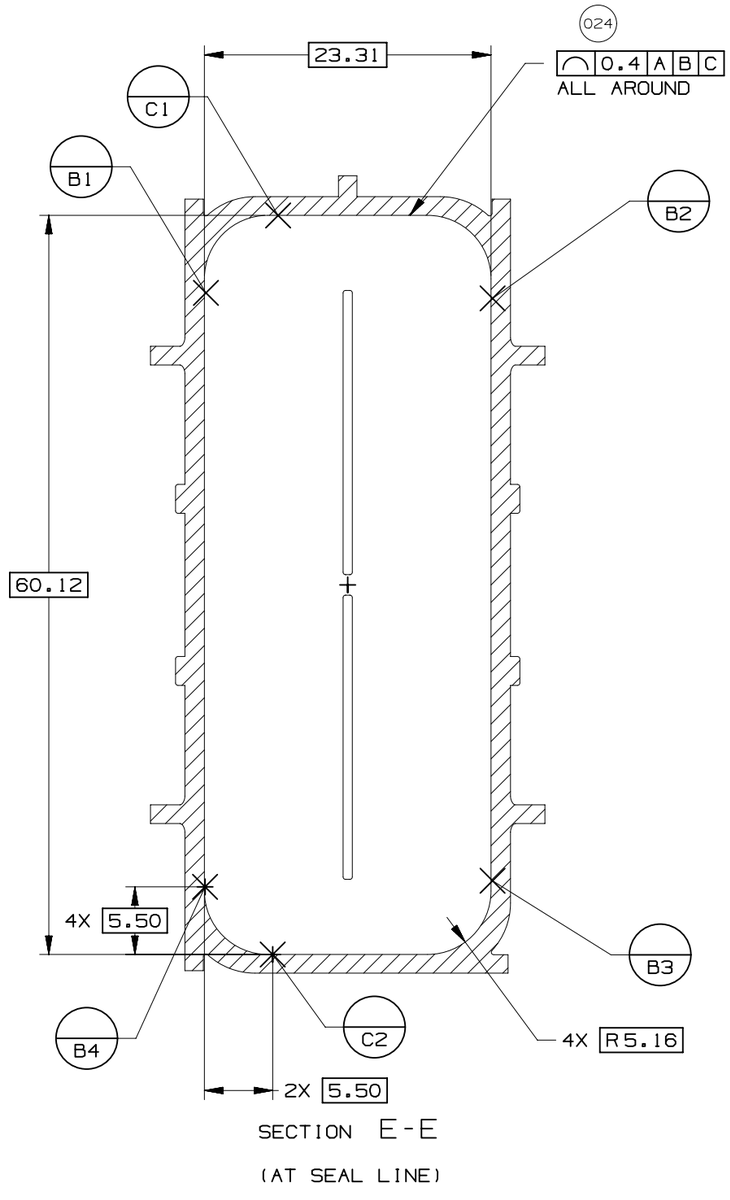

UNLESS SPECIFIED, TOLERANCE OF THE COMPONENT CONNECTOR INTERFACE TO BE 0.13 A B C

	GM	PAGE TITLE: COMPONENT CONNECTOR INTERFACE		DRAWING NUMBER: 12672833	DWG STATUS ST: R	REV: 001	PDI:	PAGE NUMBER: 15 OF 22

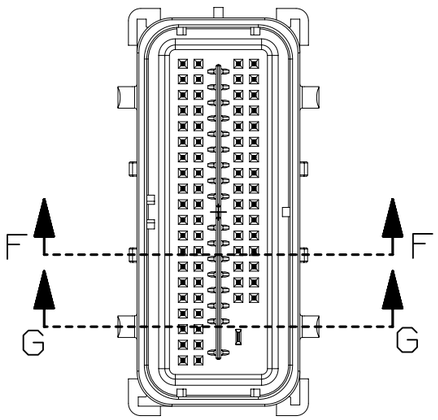

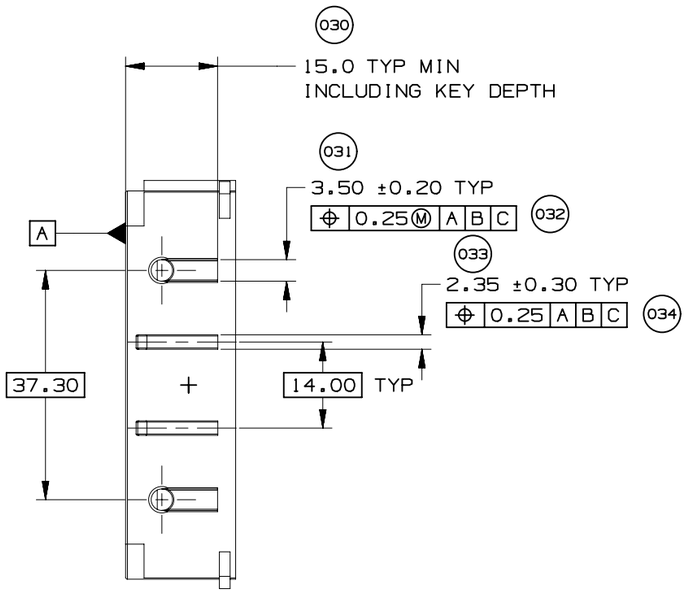

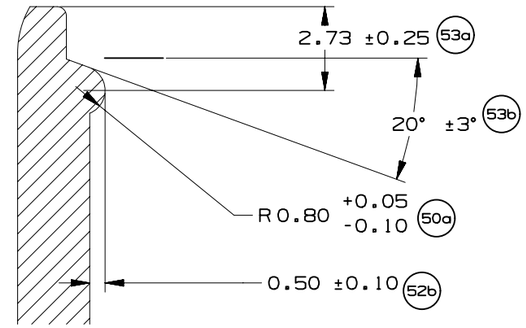

VIEW YY
SCALE 5:1

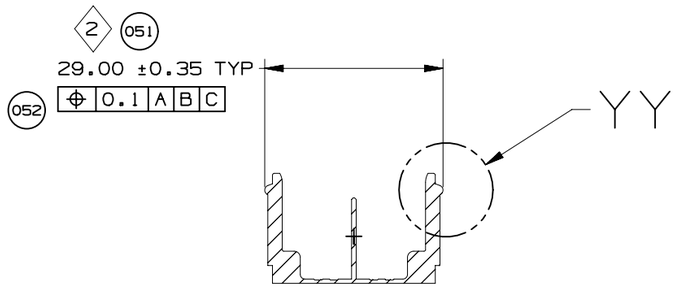

SECTION F-F
(RELEASE FEATURE)

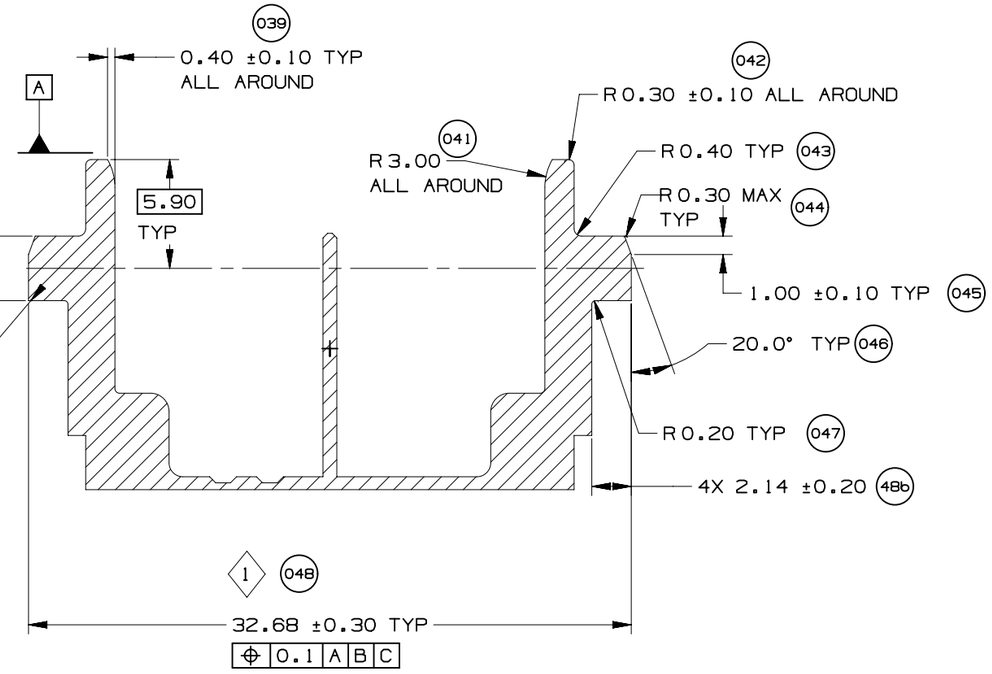

SECTION G-G
(CAM POST)

	GM	PAGE TITLE COMPONENT CONNECTOR INTERFACE		DRAWING NUMBER 12672833	DWG STATUS ST: R / REV: 001 / PDI:	PAGE NUMBER 16 OF 22	

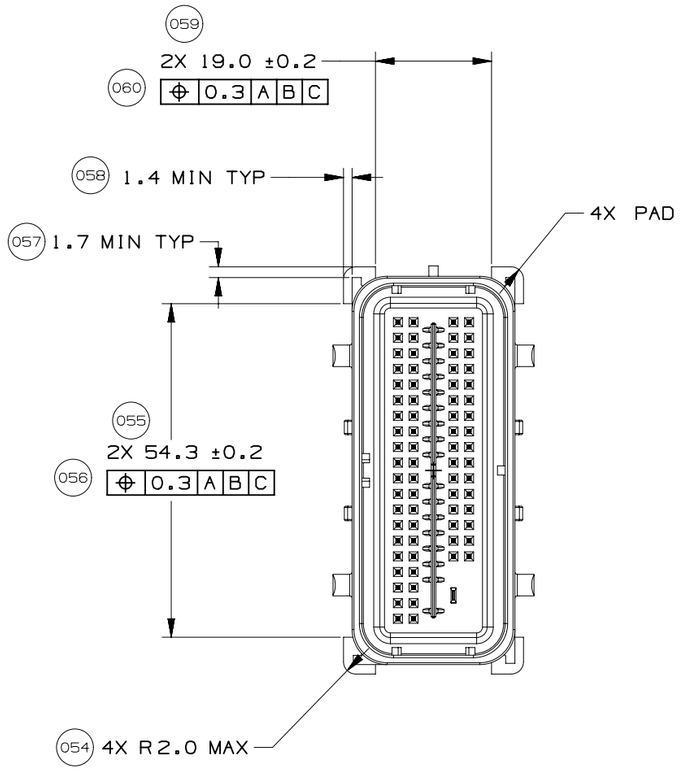

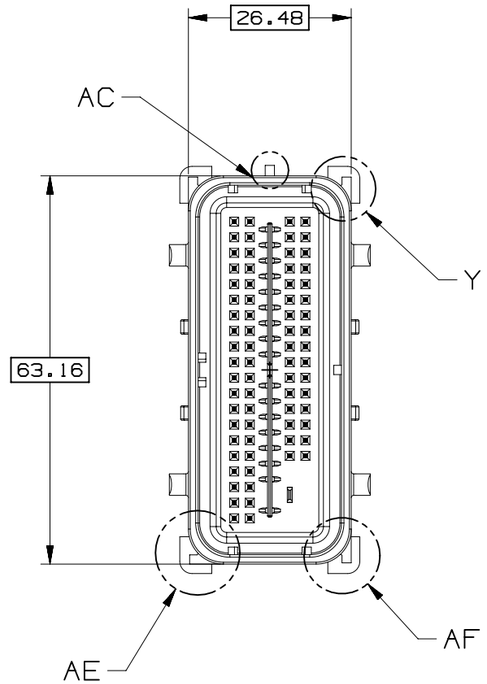

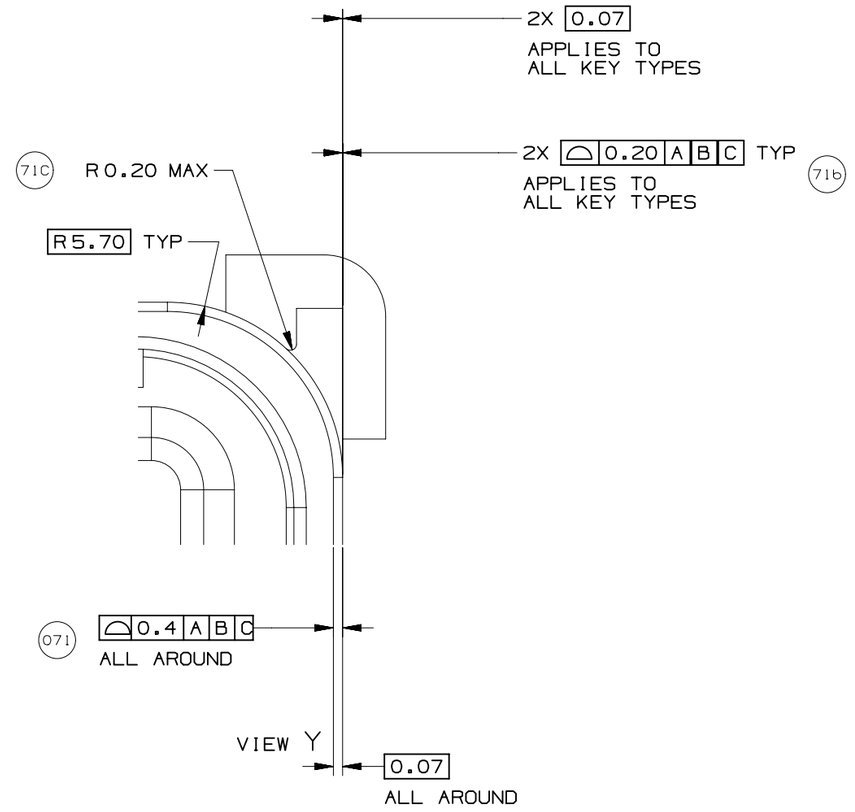

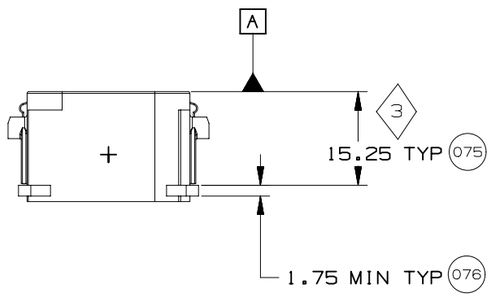

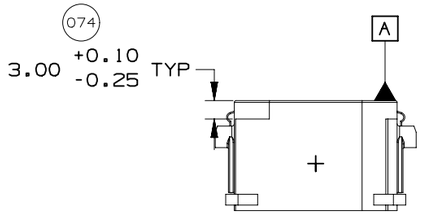

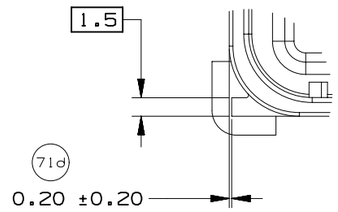

VIEW AE
KEY TYPE 2
SCALE 2:1

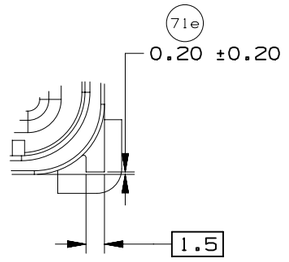

VIEW AF
KEY TYPE 1
SCALE 2:1

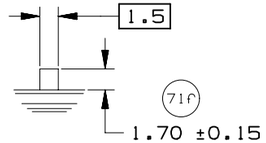

VIEW AC
KEY TYPE 3
SCALE 2:1

GM	PAGE TITLE: COMPONENT CONNECTOR INTERFACE		DRAWING NUMBER: 12672833	DWG STATUS ST: R	REV: 001	PDI:	PAGE NUMBER: 17 OF 22

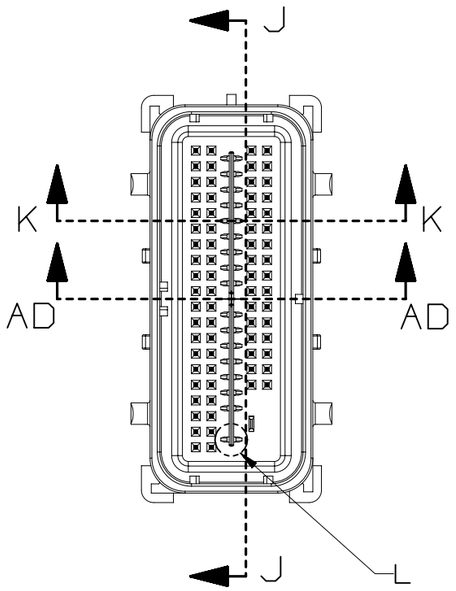

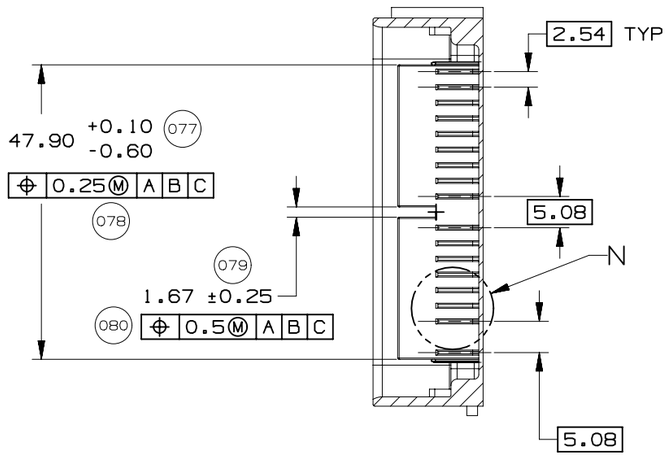

SECTION J-J

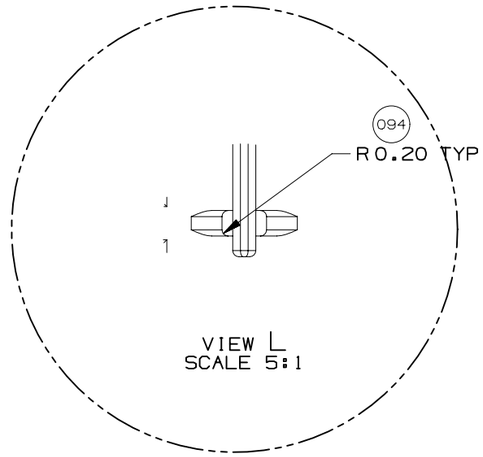

VIEW L
SCALE 5:1

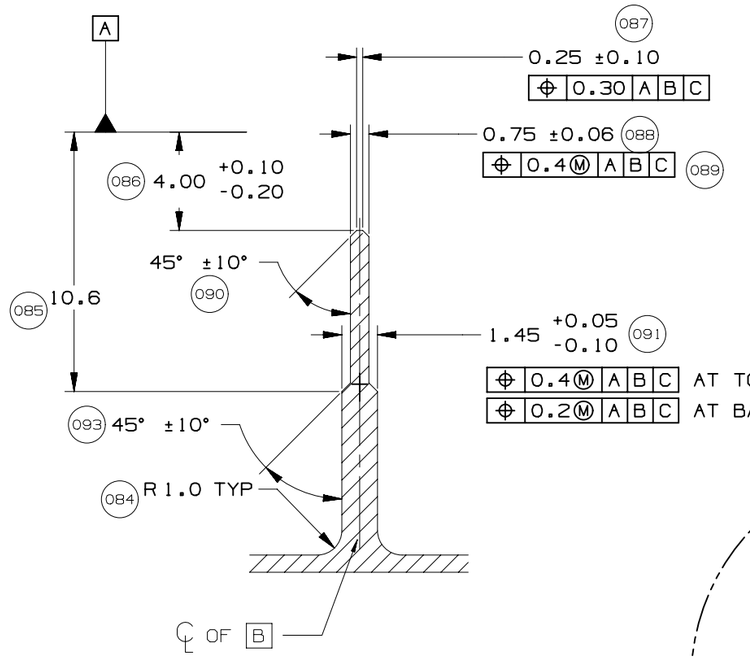

DETAIL M
TYPICAL
SCALE 4:1

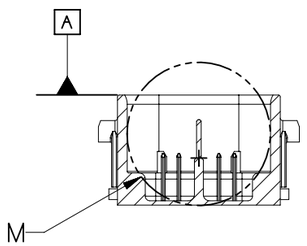

SECTION K-K

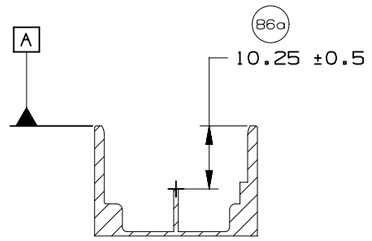

SECTION AD-AD

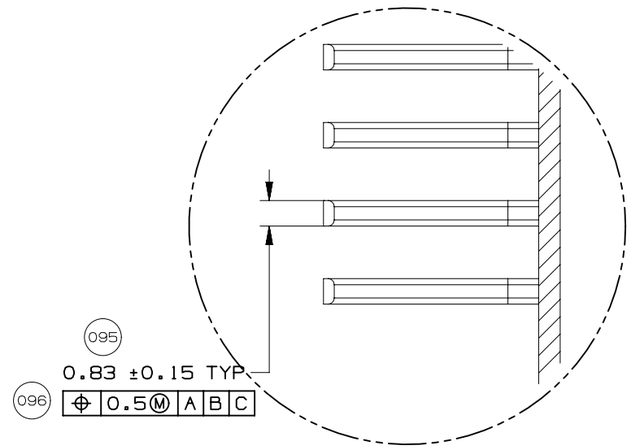

DETAIL N
SCALE 5:1

	GM	PAGE TITLE: COMPONENT CONNECTOR INTERFACE		DRAWING NUMBER: 12672833	DWG STATUS: ST R / REV 001 / PDI	PAGE NUMBER: 18 OF 22

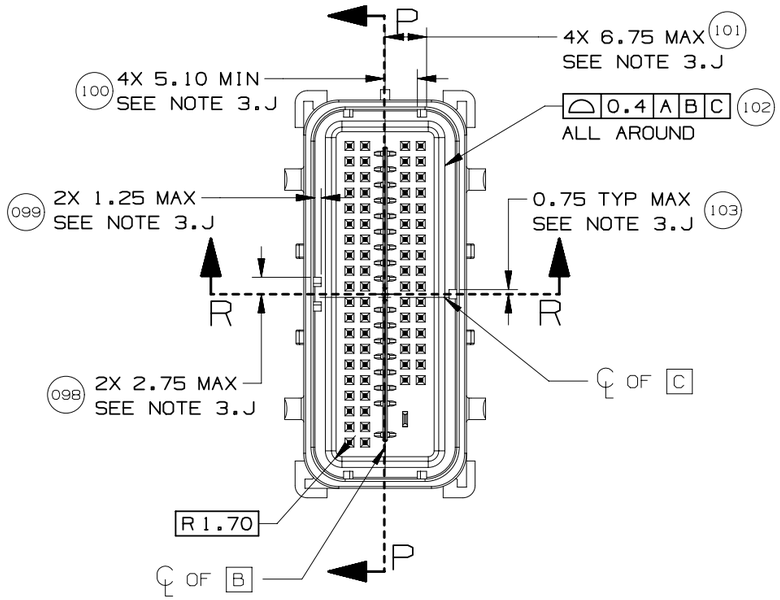

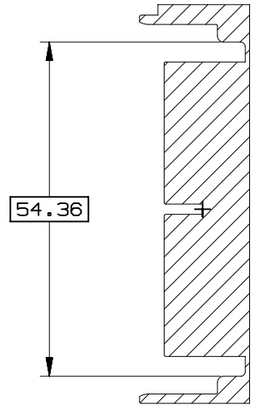

SECTION P-P

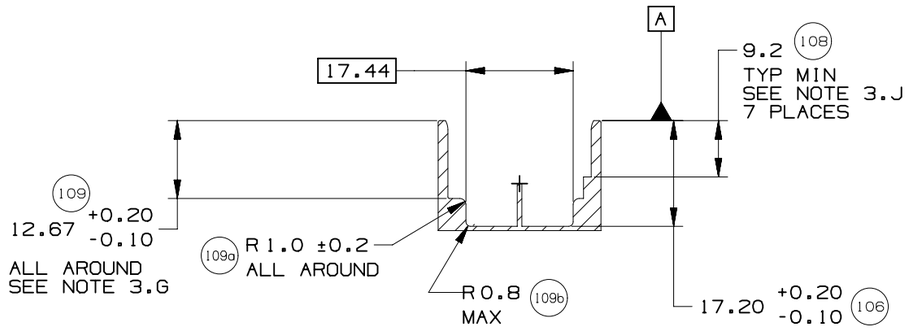

SECTION R-R

	GM	PAGE TITLE COMPONENT CONNECTOR INTERFACE		DRAWING NUMBER 12672833	DWG STATUS ST: R / REV: 001 / PDI:	PAGE NUMBER 19 OF 22	

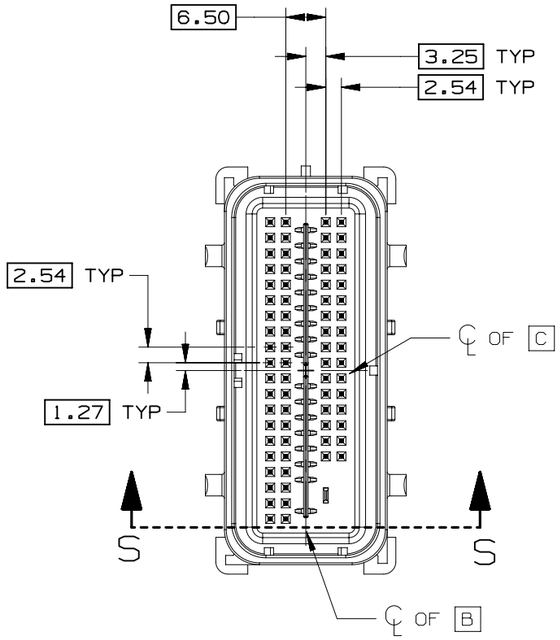

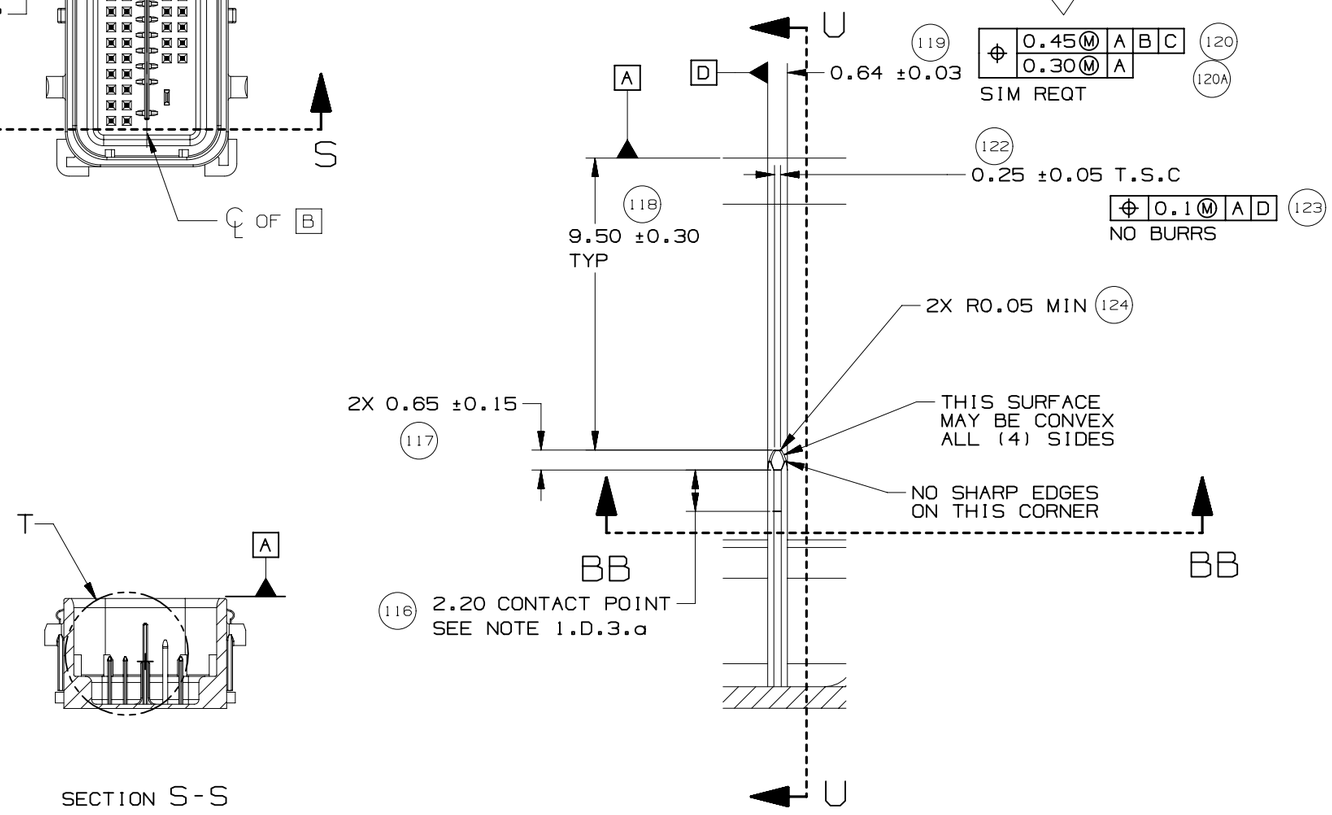

SECTION S-S

DETAIL T
TYPICAL
SCALE 5:1

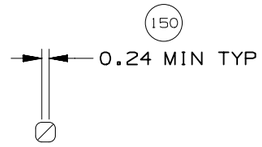

SECTION BB-BB

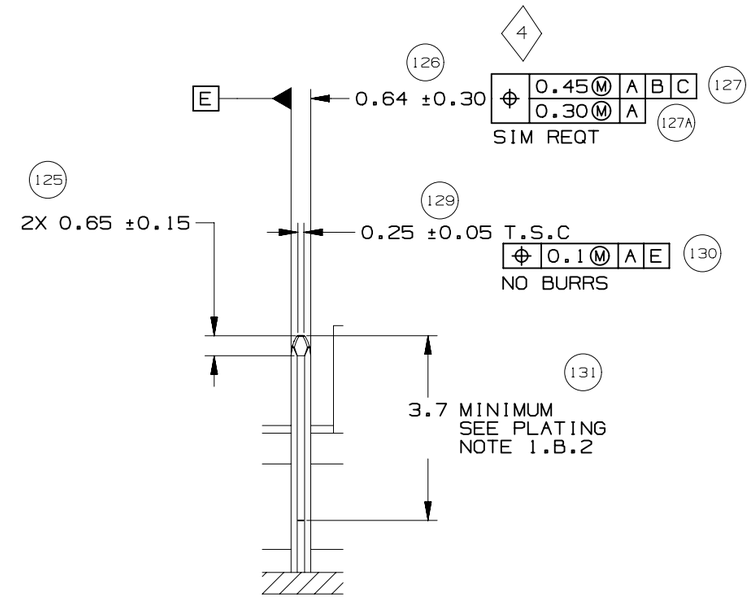

SECTION U-U
TYPICAL

	GM	PAGE TITLE: COMPONENT CONNECTOR INTERFACE		DRAWING NUMBER: 12672833	DWG STATUS ST: R	REV: 001	PDI:	PAGE NUMBER: 20 OF 22

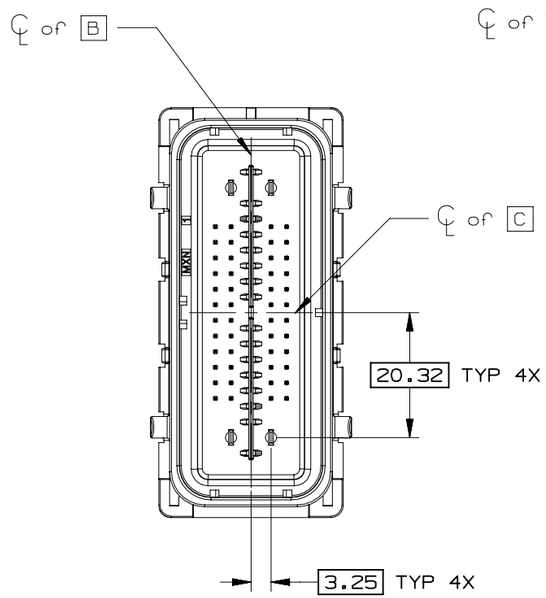

52 CKT COMPONENT
CONNECTOR INTERFACE

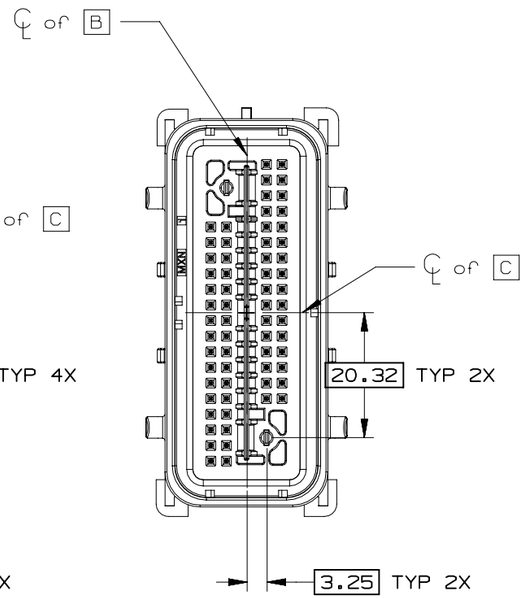

66 CKT COMPONENT
CONNECTOR INTERFACE

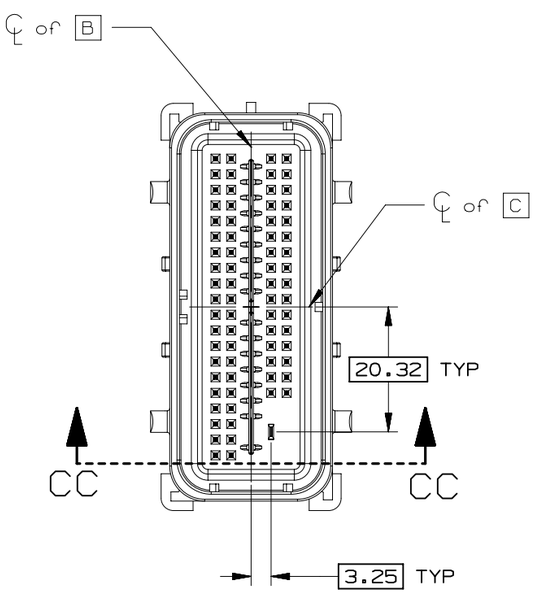

73 CKT COMPONENT
CONNECTOR INTERFACE

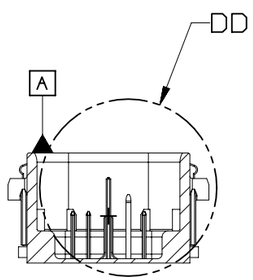

SECTION CC-CC

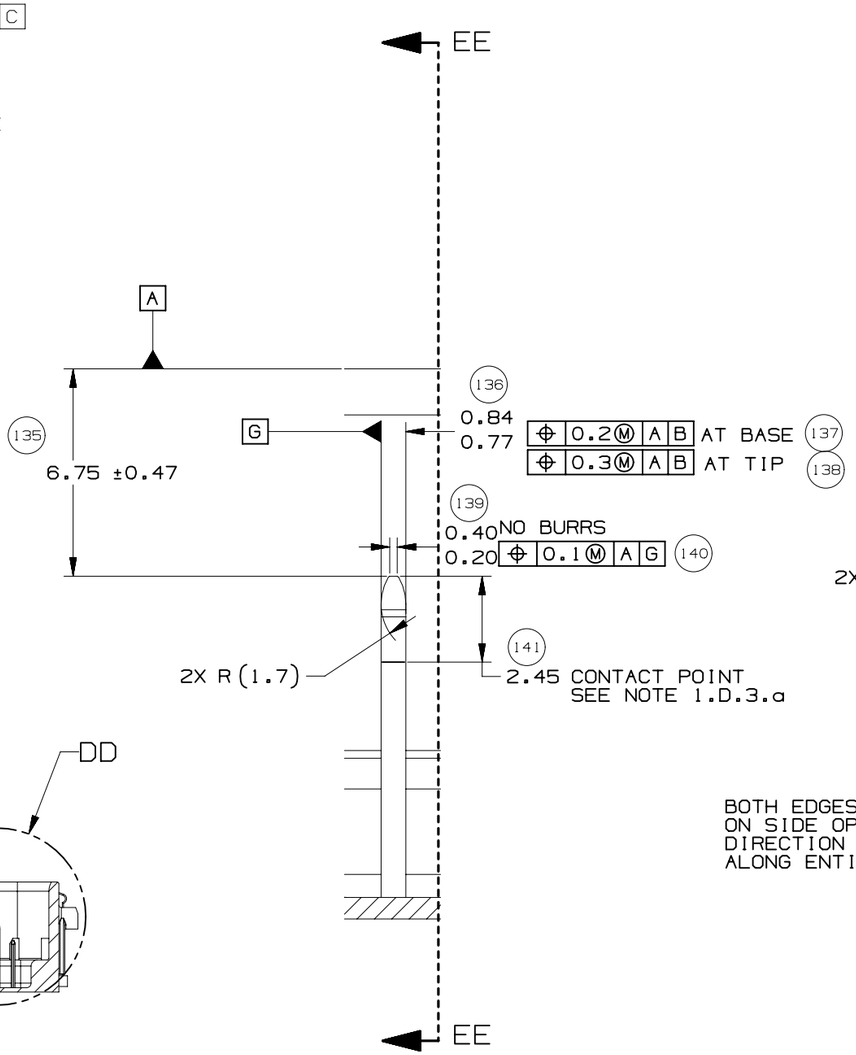

DETAIL DD
TYPICAL
SCALE 5:1

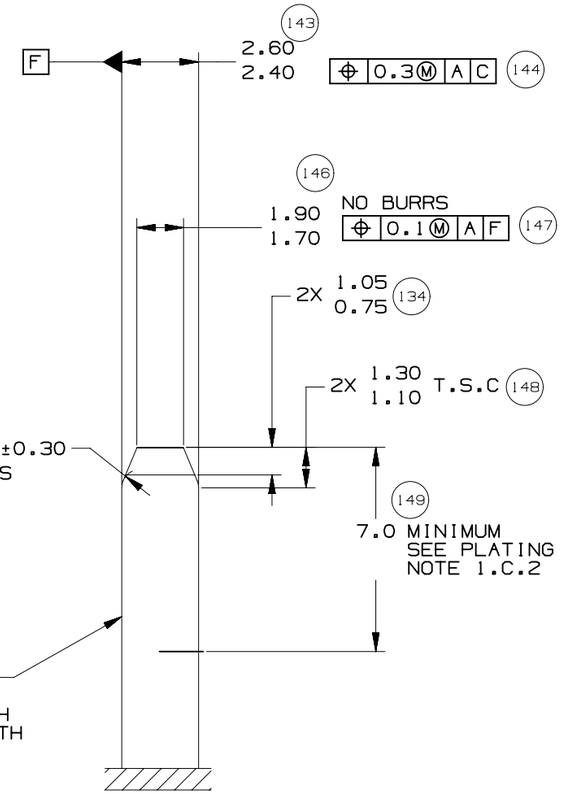

SECTION EE-EE
TYPICAL

	GM	PAGE TITLE: COMPONENT CONNECTOR INTERFACE		DRAWING NUMBER: 12672833	DWG STATUS: ST R / REV 001 / PDI		PAGE NUMBER: 21 OF 22

MOLEX MX64 RECEPTACLE TERMINAL INFORMATION							
ITEM	MOLEX P/N	GM P/N	WIRE SIZE MM2	TYPE	PLATING	REEL WIND DIRECTION	COMMENTS
1	34736-0025		0.35	ISO	SILVER	LEFT	
2	34736-0026	12672850	0.35	ISO	SILVER	RIGHT	
3	34736-0027		0.5 / 0.75	ISO	SILVER	LEFT	
4	34736-0028	12672851	0.5 / 0.75	ISO	SILVER	RIGHT	

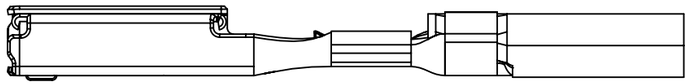

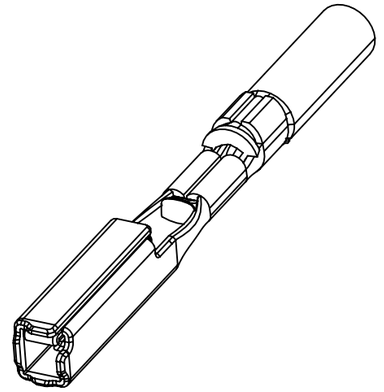

CAVITY PLUGS									
ITEM	MFG	MFG P/N	GM P/N RD	SIZE	COLOR	MFG DRAWING	PROD SPEC	APP SPEC	COMMENTS
1	MOLEX	34586-0001	12674820	0.64	NATURAL	SD-34586-001	PS-34566-0000	AS-34566-001	
2	YAZAKI	7158-3114-90	12674821	2.8	BLUE	7158-3114-90	YPES-11-04-062	YPES-15-299	

ITEM 1

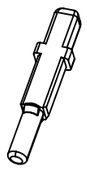

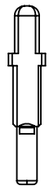

ITEM 2

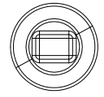

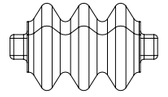

	GM	PAGE TITLE: ADDITIONAL COMPONENTS REQUIRED		DRAWING NUMBER: 12672833	DWG STATUS ST: R	REV: 001	PDI:	PAGE NUMBER: 22 OF 22

molex

MX123 SEALED RCPT ASSY (73 Ckt)
BOM & PIN OUT SHEET

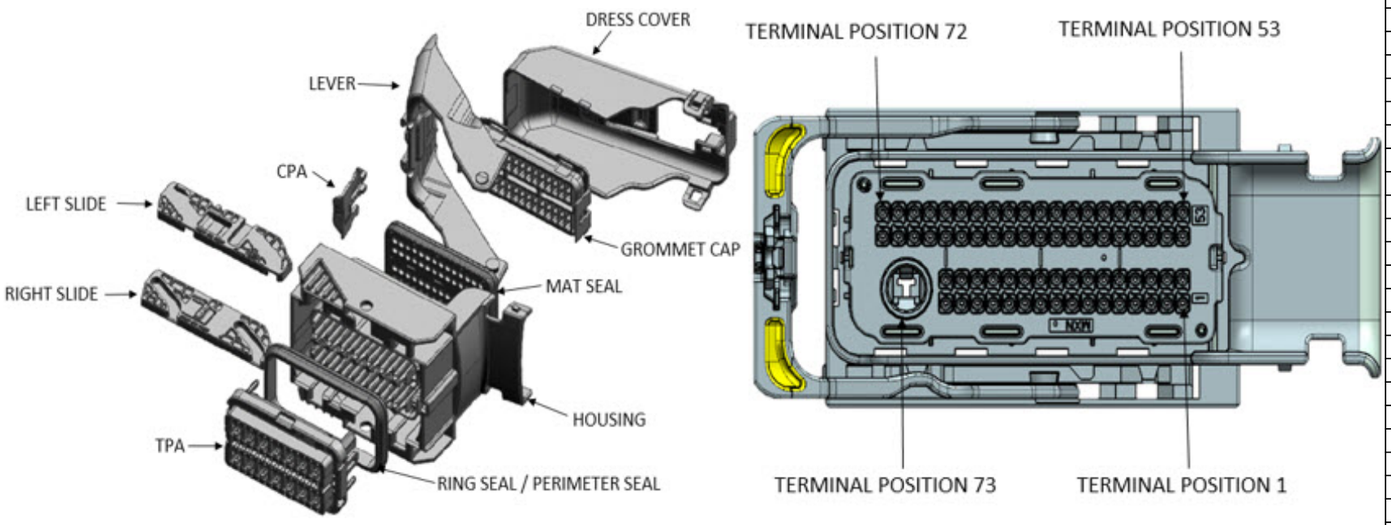

ABBREVIATION	DESCRIPTION	COLOR	MATERIAL
G-CAP-0-P	GROMMET CAP OPTION 0 PLUGGED	BLACK	SPS/PA, G.F 30%
G-CAP-0-O	GROMMET CAP OPTION 0 All OPEN	BLACK	SPS/PA, G.F 30%
G-CAP-9-P	GROMMET CAP OPTION 9 PLUGGED	BLACK	SPS/PA, G.F 30%
G-CAP-9-O	GROMMET CAP OPTION 9 All OPEN	BLACK	SPS/PA, G.F 30%
C-HSG-A0	CONNECTOR HOUSING KEY A - WDC OPT 0	BLACK	SPS/PA, G.F 30%
C-HSG-B0	CONNECTOR HOUSING KEY B- WDC OPT 0	BLACK	SPS/PA, G.F 30%
C-HSG-C0	CONNECTOR HOUSING KEY C- WDC OPT 0	BLACK	SPS/PA, G.F 30%
C-HSG-D0	CONNECTOR HOUSING KEY D - WDC OPT 0	BLACK	SPS/PA, G.F 30%
C-HSG-E0	CONNECTOR HOUSING KEY E - WDC OPT 0	BLACK	SPS/PA, G.F 30%
C-HSG-F0	CONNECTOR HOUSING KEY F- WDC OPT 0	BLACK	SPS/PA, G.F 30%
C-HSG-A9	CONNECTOR HOUSING KEY A- WDC OPT 9	BLACK	SPS/PA, G.F 30%
C-HSG-B9	CONNECTOR HOUSING KEY B- WDC OPT 9	BLACK	SPS/PA, G.F 30%
C-HSG-C9	CONNECTOR HOUSING KEY C- WDC OPT 9	BLACK	SPS/PA, G.F 30%
C-HSG-D9	CONNECTOR HOUSING KEY D- WDC OPT 9	BLACK	SPS/PA, G.F 30%
C-HSG-E9	CONNECTOR HOUSING KEY E- WDC OPT 9	BLACK	SPS/PA, G.F 30%
C-HSG-F9	CONNECTOR HOUSING KEY F- WDC OPT 9	BLACK	SPS/PA, G.F 30%
TPA-A0	TERMINAL POSITION ASSURANCE (TPA) OPTION 0	BLACK	SPS/PA, G.F 30%
TPA-B0	TERMINAL POSITION ASSURANCE (TPA) OPTION 0	STONE GRAY	SPS/PA, G.F 30%
TPA-C0	TERMINAL POSITION ASSURANCE (TPA) OPTION 0	BLUE	SPS/PA, G.F 30%
TPA-D0	TERMINAL POSITION ASSURANCE (TPA) OPTION 0	BROWN	SPS/PA, G.F 30%
TPA-E0	TERMINAL POSITION ASSURANCE (TPA) OPTION 0	GREEN	SPS/PA, G.F 30%
TPA-F0	TERMINAL POSITION ASSURANCE (TPA) OPTION 0	NATURAL	SPS/PA, G.F 30%
TPA-A0-1	TERMINAL POSITION ASSURANCE (TPA) OPTION 0	BLACK	SPS/PA, G.F 30%
TPA-B0-1	TERMINAL POSITION ASSURANCE (TPA) OPTION 0	STONE GRAY	SPS/PA, G.F 30%
TPA-C0-1	TERMINAL POSITION ASSURANCE (TPA) OPTION 0	BLUE	SPS/PA, G.F 30%
TPA-A9	TERMINAL POSITION ASSURANCE (TPA) OPTION 9	BLACK	SPS/PA, G.F 30%
TPA-B9	TERMINAL POSITION ASSURANCE (TPA) OPTION 9	STONE GRAY	SPS/PA, G.F 30%
TPA-C9	TERMINAL POSITION ASSURANCE (TPA) OPTION 9	BLUE	SPS/PA, G.F 30%
TPA-D9	TERMINAL POSITION ASSURANCE (TPA) OPTION 9	BROWN	SPS/PA, G.F 30%
TPA-E9	TERMINAL POSITION ASSURANCE (TPA) OPTION 9	GREEN	SPS/PA, G.F 30%
TPA-F9	TERMINAL POSITION ASSURANCE (TPA) OPTION 9	NATURAL	SPS/PA, G.F 30%
MAL	MATE ASSIST LEVER	BLACK	SPS/NYLON GF30
RS	SLIDE - RIGHT	BLACK	PBT W/PTFE, G.F. 30%
LS	SLIDE - LEFT	BLACK	PBT W/PTFE, G.F. 30%
CVR BLACK	DRESS COVER BLACK	BLACK	PBT, G.F. 30%
CVR GRAY	DRESS COVER GRAY	GRAY	PBT, G.F. 30%
CVR BLUE	DRESS COVER BLUE	BLUE	PBT, G.F. 30%
CVR BROWN	DRESS COVER BROWN	BROWN	PBT, G.F. 30%
CVR GREEN	DRESS COVER GREEN	GREEN	PBT, G.F. 30%
CVR NATURAL	DRESS COVER NATURAL	NATURAL	PBT, G.F. 30%
CVR YELLOW	DRESS COVER YELLOW	YELLOW	PBT, G.F. 30%
CPA	CONNECTOR POSITION ASSURANCE (CPA)	RED	PPE/PA 10% GF
MSEAL	MAT SEAL	RUST RED	INHERENTLY LUBRICATED SILICONE RUBBER
RSEAL	RING SEAL	RUST RED	INHERENTLY LUBRICATED SILICONE RUBBER

FOR ADDITIONAL INFOMRATION SEE SD-34566-001

ASSEMBLY DESCRIPTION	ASSEMBLY PART NUMBER	CONNECTOR HOUSING	GROMMET CAP	TPA	RIGHT SLIDE	LEFT SLIDE	MATE ASSIST LEVER	CPA	MAT SEAL	RING SEAL	BLOCKED TERMINALS CAVITY WITH A NUMBER INDICATES BLOCKED TERMINAL POSITION CAVITY WITHOUT A NUMBER INDICATES OPEN TERMINAL POSITION	STATUS	COMMENTS	INTEGRAL COMPONENTS SOLD SEPARATELY DRESS COVER
MX123 CONN ASSY 73 CKT BLK OPT0 KEY A/54	345660004	C-HSG-A0	G-CAP-0-P	TPA-A0	RS	LS	MAL	CPA	MSEAL	RSEAL	- - - - 68 - 66 65 - - 62 - - - 58 - - - - - - - 50 49 - 47 46 - - - 42 - - - - - - - - - - 32 - - - 28 - - - 24 23 - 21 20 - - 17 - - - - - - - - - - - - 4 3 - -	SALEABLE		345650003
MX123 CONN ASSY 73 CKT BLK OPT0 KEY A/52	345660044	C-HSG-A0	G-CAP-0-P	TPA-A0	RS	LS	MAL	CPA	MSEAL	RSEAL	- - - - 68 - 66 65 - 63 62 - - - 58 - - - - - - - 50 49 - 47 46 - - 43 42 - - - - - - - - - - 32 - - - 28 - - - 24 23 - 21 20 - - 17 - - - - - - - - - - - - 4 - - 1	SALEABLE		345650003
MX123 CONN ASSY 73 CKT BLK OPT0 KEY A/53	345660064	C-HSG-A0	G-CAP-0-P	TPA-A0	RS	LS	MAL	CPA	MSEAL	RSEAL	- - - - 68 - 66 65 - - 62 - - - 58 - - - - - - - 50 49 - 47 46 - - - 42 - - - - - - - - 33 - 32 - - - 28 - - - 24 23 - 21 20 - - 17 - - - - - - - - - - - - 4 3 - -	SALEABLE		345650003

molex

MX123 SEALED RCPT ASSY (73 Ckt)
BOM & PIN OUT SHEET

ASSEMBLY DESCRIPTION	ASSEMBLY PART NUMBER	CONNECTOR HOUSING	GROMMET CAP	TPA	RIGHT SLIDE	LEFT SLIDE	MATE ASSIST LEVER	CPA	MAT SEAL	RING SEAL	BLOCKED TERMINALS CAVITY WITH A NUMBER INDICATES BLOCKED TERMINAL POSITION CAVITY WITHOUT A NUMBER INDICATES OPEN TERMINAL POSITION	STATUS	COMMENTS	INTEGRAL COMPONENTS SOLD SEPARATELY DRESS COVER
MX123 CONN ASSY 73 CKT BLK OPT0 KEY A/48	345660084	C-HSG-A0	G-CAP-0-P	TPA-A0	RS	LS	MAL	CPA	MSEAL	RSEAL	72 71 - - 68 - 66 65 - 63 62 - - - 58 - - - - - - - 50 49 - 47 46 - - 43 42 - - - - - - - - - - 32 - - - 28 - - - 24 23 - 21 20 - 18 17 - - - - - - - 9 - - - - 4 - - 1	SALEABLE		345650003
MX123 CONN ASSY 73 CKT GRY OPT0 KEY B/61	345660094	C-HSG-B0	G-CAP-0-P	TPA-B0	RS	LS	MAL	CPA	MSEAL	RSEAL	- - - - - - 66 - - - - - - - 58 - - - - - - - - - - - - - - - - 41 - - 38 37 - - - - - - - - - - - - - - - - 20 19 18 17 - - - - - - - - 8 - - 5 - - - 1	SALEABLE		345650003
MX123 CONN ASSY 73 CKT BLK OPT0 KEY A/73	345660103	C-HSG-A0	G-CAP-0-P	TPA-A0	RS	LS	MAL	CPA	MSEAL	RSEAL	- -	SALEABLE		345650003
MX123 CONN ASSY 73 CKT GRY OPT0 KEY B/58	345660104	C-HSG-B0	G-CAP-0-P	TPA-B0	RS	LS	MAL	CPA	MSEAL	RSEAL	- - - - - - 66 - - - - - - - 58 - - - - - 52 51 - - - - - 45 - - - 41 - - 38 37 - - - - - - - - - - - - - - - - 20 19 18 17 - - - - - - - - 8 - - 5 - - - 1	SALEABLE		345650003
MX123 CONN ASSY 73 CKT GRY OPT0 KEY B/46	345660114	C-HSG-B0	G-CAP-0-P	TPA-B0	RS	LS	MAL	CPA	MSEAL	RSEAL	- - - - 68 67 66 65 - - 62 - 60 59 - - - - 54 53 - - - - 48 47 46 45 44 - 42 41 40 39 - - - 35 34 - - 31 - - - 27 - - - - - - - 19 18 17 - - - - - - - - - - - - - - 3 2 -	SALEABLE		345650003
MX123 CONN ASSY 73 CKT GRY OPT0 KEY B/26	345660124	C-HSG-B0	G-CAP-0-P	TPA-B0	RS	LS	MAL	CPA	MSEAL	RSEAL	- 71 70 69 68 67 66 65 64 63 - - - - 58 57 56 - 54 53 - 51 50 49 - - - 45 44 43 42 41 - 39 38 37 36 35 34 - - 32 31 - 29 28 27 26 25 24 23 - - - - - - - - - - - 13 12 11 10 9 8 7 - 5 - - 2 1	SALEABLE		345650003
MX123 CONN ASSY 73 CKT GRY OPT0 KEY B/30	345660134	C-HSG-B0	G-CAP-0-P	TPA-B0	RS	LS	MAL	CPA	MSEAL	RSEAL	- 71 70 69 68 67 66 65 64 63 - - - - 58 57 56 - 54 53 - 51 50 49 - - - 45 44 43 42 - - 39 - - - - 34 33 - 32 31 - 29 28 27 26 25 24 23 - - - - - - 17 - - - - 13 12 11 10 9 8 7 - 5 - - 2 -	SALEABLE		345650003
MX123 CONN ASSY 73 CKT GRY OPT9 KEY B/14	345660144	C-HSG-B9	G-CAP-9-P	TPA-B9	RS	LS	MAL	CPA	MSEAL	RSEAL	72 71 70 69 68 67 - 65 64 63 62 61 60 59 - 57 56 55 54 53 52 51 50 49 48 47 46 45 44 43 42 - 40 39 - - 36 35 34 33 - 32 31 30 29 28 27 26 25 24 23 22 21 - - - - - 16 15 14 13 12 11 10 9 - 7 6 - - 3 2 -	SALEABLE		345650003
MX123 CONN ASSY 73 CKT GRY OPT9 KEY B/62	345660154	C-HSG-B9	G-CAP-9-P	TPA-B9	RS	LS	MAL	CPA	MSEAL	RSEAL	- - - - - - - - - - - - - - - 58 - - - - - - - - - - - - - - - - 41 - - 38 37 - 20 19 18 17 - - - - - - - - - - - - - - - 5 4 - - 1	SALEABLE		345650003
MX123 CONN ASSY 73 CKT GRY OPT9 KEY B/34	345660174	C-HSG-B9	G-CAP-9-P	TPA-B9	RS	LS	MAL	CPA	MSEAL	RSEAL	- - - 69 68 - - 65 64 63 62 61 - 59 58 - 56 55 54 - - - - 49 48 - - 45 44 43 42 41 40 - 38 - 36 - 34 - - 32 31 - - - 27 26 - - - - 21 - - 18 - - 16 15 14 - - 11 10 9 - - 6 5 4 - 2 -	SALEABLE		345650003
MX123 CONN ASSY 73 CKT GRY OPT9 KEY B/52	345660184	C-HSG-B9	G-CAP-9-P	TPA-B9	RS	LS	MAL	CPA	MSEAL	RSEAL	- - - - - - - - - - 62 - 60 59 - - - - - - - - - - - - - - - - - - - 39 38 - - 35 34 33 - 31 - - - 27 - - - 23 22 - 20 19 18 17 - 15 - - - - - - - 7 - - 4 3 2 -	SALEABLE		345650003
MX123 CONN ASSY 73 CKT BLU OPT0 KEY C/40	345660194	C-HSG-C0	G-CAP-0-P	TPA-C0	RS	LS	MAL	CPA	MSEAL	RSEAL	- - - - 68 - - - - 63 62 61 60 59 58 57 - 55 54 53 - - - - 48 - - - - 43 42 41 40 - 38 37 36 35 34 33 - 32 - - 29 - 27 - - - - - - - - 19 18 17 - - - - - - 11 10 - - - - - - - 3 2 1	SALEABLE		345650003

molex

MX123 SEALED RCPT ASSY (73 Ckt)
BOM & PIN OUT SHEET

ASSEMBLY DESCRIPTION	ASSEMBLY PART NUMBER	CONNECTOR HOUSING	GROMMET CAP	TPA	RIGHT SLIDE	LEFT SLIDE	MATE ASSIST LEVER	CPA	MAT SEAL	RING SEAL	BLOCKED TERMINALS CAVITY WITH A NUMBER INDICATES BLOCKED TERMINAL POSITION CAVITY WITHOUT A NUMBER INDICATES OPEN TERMINAL POSITION	STATUS	COMMENTS	INTEGRAL COMPONENTS SOLD SEPARATELY DRESS COVER
MX123 CONN ASSY 73 CKT GRY OPT0 KEY B/73	345660203	C-HSG-B0	G-CAP-0-P	TPA-B0	RS	LS	MAL	CPA	MSEAL	RSEAL	- -	SALEABLE		345650003
MX123 CONN ASSY 73 CKT BLU OPT0 KEY C/36	345660204	C-HSG-C0	G-CAP-0-P	TPA-C0	RS	LS	MAL	CPA	MSEAL	RSEAL	72 - - 69 68 - 66 65 - 63 62 - - 59 58 - 56 55 - 53 52 - - 49 - - 46 - - 43 42 - 40 39 38 - 36 35 - - - - 31 30 29 - - 26 - 24 23 22 21 20 19 18 - - - - - - - - - - - - - - 4 3 2 1	SALEABLE		345650003
MX123 CONN ASSY 73 CKT GRY OPT0 KEY B/23	345660214	C-HSG-B0	G-CAP-0-P	TPA-B0	RS	LS	MAL	CPA	MSEAL	RSEAL	- 71 70 69 68 67 66 65 64 63 - - - - 58 57 56 - 54 53 - 51 50 49 48 47 - 45 44 43 42 - - 39 38 37 36 35 34 33 - 32 31 30 29 28 27 26 - 24 23 - - - - - 17 - - - 13 12 11 10 9 8 7 - 5 - - 2 1	SALEABLE		345650003
MX123 CONN ASSY 73 CKT GRY OPT9 KEY B/65	345660224	C-HSG-B9	G-CAP-9-P	TPA-B9	RS	LS	MAL	CPA	MSEAL	RSEAL	- - - - - - 66 - - - 62 - - - - - - - - - - - - - - - - 45 - - - 41 - 19 18 17 - - - - - - - - - - - - - - - - - - - 1	SALEABLE		345650003
MX123 CONN ASSY 73 CKT BLK OPT0 KEY A/49	345660234	C-HSG-A0	G-CAP-0-P	TPA-A0	RS	LS	MAL	CPA	MSEAL	RSEAL	- - - - - 67 - - - 63 62 - - 59 58 - - 55 - - - - - - - 47 - - - - - 41 - - - - - 35 - - - 32 - - - - 27 26 25 24 - - - - 19 18 17 16 - - - - 11 10 9 8 - - - - 3 - 1	SALEABLE		345650003
MX123 CONN ASSY 73 CKT BLK OPT9 KEY A/34	345660244	C-HSG-A9	G-CAP-9-P	TPA-A9	RS	LS	MAL	CPA	MSEAL	RSEAL	- - - 69 68 - - 65 64 63 62 61 - 59 58 - 56 55 54 - - - - 49 48 - - 45 44 43 42 41 40 - 38 - 36 - 34 - - 32 31 - - - 27 26 - - - - 21 - - 18 - 16 15 14 - - 11 10 9 - - 6 5 4 - 2 -	SALEABLE		345650003
MX123 CONN ASSY 73 CKT GRY OPT0 KEY B/49	345660254	C-HSG-B0	G-CAP-0-P	TPA-B0	RS	LS	MAL	CPA	MSEAL	RSEAL	- - - - - - - - - - 62 - 60 59 - - - - 54 53 - - - - - - - - - - 42 41 - 39 38 - - - 34 33 - - 31 - - - 27 - - - 23 22 - 20 - 18 17 - 15 - - - - - - - 7 - - 4 3 2 1	SALEABLE		345650003
MX123 CONN ASSY 73 CKT BLK OPT9 KEY A/40	345660264	C-HSG-A9	G-CAP-9-P	TPA-A9	RS	LS	MAL	CPA	MSEAL	RSEAL	- - - 69 68 - - - - - - - 60 - 58 57 56 - - - - - - 49 48 - - - - - - - 40 - 38 - - - - - - 32 31 - - 28 27 26 25 24 23 22 21 20 19 - - 16 15 14 - 12 11 10 9 - - 6 5 4 - 2 -	SALEABLE		345650003
MX123 CONN ASSY 73 CKT GRY OPT9 KEY B/52	345660274	C-HSG-B9	G-CAP-9-P	TPA-B9	RS	LS	MAL	CPA	MSEAL	RSEAL	- - - - - - - - - - 62 - 60 59 - - - - - - - - - - - - - - - - 42 - 40 39 - - - 35 34 33 - - 31 - - - 27 - - - 23 22 - 20 - 18 17 - - - - - 11 - - - 7 - - 4 3 2 -	SALEABLE		345650003
MX123 CONN ASSY 73 CKT BLK OPT9 KEY A/29	345660284	C-HSG-A9	G-CAP-9-P	TPA-A9	RS	LS	MAL	CPA	MSEAL	RSEAL	- - - 69 68 - - 65 64 63 62 61 60 59 58 - 56 55 54 - - - - 49 48 - - 45 44 43 42 41 40 - - - 36 - 34 - - 32 31 - - - 27 26 25 24 23 22 21 20 19 18 - 16 15 14 - - 11 10 9 - - - 5 4 - 2 -	SALEABLE		345650003
MX123 CONN ASSY 73 CKT GRY OPT0 KEY B/48	345660294	C-HSG-B0	G-CAP-0-P	TPA-B0	RS	LS	MAL	CPA	MSEAL	RSEAL	- - - - - - - - - - 62 - 60 59 - - - - 54 53 - - - - - - - - - - 42 41 - 39 38 - - 35 34 33 - - 31 - - - 27 - - - 23 22 - 20 - 18 17 - 15 - - - - - - - 7 - - 4 3 2 1	SALEABLE		345650003
MX123 CONN ASSY 73 CKT BLU OPT0 KEY C/73	345660303	C-HSG-C0	G-CAP-0-P	TPA-C0	RS	LS	MAL	CPA	MSEAL	RSEAL	- -	SALEABLE		345650003

molex

MX123 SEALED RCPT ASSY (73 Ckt)
BOM & PIN OUT SHEET

ASSEMBLY DESCRIPTION	ASSEMBLY PART NUMBER	CONNECTOR HOUSING	GROMMET CAP	TPA	RIGHT SLIDE	LEFT SLIDE	MATE ASSIST LEVER	CPA	MAT SEAL	RING SEAL	BLOCKED TERMINALS CAVITY WITH A NUMBER INDICATES BLOCKED TERMINAL POSITION CAVITY WITHOUT A NUMBER INDICATES OPEN TERMINAL POSITION	STATUS	COMMENTS	INTEGRAL COMPONENTS SOLD SEPARATELY DRESS COVER
MX123 CONN ASSY 73 CKT GRY OPT9 KEY B/53	345660304	C-HSG-B9	G-CAP-9-P	TPA-B9	RS	LS	MAL	CPA	MSEAL	RSEAL	- - - - - - - - - - 62 - 60 59 - 39 38 - - 35 34 - - - - - - 31 - - - 27 - - - 23 22 - 20 19 18 17 - - - - - 15 - - - - - - - 7 - - 4 3 2 -	SALEABLE		345650003
MX123 CONN ASSY 73 CKT GRY OPT9 KEY B/61	345660314	C-HSG-B9	G-CAP-9-P	TPA-B9	RS	LS	MAL	CPA	MSEAL	RSEAL	- - - - - - - - - - - - - - 58 - - - - - - - - - - - - - - - - 41 - - 38 37 - - - - - - - - - - - - - - - - - - - 20 19 18 17 - - - - - - - - - - - - 8 - - 5 4 - - 1	SALEABLE		345650003
MX123 CONN ASSY 73 CKT GRY OPT9 KEY B/43	345660324	C-HSG-B9	G-CAP-9-P	TPA-B9	RS	LS	MAL	CPA	MSEAL	RSEAL	- - - - 68 67 66 65 - - 62 - 60 59 - - - - 54 53 - - - - 48 47 46 45 44 - 42 41 40 39 - - - 35 34 33 - - - - - 31 - - - 27 - - - - - - - 19 18 17 - - - - - 15 - - - - - - - - - - - 3 2 1	SALEABLE		345650003
MX123 CONN ASSY 73 CKT GRY OPT0 KEY B/50	345660334	C-HSG-B0	G-CAP-0-P	TPA-B0	RS	LS	MAL	CPA	MSEAL	RSEAL	- 38 37 - 35 34 - - - - - 32 31 - 29 28 27 26 25 24 23 - - - - - - - - - - - - - 13 12 11 10 9 8 7 - 5 - - 2 1	SALEABLE		345650003
MX123 CONN ASSY 73 CKT GRY OPT0 KEY B/68	345660344	C-HSG-B0	G-CAP-0-P	TPA-B0	RS	LS	MAL	CPA	MSEAL	RSEAL	- 19 18 17 - - - - - - - - - - - - - - - - - - - 3 2 -	SALEABLE		345650003
MX123 CONN ASSY 73 CKT GRY OPT0 KEY B/54	345660354	C-HSG-B0	G-CAP-0-P	TPA-B0	RS	LS	MAL	CPA	MSEAL	RSEAL	- 42 - - 39 - - - - - - - - - - 32 31 - 29 28 27 26 25 24 23 - - - - - 17 - - - - - - - 13 12 11 10 9 - - - 5 - - 2 -	SALEABLE		345650003
MX123 CONN ASSY 73 CKT GRY OPT0 KEY B/49	345660364	C-HSG-B0	G-CAP-0-P	TPA-B0	RS	LS	MAL	CPA	MSEAL	RSEAL	- 38 37 36 35 34 - - - - - 32 31 - 29 28 27 26 25 24 23 - - - - - - - - - - - - - 13 12 11 10 9 8 7 - 5 - - 2 1	SALEABLE		345650003
MX123 CONN ASSY 73 CKT BLK OPT0 KEY A/53	345660374	C-HSG-A0	G-CAP-0-P	TPA-A0	RS	LS	MAL	CPA	MSEAL	RSEAL	- 42 - - 39 - - - - - - - - - - 32 31 - 29 28 27 26 25 24 23 - - - - - 17 - - - - - - - 13 12 11 10 9 - 7 - 5 - - 2 -	SALEABLE		345650003
MX123 CONN ASSY 73 CKT GRY OPT0 KEY B/59	345660384	C-HSG-B0	G-CAP-0-P	TPA-B0	RS	LS	MAL	CPA	MSEAL	RSEAL	- - - - - - 66 - - - 62 - - - 58 - - - - - - - - - - - - - - - - 41 - - 38 37 - - - - - - - - - - - - - - - - - - - 20 19 18 17 - - - - - - - - - - - - 8 - - 5 4 - - 1	SALEABLE		345650003
MX123 CONN ASSY 73 CKT GRY OPT9 KEY B/58	345660394	C-HSG-B9	G-CAP-9-P	TPA-B9	RS	LS	MAL	CPA	MSEAL	RSEAL	- - - - - - 66 - - - - - - - 58 - - - - - 52 51 - - - - - 45 - - - 41 - - 38 37 - 20 19 18 17 - - - - - - - - - - - - 8 - 6 - - - - 1	SALEABLE		345650003
MX123 CONN ASSY 73 CKT GRY OPT0 KEY B/48	345660404	C-HSG-B0	G-CAP-0-P	TPA-B0	RS	LS	MAL	CPA	MSEAL	RSEAL	- - - - - - - - - - 62 - 60 59 - - - - 54 53 - - - - - - - - - - 42 41 - 39 38 - - 35 34 33 - - - - - 31 - - - 27 - 25 - 23 22 - - - 18 17 - - - - - 15 - - - - - - - 7 - - 4 3 2 1	SALEABLE		345650003
MX123 CONN ASSY 73 CKT BLK OPT0 KEY A/56	345660484	C-HSG-A0	G-CAP-0-P	TPA-A0	RS	LS	MAL	CPA	MSEAL	RSEAL	- - - - 68 - 66 65 - - 62 - - - 58 - - - - - - - 50 49 - 47 46 - - - 42 - - - - - - - - - - - - - 32 - - - 28 - - - 24 23 - - 20 - - 17 - - - - - - - - - - - - - - - - - 4 - - -	SALEABLE		345650003

molex

MX123 SEALED RCPT ASSY (73 Ckt)
BOM & PIN OUT SHEET

ASSEMBLY DESCRIPTION	ASSEMBLY PART NUMBER	CONNECTOR HOUSING	GROMMET CAP	TPA	RIGHT SLIDE	LEFT SLIDE	MATE ASSIST LEVER	CPA	MAT SEAL	RING SEAL	BLOCKED TERMINALS CAVITY WITH A NUMBER INDICATES BLOCKED TERMINAL POSITION CAVITY WITHOUT A NUMBER INDICATES OPEN TERMINAL POSITION	STATUS	COMMENTS	INTEGRAL COMPONENTS SOLD SEPARATELY DRESS COVER
MX123 CONN ASSY 73 CKT GRY OPT0 KEY B/46	345660514	C-HSG-B0	G-CAP-0-P	TPA-B0	RS	LS	MAL	CPA	MSEAL	RSEAL	- - - - - - - - - - 62 - 60 59 - - - - 54 53 - - - - - - - - - - 42 41 - 39 38 - - 35 34 33 - - 31 - - - 27 - - - 23 22 - 20 19 18 17 - - 15 - - 12 - - - - 7 - - 4 3 2 1	SALEABLE		345650003
MX123 CONN ASSY 73 CKT BLK OPT0 KEY A/30	345660524	C-HSG-A0	G-CAP-0-P	TPA-A0	RS	LS	MAL	CPA	MSEAL	RSEAL	- - - 69 68 - - 65 64 63 62 61 60 59 58 57 56 55 54 - - - - 49 48 - - 45 44 43 42 41 40 - 38 - 36 - 34 - 32 31 - - - - - 25 24 23 22 21 20 19 18 - 16 15 14 - - - - 9 - - 6 5 4 - 2 -	SALEABLE		345650003
MX123 CONN ASSY 73 CKT BLK OPT9 KEY A/46	345660534	C-HSG-A9	G-CAP-9-P	TPA-A9	RS	LS	MAL	CPA	MSEAL	RSEAL	- - - - - - - 65 - 63 - 61 - 59 58 57 - - - 53 - - - - 48 - - - - 43 42 41 - - 38 37 - - 34 - 32 31 30 29 28 - - - - 23 22 - - 19 - 17 - 15 - - - 11 - - - 7 - - - - 2 -	SALEABLE		345650003
MX123 CONN ASSY 73 CKT GRY OPT9 KEY B/59	345660544	C-HSG-B9	G-CAP-9-P	TPA-B9	RS	LS	MAL	CPA	MSEAL	RSEAL	- - - - - - 66 - - - 62 - - - 58 - - - - - - - - - - - - - - - - 41 - - 38 37 - - - - - - - - - - - - - - - - - - - 20 19 18 17 - - - - - - - - - 8 - - 5 4 - - 1	SALEABLE		345650003
MX123 CONN ASSY 73 CKT NAT OPT0 KEY F/73	345660603	C-HSG-F0	G-CAP-0-P	TPA-F0	RS	LS	MAL	CPA	MSEAL	RSEAL	- -	SALEABLE		345650003
MX123 CONN ASSY 73 CKT BLK OPT9 KEY A/38	345660604	C-HSG-A9	G-CAP-9-P	TPA-A9	RS	LS	MAL	CPA	MSEAL	RSEAL	- - - 69 68 - - - - - - - 60 - 58 57 56 - 54 - - - - 49 48 - - - - - - - 40 - - - - 35 34 - 32 31 - - 28 27 26 25 24 23 22 21 20 19 18 - 16 15 14 - 12 11 10 9 - - - 5 4 - 2 -	SALEABLE		345650003
MX123 CONN ASSY 73 CKT GRY OPT0 KEY B/43	345660624	C-HSG-B0	G-CAP-0-P	TPA-B0	RS	LS	MAL	CPA	MSEAL	RSEAL	- - - - 68 67 66 65 64 - 62 - 60 59 - - - - 54 53 - - - - 48 47 46 - 44 - 42 - 40 39 - - - 35 34 - - 31 - - - 27 - - - - - - - 19 18 17 - 15 14 - - 11 - - - - - - - 3 2 1	SALEABLE		345650003
MX123 CONN ASSY 73 CKT BLK OPT9 KEY A/42	345660634	C-HSG-A9	G-CAP-9-P	TPA-A9	RS	LS	MAL	CPA	MSEAL	RSEAL	72 71 - - 68 - 66 65 - 63 62 - - - 58 - - - - - - - 50 49 - 47 46 - - 43 42 - 40 - - - - - - - 32 31 - 29 - - - - 24 23 - 21 20 - 18 17 16 - - - - - - 9 - 7 6 - 4 3 - 1	SALEABLE		345650003
MX123 CONN ASSY 73 CKT BLK OPT9 KEY A/43	345660654	C-HSG-A9	G-CAP-9-P	TPA-A9	RS	LS	MAL	CPA	MSEAL	RSEAL	72 71 - - 68 - 66 65 - 63 62 - - - 58 - - - - - - - 50 49 - 47 46 - - 43 42 - 40 - - - - - - 33 32 31 - 29 - - - - 24 23 - - 20 - 18 17 16 - - - - - - 9 - - 6 - 4 3 - 1	SALEABLE		345650003
MX123 CONN ASSY 73 CKT GRY OPT9 KEY B/50	345660674	C-HSG-B9	G-CAP-9-P	TPA-B9	RS	LS	MAL	CPA	MSEAL	RSEAL	- - - - - - 66 65 - - 62 - 60 59 - - - - 54 53 - - - - - - 46 45 - - 42 - 40 39 - - - 35 34 33 - 31 - - - 27 - - - - - - - - 18 17 - - - - - 11 - - - - - - - 3 2 1	SALEABLE		345650003
MX123 CONN ASSY 73 CKT BLK OPT0 KEY A/24	345660724	C-HSG-A0	G-CAP-0-P	TPA-A0	RS	LS	MAL	CPA	MSEAL	RSEAL	72 71 70 69 - 67 - - 64 - - 61 60 59 - 57 56 55 54 53 52 51 - - 48 - - 45 44 - - 41 40 39 38 37 36 35 34 - - 31 30 29 - 27 26 25 - - 22 - - 19 18 - 16 15 14 13 12 11 10 9 8 7 6 5 - - 2 -	SALEABLE		345650003
MX123 CONN ASSY 73 CKT BLK OPT0 KEY A/51	345660774	C-HSG-A0	G-CAP-0-P	TPA-A0	RS	LS	MAL	CPA	MSEAL	RSEAL	- - - - 68 - 66 65 - 63 62 - - - 58 - - - - - - - 50 49 - 47 46 - - 43 42 - - - - - - - - - 32 - - - 28 - - - 24 23 - 21 20 - - 17 - - - - - - - - - - - - 4 3 - 1	SALEABLE		345650003

molex

MX123 SEALED RCPT ASSY (73 Ckt)
BOM & PIN OUT SHEET

ASSEMBLY DESCRIPTION	ASSEMBLY PART NUMBER	CONNECTOR HOUSING	GROMMET CAP	TPA	RIGHT SLIDE	LEFT SLIDE	MATE ASSIST LEVER	CPA	MAT SEAL	RING SEAL	BLOCKED TERMINALS CAVITY WITH A NUMBER INDICATES BLOCKED TERMINAL POSITION CAVITY WITHOUT A NUMBER INDICATES OPEN TERMINAL POSITION	STATUS	COMMENTS	INTEGRAL COMPONENTS SOLD SEPARATELY DRESS COVER
MX123 CONN ASSY 73 CKT BLK OPT0 KEY A/53	345660784	C-HSG-A0	G-CAP-0-P	TPA-A0	RS	LS	MAL	CPA	MSEAL	RSEAL	- - - - - - - 65 64 63 62 61 60 - - - - - - - - - - - - - - 45 44 43 42 41 40 - 38 - - - 34 - - - - - - - - - - - - - - - 21 20 19 - - - - - - - - - - - - - - 6 5 4 - - -	SALEABLE		345650003
MX123 CONN ASSY 73 CKT GRY OPT0 KEY B/47	345660794	C-HSG-B0	G-CAP-0-P	TPA-B0	RS	LS	MAL	CPA	MSEAL	RSEAL	- - - - - - - - - - 62 - 60 59 - - - - 54 53 - - - - - - - - - - 42 41 - 39 38 - - 35 34 33 - - - - - - - - - - 27 - - - 23 22 - 20 19 18 17 - 15 - - - 11 - - - 7 - - 4 3 2 1	SALEABLE		345650003
MX123 CONN ASSY 73 CKT BLK OPT0 KEY A/47	345660884	C-HSG-A0	G-CAP-0-P	TPA-A0	RS	LS	MAL	CPA	MSEAL	RSEAL	- - - - - - - 65 64 63 62 61 60 - - - - - - - - - - - - - - 45 44 43 42 41 40 - 38 - - 35 34 - - - - - - - - - - - 27 26 - - - - 21 20 19 - - - - - - - - - - - 11 10 9 - - 6 5 4 - - -	SALEABLE		345650003
MX123 CONN ASSY 73 CKT GRY OPT0 KEY B/39	345660924	C-HSG-B0	G-CAP-0-P	TPA-B0	RS	LS	MAL	CPA	MSEAL	RSEAL	- - - 69 68 67 66 65 - - 62 - 60 59 - - - - 54 53 - - - 49 48 47 46 45 44 - 42 41 40 39 - - - 35 34 33 - - 31 - - - 27 - - - - - - - - 19 18 17 - 15 - - 12 11 - - - - - - - 3 2 1	SALEABLE		345650003
MX123 CONN ASSY 73 CKT BLK OPT0 KEY A/48	345660964	C-HSG-A0	G-CAP-0-P	TPA-A0	RS	LS	MAL	CPA	MSEAL	RSEAL	- - - - - - - 65 64 63 62 61 60 - - - - - - - - - - - - - - 45 44 43 42 41 40 - 38 - - - 34 - - - - - - - - - - - 27 26 - - - - 21 20 19 - - - - - - - - - - - 11 10 9 - - 6 5 4 - - -	SALEABLE		345650003
MX123 CONN ASSY 73 CKT BLK OPT9 KEY A/44	345660974	C-HSG-A9	G-CAP-9-P	TPA-A9	RS	LS	MAL	CPA	MSEAL	RSEAL	72 71 - - 68 - 66 65 - 63 62 - - - 58 - - - - - - - 50 49 - 47 46 - - 43 42 - 40 - - - - - - - - 32 31 - 29 - - - - 24 23 - - 20 - 18 17 16 - - - - - - 9 - - 6 - 4 3 - 1	SALEABLE		345650003
MX123 CONN ASSY 73 CKT GRY OPT0 KEY B/47	345660994	C-HSG-B0	G-CAP-0-P	TPA-B0	RS	LS	MAL	CPA	MSEAL	RSEAL	- - - - - - - - - - 62 - 60 59 - - - - 54 53 - - - - - - - - - - 42 41 - 39 38 - - 35 34 33 - - 31 - - - 27 - - - 23 22 - 20 19 - 17 - 15 - - - 11 - - - 7 - - 4 3 2 1	SALEABLE		345650003
MX123 CONN ASSY 73 CKT BLK OPT0 KEY A/31	345661013	C-HSG-A0	G-CAP-0-P	TPA-A0	RS	LS	MAL	CPA	MSEAL	RSEAL	72 - 70 - - 67 66 - - - 62 - 60 - - - - 55 54 53 - 51 - - 48 - 46 45 44 43 42 - 40 39 - - - 35 - - - - - - - - - 26 25 - - 22 21 - - - - - 15 14 - - - - - 8 7 6 5 4 - - -	SALEABLE		345650003
MX123 CONN ASSY 73 CKT BLK OPT0 KEY A/34	345661023	C-HSG-A0	G-CAP-0-P	TPA-A0	RS	LS	MAL	CPA	MSEAL	RSEAL	72 71 - 69 68 - - - 64 63 62 61 60 59 - - 56 - - 53 52 51 - - 48 - 46 45 - - - - 40 - 38 - 36 - 34 33 - - 31 - 29 28 - 26 - - 23 22 - - - - - - - 14 - 12 11 - - - 7 - - 4 - - -	SALEABLE		345650003
MX123 CONN ASSY 73 CKT BLK OPT0 KEY A/32	345661033	C-HSG-A0	G-CAP-0-P	TPA-A0	RS	LS	MAL	CPA	MSEAL	RSEAL	- 71 - 69 68 - - - 64 63 62 61 60 59 - - 56 - - 53 52 51 - - 48 - 46 45 - - - - 40 - 38 - 36 - 34 33 - - 31 - 29 28 - - - - 23 22 - - - - - - - 14 - 12 11 - - - 7 - - 4 - - -	SALEABLE		345650003
MX123 CONN ASSY 73 CKT GRY OPT0 KEY B/30	345661043	C-HSG-B0	G-CAP-0-P	TPA-B0	RS	LS	MAL	CPA	MSEAL	RSEAL	72 - - 69 - 67 - - 64 63 62 61 60 - - - 56 55 - - 52 - - - - 47 - - 44 - 42 - - - - - - - 34 - - - - - 29 28 27 26 25 - - - 21 - 19 18 17 - 15 14 - - - - - - - - - - 3 2 1	SALEABLE		345650003
MX123 CONN ASSY 73 CKT GRY OPT0 KEY B/45	345661054	C-HSG-B0	G-CAP-0-P	TPA-B0	RS	LS	MAL	CPA	MSEAL	RSEAL	- - - - 68 67 66 65 64 - 62 - 60 59 - - - - 54 53 - - - - 48 47 46 - 44 - 42 - 40 39 - - - 35 34 - - - 31 - - - 27 - - - - - - - 19 - - - 15 14 - - 11 - - - - - - - 3 2 1	SALEABLE		345650003

molex

MX123 SEALED RCPT ASSY (73 Ckt)
BOM & PIN OUT SHEET

ASSEMBLY DESCRIPTION	ASSEMBLY PART NUMBER	CONNECTOR HOUSING	GROMMET CAP	TPA	RIGHT SLIDE	LEFT SLIDE	MATE ASSIST LEVER	CPA	MAT SEAL	RING SEAL	BLOCKED TERMINALS CAVITY WITH A NUMBER INDICATES BLOCKED TERMINAL POSITION CAVITY WITHOUT A NUMBER INDICATES OPEN TERMINAL POSITION	STATUS	COMMENTS	INTEGRAL COMPONENTS SOLD SEPARATELY DRESS COVER
MX123 CONN ASSY 73 CKT GRY OPT0 KEY B/50	345661063	C-HSG-B0	G-CAP-0-P	TPA-B0	RS	LS	MAL	CPA	MSEAL	RSEAL	72 71 70 69 68 67 66 - 64 63 62 61 - - 58 - - - 54 - 52 51 50 - - - 46 45 - 43 42 41 - - 38 - - - 34 - - 32 31 30 - - 27 26 25 - - 22 - 20 19 18 17 - 16 15 14 13 12 11 10 9 8 7 6 5 4 3 - 1	SALEABLE		345650003
MX123 CONN ASSY 73 CKT BLK OPT0 KEY A/28	345661073	C-HSG-A0	G-CAP-0-P	TPA-A0	RS	LS	MAL	CPA	MSEAL	RSEAL	- - - - - - - - - - 62 - 60 - - - - 55 - 53 52 51 - - - - 46 45 44 43 - - 40 39 - - - 35 - - - - - - - - - 25 - - 22 21 - - - 17 - - 15 14 - - - - - 8 7 6 5 4 3 2 1	SALEABLE		345650003
MX123 CONN ASSY 73 CKT GRY OPT0 KEY B/28	345661083	C-HSG-B0	G-CAP-0-P	TPA-B0	RS	LS	MAL	CPA	MSEAL	RSEAL	72 71 70 69 - - - - - 63 62 61 60 - - - 56 - - - 52 - - - - 47 - - 44 - - - - - - - 36 - 34 - - - - 29 28 27 - 25 - - - 21 - 19 18 17 - - 15 14 - 12 11 - - - - - - - - - 1	SALEABLE		345650003
MX123 CONN ASSY 73 CKT BLK OPT0 KEY A/40	345661093	C-HSG-A0	G-CAP-0-P	TPA-A0	RS	LS	MAL	CPA	MSEAL	RSEAL	72 71 - 69 - - - 65 64 63 62 61 60 59 - 57 - - - 53 52 51 50 - 48 - 46 45 - - - - 40 - 38 - - 35 - 33 - 32 - - 29 28 - 26 - - 23 22 - - - - 17 - 16 15 14 - 12 11 10 9 8 7 - - - - 2 -	SALEABLE		345650003
MX123 CONN ASSY 73 CKT GRY OPT9 KEY B/1	345661094	C-HSG-B9	G-CAP-9-P	TPA-B9	RS	LS	MAL	CPA	MSEAL	RSEAL	72 71 70 69 68 67 66 65 64 63 62 61 60 59 58 57 56 55 54 53 52 51 50 49 48 47 46 45 44 43 42 41 40 39 38 37 36 35 34 33 - 32 31 30 29 28 27 26 25 24 23 22 21 20 19 18 17 - 16 15 14 13 12 11 10 9 8 7 6 5 4 3 2 1	SALEABLE		345650003
MX123 CONN ASSY 73 CKT GRY OPT9 KEY B/46	345661104	C-HSG-B9	G-CAP-9-P	TPA-B9	RS	LS	MAL	CPA	MSEAL	RSEAL	- - - - 68 67 66 65 - - 62 - - 59 - - - - 54 53 - - - - 48 47 46 45 44 - - 41 40 39 - - - 35 34 - - - 31 - - - 27 - - - - - - - 19 18 17 - - 15 - - - - - - - - - - - 3 2 1	SALEABLE		345650003
MX123 CONN ASSY 73 CKT GRY OPT0 KEY B/40	345661114	C-HSG-B0	G-CAP-0-P	TPA-B0	RS	LS	MAL	CPA	MSEAL	RSEAL	- - - 69 68 67 66 65 - - 62 - 60 59 - - - - 54 53 - - - 49 48 47 46 45 44 - 42 41 40 39 - - - 35 34 33 - - 31 - - - 27 - - - - - - - 19 18 17 - - - - 12 11 - - - - - - - 3 2 1	SALEABLE		345650003
MX123 CONN ASSY 73 CKT BLK OPT0 KEY A/39	345661133	C-HSG-A0	G-CAP-0-P	TPA-A0	RS	LS	MAL	CPA	MSEAL	RSEAL	72 71 - 69 - - - 65 64 63 62 - 60 - - 57 - 56 - - 53 52 51 50 - 48 - 46 - - - - - 40 - 38 - 36 35 - 33 - 31 - 29 28 - 26 - - 23 22 - - - - 17 - 16 15 14 - 12 - 10 9 8 7 - - 4 - 2 -	SALEABLE		345650003
MX123 CONN ASSY 73 CKT BLK OPT0 KEY A/31	345661143	C-HSG-A0	G-CAP-0-P	TPA-A0	RS	LS	MAL	CPA	MSEAL	RSEAL	72 71 70 69 - 67 66 - 64 - 62 - 60 - - 57 - 55 54 - - 51 - 49 48 - 46 45 44 43 42 - 40 39 - - - - - - - - - - - - 26 - - - - - - - - - - - - - - - - - - 8 7 6 5 4 3 2 -	SALEABLE		345650003
MX123 CONN ASSY 73 CKT BLK OPT0 KEY A/42	345661153	C-HSG-A0	G-CAP-0-P	TPA-A0	RS	LS	MAL	CPA	MSEAL	RSEAL	72 71 - 69 68 - - - 64 63 62 61 60 59 - - 56 - 54 53 52 51 50 - 48 - 46 45 - - - - 40 - 38 - 36 35 34 33 - 31 - 29 28 - 26 - - - 22 - - - - 17 - 16 15 14 - 12 11 10 9 - 7 - - 4 - 2 -	SALEABLE		345650003
MX123 CONN ASSY 73 CKT BLK OPT0 KEY A/27	345661173	C-HSG-A0	G-CAP-0-P	TPA-A0	RS	LS	MAL	CPA	MSEAL	RSEAL	- - 70 - - 67 66 - - - - - - - - - 57 - 55 - 53 - 51 - - - - 46 - 44 43 - - 40 39 - - - 35 - - - - - - - - - - 25 - - 22 21 - - - - - - 15 14 - - - - - 8 7 6 5 4 3 2 1	SALEABLE		345650003
MX123 CONN ASSY 73 CKT GRY OPT0 KEY B/48	345661183	C-HSG-B0	G-CAP-0-P	TPA-B0	RS	LS	MAL	CPA	MSEAL	RSEAL	72 71 70 69 68 67 - - - 63 - 61 60 - 58 - 56 - 54 - 52 51 50 - - - 46 45 - 43 - 41 40 - 38 - 36 - 34 - - 32 31 30 - - 27 26 25 24 - 22 - 20 19 18 - - 16 15 14 13 - 11 10 - 8 - 6 5 4 3 2 1	SALEABLE		345650003

molex

MX123 SEALED RCPT ASSY (73 Ckt)
BOM & PIN OUT SHEET

ASSEMBLY DESCRIPTION	ASSEMBLY PART NUMBER	CONNECTOR HOUSING	GROMMET CAP	TPA	RIGHT SLIDE	LEFT SLIDE	MATE ASSIST LEVER	CPA	MAT SEAL	RING SEAL	BLOCKED TERMINALS CAVITY WITH A NUMBER INDICATES BLOCKED TERMINAL POSITION CAVITY WITHOUT A NUMBER INDICATES OPEN TERMINAL POSITION	STATUS	COMMENTS	INTEGRAL COMPONENTS SOLD SEPARATELY DRESS COVER
MX123 CONN ASSY 73 CKT BLK OPT0 KEY A/32	345661193	C-HSG-A0	G-CAP-0-P	TPA-A0	RS	LS	MAL	CPA	MSEAL	RSEAL	- - 70 - - - - 65 - - - 61 - - 58 57 56 55 - - - 51 50 - - 47 - 45 - - - 41 40 - 38 37 36 35 - - - - 31 30 - 28 - 26 25 24 - 22 21 20 19 18 - - 16 15 - - - - 10 - - - - - - - - -	SALEABLE		345650003
MX123 CONN ASSY 73 CKT BLK OPT0 KEY A/36	345661213	C-HSG-A0	G-CAP-0-P	TPA-A0	RS	LS	MAL	CPA	MSEAL	RSEAL	- - 70 - - - - 65 - - - 61 60 - 58 57 56 55 - - - 51 50 49 - 47 - 45 - - - 41 40 - 38 37 36 35 34 - - - 31 30 - 28 - 26 25 - - 22 21 20 19 18 - - 16 15 - - - - 10 - - 7 6 - - - - -	SALEABLE		345650003
MX123 CONN ASSY 73 CKT GRY OPT0 KEY B/48	345661223	C-HSG-B0	G-CAP-0-P	TPA-B0	RS	LS	MAL	CPA	MSEAL	RSEAL	72 71 70 69 68 - - - 64 - - 61 60 - 58 - 56 - 54 - 52 51 50 49 - 47 46 45 44 - - 41 40 - 38 - 36 - 34 - - 32 31 30 - 28 - - 25 24 - 22 - 20 19 18 - - 16 15 14 13 - 11 10 - 8 - 6 5 4 3 2 1	SALEABLE		345650003
MX123 CONN ASSY 73 CKT GRY OPT0 KEY B/52	345661233	C-HSG-B0	G-CAP-0-P	TPA-B0	RS	LS	MAL	CPA	MSEAL	RSEAL	72 71 70 69 68 67 66 - 64 63 - 61 60 - 58 - 56 - 54 - 52 51 50 49 - 47 - 45 44 43 - 41 40 - 38 - 36 - 34 - - 32 31 30 - 28 27 - 25 24 - 22 - 20 19 18 - - 16 15 14 13 - 11 10 - 8 - 6 5 4 3 2 1	SALEABLE		345650003
MX123 CONN ASSY 73 CKT GRY OPT0 KEY B/51	345661243	C-HSG-B0	G-CAP-0-P	TPA-B0	RS	LS	MAL	CPA	MSEAL	RSEAL	72 71 70 69 68 67 66 65 64 63 62 61 60 - 58 - 56 - 54 - 52 51 - 49 - 47 - 45 44 43 42 41 40 - 38 - 36 - 34 - - 32 31 30 - 28 27 26 25 24 - 22 - 20 19 18 - - 16 - 14 13 - 11 10 9 8 - - - - - 2 1	SALEABLE		345650003
MX123 CONN ASSY 73 CKT GRY OPT9 KEY B/55	345661253	C-HSG-B9	G-CAP-9-P	TPA-B9	RS	LS	MAL	CPA	MSEAL	RSEAL	72 71 70 69 68 67 66 - 64 63 62 61 - - 58 - 56 - 54 - 52 51 50 - - 47 - 45 44 43 42 41 - - 38 - 36 - 34 - - 32 31 30 29 28 27 26 25 - - 22 - 20 19 18 17 - 16 15 14 13 12 11 10 9 8 7 6 5 4 3 - 1	SALEABLE		345650003
MX123 CONN ASSY 73 CKT BLK OPT9 KEY A/32	345661263	C-HSG-A9	G-CAP-9-P	TPA-A9	RS	LS	MAL	CPA	MSEAL	RSEAL	- - 70 - - - - 65 - - - 61 60 - 58 57 - 55 54 - 52 51 - 49 - 47 - 45 - - - 41 40 - 38 37 - - 34 - - - 31 - - 28 - 26 25 - - 22 21 - 19 18 - - 16 15 - - - - 10 - - 7 6 - - - - -	SALEABLE		345650003
MX123 CONN ASSY 73 CKT BLK OPT0 KEY A/33	345661273	C-HSG-A0	G-CAP-0-P	TPA-A0	RS	LS	MAL	CPA	MSEAL	RSEAL	72 71 - - - 67 66 - - - 62 - 60 - - - - 55 54 53 - 51 - - - - 46 45 44 43 42 - 40 39 - - - 35 - - - - - - - - 26 25 - - 22 21 - - - 17 - 15 14 - - - - - 8 7 6 5 4 3 2 -	SALEABLE		345650003
MX123 CONN ASSY 73 CKT BLK OPT0 KEY A/28	345661283	C-HSG-A0	G-CAP-0-P	TPA-A0	RS	LS	MAL	CPA	MSEAL	RSEAL	- - - - - 67 - - - - 62 - 60 - - - - 55 - 53 - 51 - - - - 46 45 44 43 - - 40 39 - - - 35 - - - - - - - - - 25 - - 22 21 - - - 17 - 15 14 - - - - - 8 7 6 5 4 3 2 1	SALEABLE		345650003
MX123 CONN ASSY 73 CKT BLK OPT0 KEY A/38	345661293	C-HSG-A0	G-CAP-0-P	TPA-A0	RS	LS	MAL	CPA	MSEAL	RSEAL	72 71 70 69 - 67 66 - 64 - 62 - 60 - - 57 - 55 54 53 - 51 - 49 48 - 46 45 44 43 42 - 40 39 - - - 35 - - - - - - - - 26 25 - - 22 21 - - - - - 15 14 - - - - - 8 7 6 5 4 3 2 -	SALEABLE		345650003
MX123 CONN ASSY 73 CKT BLK OPT9 KEY A/73	345661303	C-HSG-A9	G-CAP-9-P	TPA-A9	RS	LS	MAL	CPA	MSEAL	RSEAL	- -	SALEABLE		345650003
MX123 CONN ASSY 73 CKT BLK OPT0 KEY A/4	345661323	C-HSG-A0	G-CAP-0-P	TPA-A0	RS	LS	MAL	CPA	MSEAL	RSEAL	- - - - - - - - - - 61 - 26 - - - - - - - - - - - - - - - 10 - - - - - - - - -	SALEABLE		345650003

molex

MX123 SEALED RCPT ASSY (73 Ckt)
BOM & PIN OUT SHEET

ASSEMBLY DESCRIPTION	ASSEMBLY PART NUMBER	CONNECTOR HOUSING	GROMMET CAP	TPA	RIGHT SLIDE	LEFT SLIDE	MATE ASSIST LEVER	CPA	MAT SEAL	RING SEAL	BLOCKED TERMINALS CAVITY WITH A NUMBER INDICATES BLOCKED TERMINAL POSITION CAVITY WITHOUT A NUMBER INDICATES OPEN TERMINAL POSITION	STATUS	COMMENTS	INTEGRAL COMPONENTS SOLD SEPARATELY DRESS COVER
MX123 CONN ASSY 73 CKT BLK OPT0 KEY A/36	345661333	C-HSG-A0	G-CAP-0-P	TPA-A0	RS	LS	MAL	CPA	MSEAL	RSEAL	72 71 - - - 67 66 - - 63 62 61 60 - - 57 - 55 54 53 - 51 - - 48 - 46 45 44 43 42 - 40 39 - - - 35 - 33 - - - - - - 26 25 24 - 22 21 - - - - - 15 14 - - - - - - 7 - 5 4 3 2 -	SALEABLE		345650003
MX123 CONN ASSY 73 CKT BLK OPT0 KEY A/31	345661343	C-HSG-A0	G-CAP-0-P	TPA-A0	RS	LS	MAL	CPA	MSEAL	RSEAL	- - 70 - 68 - 66 - - - 62 61 60 - - - - 55 54 53 52 51 - - - - 46 45 44 43 42 - 40 39 - - - 35 - 33 - - - - - - 26 25 24 - 22 21 - - - - - 15 14 - - - - - - 8 - - 5 - - 2 -	SALEABLE		345650003
MX123 CONN ASSY 73 CKT BLK OPT0 KEY A/38	345661363	C-HSG-A0	G-CAP-0-P	TPA-A0	RS	LS	MAL	CPA	MSEAL	RSEAL	- - 70 - - - - 65 - - - 61 60 - 58 57 56 55 54 - 52 51 50 49 - 47 - 45 - - - 41 40 - 38 37 36 35 34 - - 31 30 - 28 - 26 25 - - 22 21 20 19 18 - 16 15 - - - - 10 - - 7 6 - - - - -	SALEABLE		345650003
MX123 CONN ASSY 73 CKT GRY OPT0 KEY B/51	345661373	C-HSG-B0	G-CAP-0-P	TPA-B0	RS	LS	MAL	CPA	MSEAL	RSEAL	72 71 70 69 68 67 - - 64 63 - 61 60 - 58 - 56 - 54 - 52 51 50 49 - 47 - 45 44 43 - 41 40 - 38 - 36 - 34 - 32 31 30 - 28 27 - 25 24 - 22 - 20 19 18 - 16 15 14 13 - 11 10 - 8 - 6 5 4 3 2 1	SALEABLE		345650003
MX123 CONN ASSY 73 CKT GRY OPT0 KEY B/51	345661383	C-HSG-B0	G-CAP-0-P	TPA-B0	RS	LS	MAL	CPA	MSEAL	RSEAL	72 71 70 69 68 67 66 - 64 63 62 61 60 - - - 56 - 54 - 52 51 50 - - - - 45 44 43 42 41 40 - - - 36 - 34 - 32 31 30 - 28 27 26 25 24 - - - 20 19 18 - 16 15 14 13 - 11 10 9 8 - 6 5 4 3 2 1	SALEABLE		345650003
MX123 CONN ASSY 73 CKT BLK OPT0 KEY A/41	345661393	C-HSG-A0	G-CAP-0-P	TPA-A0	RS	LS	MAL	CPA	MSEAL	RSEAL	72 71 - 69 68 - - 65 64 63 62 - 60 59 - - 56 - - 53 52 51 50 49 48 - 46 - - - - - 40 - 38 - 36 35 - 33 - 31 - 29 28 - 26 - - 23 22 - - - - 17 16 15 14 - 12 - 10 9 8 7 - - 4 - 2 -	SALEABLE		345650003
MX123 CONN ASSY 73 CKT GRY OPT9 KEY B/73	345661403	C-HSG-B9	G-CAP-9-P	TPA-B9	RS	LS	MAL	CPA	MSEAL	RSEAL	- -	SALEABLE		345650003
MX123 CONN ASSY 73 CKT GRY OPT0 KEY B/25	345661423	C-HSG-B0	G-CAP-0-P	TPA-B0	RS	LS	MAL	CPA	MSEAL	RSEAL	72 71 70 69 - - - - 64 63 62 - - - - - 56 55 - - 52 - - - - - - - 44 - - - - - - - 36 - - - - - - 29 28 27 - 25 - - - - - 19 18 17 - - - - 12 11 - - - - - - - 3 2 1	SALEABLE		345650003
MX123 CONN ASSY 73 CKT GRY OPT0 KEY B/52	345661433	C-HSG-B0	G-CAP-0-P	TPA-B0	RS	LS	MAL	CPA	MSEAL	RSEAL	72 71 70 69 68 67 - 65 - 63 62 61 60 - 58 - 56 - 54 - 52 51 50 - - 47 - 45 44 43 42 41 40 - 38 - 36 - 34 - - 31 30 - 28 27 26 25 24 - 22 - 20 19 - - 16 15 14 13 - 11 10 9 8 - 6 5 4 3 2 1	SALEABLE		345650003
MX123 CONN ASSY 73 CKT GRY OPT0 KEY B/51	345661443	C-HSG-B0	G-CAP-0-P	TPA-B0	RS	LS	MAL	CPA	MSEAL	RSEAL	72 71 70 - - 67 - 65 64 63 62 61 60 - 58 - 56 - 54 - 52 51 50 - - 47 - 45 44 43 42 41 40 - 38 - 36 - 34 - 32 31 30 - 28 27 26 25 24 - 22 - 20 19 18 - 16 15 14 13 - - - 9 8 - 6 5 4 3 2 1	SALEABLE		345650003
MX123 CONN ASSY 73 CKT GRY OPT0 KEY B/47	345661453	C-HSG-B0	G-CAP-0-P	TPA-B0	RS	LS	MAL	CPA	MSEAL	RSEAL	72 71 70 69 68 67 - - - 63 - 61 60 - 58 - 56 - 54 - 52 51 50 - - - 46 45 - 43 - 41 40 - 38 - 36 - 34 - 32 31 30 - - 27 - 25 24 - 22 - 20 19 18 - 16 15 14 13 - 11 10 - 8 - 6 5 4 3 2 1	SALEABLE		345650003
MX123 CONN ASSY 73 CKT BLK OPT0 KEY A/31	345661463	C-HSG-A0	G-CAP-0-P	TPA-A0	RS	LS	MAL	CPA	MSEAL	RSEAL	72 71 70 - - 67 66 - - - - - - - 57 - 55 54 53 - 51 - - - - 46 - 44 43 42 - 40 39 - - - 35 - - - - - - - - 26 25 - - 22 21 - - - - - 15 14 - - - - - 8 7 6 5 4 3 2 -	SALEABLE		345650003

molex

MX123 SEALED RCPT ASSY (73 Ckt)
BOM & PIN OUT SHEET

ASSEMBLY DESCRIPTION	ASSEMBLY PART NUMBER	CONNECTOR HOUSING	GROMMET CAP	TPA	RIGHT SLIDE	LEFT SLIDE	MATE ASSIST LEVER	CPA	MAT SEAL	RING SEAL	BLOCKED TERMINALS CAVITY WITH A NUMBER INDICATES BLOCKED TERMINAL POSITION CAVITY WITHOUT A NUMBER INDICATES OPEN TERMINAL POSITION	STATUS	COMMENTS	INTEGRAL COMPONENTS SOLD SEPARATELY DRESS COVER
MX123 CONN ASSY 73 CKT BLK OPT0 KEY A/32	345661473	C-HSG-A0	G-CAP-0-P	TPA-A0	RS	LS	MAL	CPA	MSEAL	RSEAL	- - 70 - - - - 65 - - - 61 60 - 58 57 56 55 - - - 51 50 - - 47 - 45 - - - 41 40 - 38 37 36 35 - - - - 31 30 - 28 - 26 25 - - 22 21 20 19 18 - - 16 15 - - - - 10 - - - - - - - - -	SALEABLE		345650003
MX123 CONN ASSY 73 CKT BLK OPT0 KEY A/33	345661483	C-HSG-A0	G-CAP-0-P	TPA-A0	RS	LS	MAL	CPA	MSEAL	RSEAL	- - 70 - - 67 66 - - - 62 - 60 - - 57 - 55 54 53 - 51 - - 48 - 46 45 44 43 42 - 40 39 - - - 35 - - - - - - - - 26 25 - - 22 21 - - - - 15 14 - - - - - 8 7 6 5 4 3 2 -	SALEABLE		345650003
MX123 CONN ASSY 73 CKT GRY OPT0 KEY B/49	345661493	C-HSG-B0	G-CAP-0-P	TPA-B0	RS	LS	MAL	CPA	MSEAL	RSEAL	72 71 70 69 - 67 66 65 64 63 62 61 60 - - - 56 - 54 - 52 51 50 - - 47 - 45 44 43 42 41 40 - - - 36 - 34 - - 32 31 30 - 28 27 26 25 24 - - - 20 19 - - - 16 15 14 13 - - - 9 8 - 6 5 4 3 2 1	SALEABLE		345650003
MX123 CONN ASSY 73 CKT BLU OPT9 KEY C/73	345661503	C-HSG-C9	G-CAP-9-P	TPA-C9	RS	LS	MAL	CPA	MSEAL	RSEAL	- -	SALEABLE		345650003
MX123 CONN ASSY 73 CKT GRY OPT0 KEY B/55	345661513	C-HSG-B0	G-CAP-0-P	TPA-B0	RS	LS	MAL	CPA	MSEAL	RSEAL	72 71 70 69 68 67 66 - 64 63 62 61 60 - 58 - 56 - 54 - 52 51 50 - - 47 - 45 44 43 42 41 40 - 38 - 36 - 34 - - 32 31 30 - 28 27 26 25 24 - 22 - 20 19 18 - - 16 15 14 13 - 11 10 9 8 - 6 5 4 3 2 1	SALEABLE		345650003
MX123 CONN ASSY 73 CKT BLK OPT0 KEY A/34	345661523	C-HSG-A0	G-CAP-0-P	TPA-A0	RS	LS	MAL	CPA	MSEAL	RSEAL	72 71 - - - 67 66 - - 63 62 61 60 - - 57 - 55 - 53 - 51 - - 48 - 46 45 44 43 - - 40 39 - - - 35 - 33 - - - - 25 24 - 22 21 - - - - - 15 14 - - - - - - 7 6 5 4 3 2 -	SALEABLE		345650003
MX123 CONN ASSY 73 CKT BLK OPT0 KEY A/28	345661533	C-HSG-A0	G-CAP-0-P	TPA-A0	RS	LS	MAL	CPA	MSEAL	RSEAL	- - - - - 67 66 - - - 62 - 60 - - - - 55 54 53 - - - - 48 - 46 45 44 43 42 - 40 39 - - - 35 - - - - - - 26 25 - - 22 21 - - - - - 15 14 - - - - - 8 7 6 5 4 - - -	SALEABLE		345650003
MX123 CONN ASSY 73 CKT GRY OPT0 KEY B/53	345661543	C-HSG-B0	G-CAP-0-P	TPA-B0	RS	LS	MAL	CPA	MSEAL	RSEAL	72 71 70 - - 67 - 65 64 63 62 61 60 - 58 - 56 - 54 - 52 51 50 - - 47 - 45 44 43 42 41 40 - 38 - 36 - 34 - - 32 31 30 - 28 27 26 25 24 - 22 - 20 19 18 17 - 16 15 14 13 12 - - 9 8 - 6 5 4 3 2 1	SALEABLE		345650003
MX123 CONN ASSY 73 CKT BLK OPT0 KEY A/73	345661553	C-HSG-A0	G-CAP-0-P	TPA-A0	RS	LS	MAL	CPA	MSEAL	RSEAL	72 71 70 69 68 67 66 65 64 63 62 61 60 59 58 57 56 55 54 53 52 51 50 49 48 47 46 45 44 43 42 41 40 39 38 37 36 35 34 33 - 32 31 30 29 28 27 26 25 24 23 22 21 20 19 18 17 - 16 15 14 13 12 11 10 9 8 7 6 5 4 3 2 1	SALEABLE		345650003
MX123 CONN ASSY 73 CKT BLK OPT9 KEY A/73	345661563	C-HSG-A9	G-CAP-9-P	TPA-A9	RS	LS	MAL	CPA	MSEAL	RSEAL	72 71 70 69 68 67 66 65 64 63 62 61 60 59 58 57 56 55 54 53 52 51 50 49 48 47 46 45 44 43 42 41 40 39 38 37 36 35 34 33 - 32 31 30 29 28 27 26 25 24 23 22 21 20 19 18 17 - 16 15 14 13 12 11 10 9 8 7 6 5 4 3 2 1	SALEABLE		345650003
MX123 CONN ASSY 73 CKT BLK OPT0 KEY A/35	345661583	C-HSG-A0	G-CAP-0-P	TPA-A0	RS	LS	MAL	CPA	MSEAL	RSEAL	72 71 - 69 68 - - - 64 63 62 - 60 59 - - 56 - - 53 52 51 50 - 48 - 46 - - - - - 40 - 38 - 36 35 - 33 - - 31 - 29 28 - 26 - - 23 22 - - - - - - 16 - 14 - 12 - 10 - - 7 - - 4 - 2 -	SALEABLE		345650003
MX123 CONN ASSY 73 CKT GRY OPT0 KEY B/30	345661593	C-HSG-B0	G-CAP-0-P	TPA-B0	RS	LS	MAL	CPA	MSEAL	RSEAL	72 71 70 69 68 - 66 - 64 63 62 - - - - - 56 55 - - 52 - - - - - - - 44 - - 41 - - 38 - 36 35 - - - - - 29 28 27 - 25 - - - - - 19 18 17 - - - - 12 11 - - - - - - - 3 2 1	SALEABLE		345650003

molex

MX123 SEALED RCPT ASSY (73 Ckt)
BOM & PIN OUT SHEET

ASSEMBLY DESCRIPTION	ASSEMBLY PART NUMBER	CONNECTOR HOUSING	GROMMET CAP	TPA	RIGHT SLIDE	LEFT SLIDE	MATE ASSIST LEVER	CPA	MAT SEAL	RING SEAL	BLOCKED TERMINALS CAVITY WITH A NUMBER INDICATES BLOCKED TERMINAL POSITION CAVITY WITHOUT A NUMBER INDICATES OPEN TERMINAL POSITION	STATUS	COMMENTS	INTEGRAL COMPONENTS SOLD SEPARATELY DRESS COVER
MX123 CONN ASSY 73 CKT GRY OPT0 KEY B/51	345661623	C-HSG-B0	G-CAP-0-P	TPA-B0	RS	LS	MAL	CPA	MSEAL	RSEAL	72 71 70 69 68 67 - - 64 63 - 61 60 - 58 - 56 - 54 - 52 51 50 49 - - 46 45 44 43 - 41 40 - 38 - 36 - 34 - - 32 31 30 - 28 27 - 25 24 - 22 - 20 19 18 - - 16 15 14 13 - 11 10 - 8 - 6 5 4 3 2 1	SALEABLE		345650003
MX123 CONN ASSY 73 CKT GRY OPT0 KEY B/46	345661633	C-HSG-B0	G-CAP-0-P	TPA-B0	RS	LS	MAL	CPA	MSEAL	RSEAL	72 71 70 - - 67 - 65 64 63 62 61 60 - 58 - 56 - 54 - 52 51 - 49 - - 46 45 44 43 42 41 40 - 38 - 36 - 34 - - 32 31 30 - 28 27 26 25 24 - 22 - 20 19 18 - - 16 - 14 13 - - - 9 8 - - - - - 2 1	SALEABLE		345650003
MX123 CONN ASSY 73 CKT GRY OPT0 KEY B/46	345661643	C-HSG-B0	G-CAP-0-P	TPA-B0	RS	LS	MAL	CPA	MSEAL	RSEAL	72 71 70 - - 67 - 65 64 63 62 61 60 - 58 - 56 - 54 - 52 51 - 49 - 47 - 45 44 43 42 41 40 - 38 - 36 - 34 - - 32 31 30 - 28 27 26 25 24 - 22 - 20 19 18 - - 16 - 14 13 - - - 9 8 - - - - - 2 1	SALEABLE		345650003
MX123 CONN ASSY 73 CKT GRY OPT0 KEY B/50	345661653	C-HSG-B0	G-CAP-0-P	TPA-B0	RS	LS	MAL	CPA	MSEAL	RSEAL	72 71 70 69 68 67 - 65 64 63 62 61 60 - 58 - 56 - 54 - 52 51 - 49 - 47 - 45 44 43 42 41 40 - 38 - 36 - 34 - - 32 31 30 - 28 27 26 25 24 - 22 - 20 19 18 - - 16 - 14 13 - 11 10 9 8 - - - - - 2 1	SALEABLE		345650003
MX123 CONN ASSY 73 CKT GRY OPT0 KEY B/52	345661663	C-HSG-B0	G-CAP-0-P	TPA-B0	RS	LS	MAL	CPA	MSEAL	RSEAL	72 71 70 69 68 67 - 65 64 63 62 61 60 - 58 - 56 - 54 - 52 51 - 49 - 47 - 45 44 43 42 41 40 - 38 - 36 - 34 - - 32 31 30 - 28 27 26 25 24 - 22 - 20 19 18 17 - 16 - 14 13 12 11 10 9 8 - - - - - 2 1	SALEABLE		345650003
MX123 CONN ASSY 73 CKT BLK OPT0 KEY A/22	345661673	C-HSG-A0	G-CAP-0-P	TPA-A0	RS	LS	MAL	CPA	MSEAL	RSEAL	- - - - - - - - - - - 61 - - 58 57 56 - - - - 51 50 - - 47 46 - - - - - - - - 38 37 36 - - - - - 31 30 - 28 - 26 - - - 22 21 20 - - - - - 15 14 - - - 10 - - - - - - - - -	SALEABLE		345650003
MX123 CONN ASSY 73 CKT GRY OPT0 KEY B/39	345661683	C-HSG-B0	G-CAP-0-P	TPA-B0	RS	LS	MAL	CPA	MSEAL	RSEAL	72 71 70 69 68 - - 65 64 - 62 61 60 - - - - - 54 - 52 51 - - - 47 46 45 44 - 42 41 40 - - - - - 34 - - 32 31 30 - 28 - 26 25 24 - - - 20 19 18 17 - - - - 12 11 10 9 - - - - - - 2 1	SALEABLE		345650003
MX123 CONN ASSY 73 CKT GRY OPT0 KEY B/53	345661693	C-HSG-B0	G-CAP-0-P	TPA-B0	RS	LS	MAL	CPA	MSEAL	RSEAL	72 71 70 69 68 67 - 65 - 63 62 61 60 - 58 - 56 - 54 - 52 51 50 - - 47 - 45 44 43 42 41 40 - 38 - 36 - 34 - - - 31 30 - 28 27 26 25 24 - 22 - 20 19 18 - - 16 15 14 13 - 11 10 9 8 - 6 5 4 3 2 1	SALEABLE		345650003
MX123 CONN ASSY 73 CKT GRY OPT0 KEY B/21	345661713	C-HSG-B0	G-CAP-0-P	TPA-B0	RS	LS	MAL	CPA	MSEAL	RSEAL	72 - - 69 - 67 - - - - 62 61 - - - - - - - - 52 - - - - 47 - - 44 - 42 - - - - - - 34 - - - - 29 28 27 26 25 - - - 21 - - 18 17 - - 14 - - - - - - - - - - - - - 1	SALEABLE		345650003
MX123 CONN ASSY 73 CKT GRY OPT0 KEY B/28	345661723	C-HSG-B0	G-CAP-0-P	TPA-B0	RS	LS	MAL	CPA	MSEAL	RSEAL	72 - - 69 - 67 - - 64 63 62 61 - - - - 56 55 - - 52 - - - - 47 - - 44 - 42 - - - - - - 34 - - - - 29 28 27 26 25 - - - 21 - 19 18 17 - - 14 - - - - - - - - - - - 3 2 1	SALEABLE		345650003
MX123 CONN ASSY 73 CKT BLK OPT0 KEY A/35	345661733	C-HSG-A0	G-CAP-0-P	TPA-A0	RS	LS	MAL	CPA	MSEAL	RSEAL	72 71 - 69 - - - - 64 63 62 61 60 59 - - 56 - 54 53 52 51 50 - 48 - 46 45 - - - - 40 - 38 - 36 - 34 33 - - 31 - 29 28 - 26 - - 23 22 - - - - - - - 14 - 12 11 - - - 7 - - 4 - - -	SALEABLE		345650003
MX123 CONN ASSY 73 CKT BLK OPT0 KEY A/36	345661743	C-HSG-A0	G-CAP-0-P	TPA-A0	RS	LS	MAL	CPA	MSEAL	RSEAL	72 71 - 69 68 - - - 64 63 62 61 60 59 - - 56 - 54 53 52 51 50 - 48 - 46 45 - - - - 40 - 38 - 36 - 34 33 - - 31 - 29 28 - 26 - - 23 22 - - - - - - - 14 - 12 11 - - - 7 - - 4 - - -	SALEABLE		345650003

molex

MX123 SEALED RCPT ASSY (73 Ckt)
BOM & PIN OUT SHEET

ASSEMBLY DESCRIPTION	ASSEMBLY PART NUMBER	CONNECTOR HOUSING	GROMMET CAP	TPA	RIGHT SLIDE	LEFT SLIDE	MATE ASSIST LEVER	CPA	MAT SEAL	RING SEAL	BLOCKED TERMINALS CAVITY WITH A NUMBER INDICATES BLOCKED TERMINAL POSITION CAVITY WITHOUT A NUMBER INDICATES OPEN TERMINAL POSITION	STATUS	COMMENTS	INTEGRAL COMPONENTS SOLD SEPARATELY DRESS COVER
MX123 CONN ASSY 73 CKT BLK OPT0 KEY A/40	345661753	C-HSG-A0	G-CAP-0-P	TPA-A0	RS	LS	MAL	CPA	MSEAL	RSEAL	72 71 - 69 68 - - - 64 63 62 61 60 59 - - 56 - 54 53 52 51 50 - 48 - 46 45 - - - - 40 - 38 - 36 - 34 33 - - 31 30 29 28 - 26 - - 23 22 - - - - - 16 - 14 - 12 11 10 - - 7 - - 4 - 2 -	SALEABLE		345650003
MX123 CONN ASSY 73 CKT GRY OPT0 KEY B/31	345661763	C-HSG-B0	G-CAP-0-P	TPA-B0	RS	LS	MAL	CPA	MSEAL	RSEAL	72 71 70 69 68 - 66 - 64 63 62 - - - - - 56 55 - - 52 - - - - - - - 44 - 42 41 - - 38 - 36 35 - - - - - 29 28 27 - 25 - - - - - 19 18 17 - - - - 12 11 - - - - - - - 3 2 1	SALEABLE		345650003
MX123 CONN ASSY 73 CKT BLU OPT0 KEY C/41	345661773	C-HSG-C0	G-CAP-0-P	TPA-C0	RS	LS	MAL	CPA	MSEAL	RSEAL	- 71 - 69 68 - - 65 64 - - 61 60 - 58 - 56 55 54 - - - 50 49 48 47 - 45 - 43 - 41 - - 38 37 36 35 - - 32 31 - 29 28 - - - 24 23 - - - 19 18 17 16 - - 13 12 11 - - 8 7 - - - 3 2 1	SALEABLE		345650003
MX123 CONN ASSY 73 CKT BLU OPT0 KEY C/42	345661783	C-HSG-C0	G-CAP-0-P	TPA-C0	RS	LS	MAL	CPA	MSEAL	RSEAL	- 71 - 69 68 - - 65 64 - - 61 60 - 58 - 56 55 54 - - - 50 49 48 47 - 45 - 43 - 41 - - 38 37 36 35 - - 32 31 - 29 28 27 - - 24 23 - - - 19 18 17 16 - - 13 12 11 - - 8 7 - - - 3 2 1	SALEABLE		345650003
MX123 CONN ASSY 73 CKT BLK OPT0 KEY A/38	345661793	C-HSG-A0	G-CAP-0-P	TPA-A0	RS	LS	MAL	CPA	MSEAL	RSEAL	72 71 70 - 68 67 66 65 64 - - - 60 59 - - - - - - - - 50 - 48 47 46 45 - - - - 40 39 38 - - - - - - 31 30 - - - - 25 24 23 22 21 20 - - 17 - 15 14 - - - - 9 8 7 6 5 4 - 2 1	SALEABLE		345650003
MX123 CONN ASSY 73 CKT NAT OPT9 KEY F/73	345661803	C-HSG-F9	G-CAP-9-P	TPA-F9	RS	LS	MAL	CPA	MSEAL	RSEAL	- -	SALEABLE		345650003
MX123 CONN ASSY 73 CKT GRY OPT0 KEY B/24	345661813	C-HSG-B0	G-CAP-0-P	TPA-B0	RS	LS	MAL	CPA	MSEAL	RSEAL	- - - 69 - - - 65 64 63 - - - - - - - - - - - - - 49 - - - 45 44 43 - 22 21 20 19 18 17 - - - - 12 11 - - - 7 6 5 4 3 2 1	SALEABLE		345650003
MX123 CONN ASSY 73 CKT BLK OPT0 KEY A/25	345661823	C-HSG-A0	G-CAP-0-P	TPA-A0	RS	LS	MAL	CPA	MSEAL	RSEAL	- - - - - 67 - - - 63 62 - 60 - - 57 - 55 - - - 51 - - 48 - 46 45 44 43 - - 40 39 - - - 35 - - - - - - - - - 25 - - - - - - - - - - - 15 14 - - - - - - 7 6 5 4 3 2 -	SALEABLE		345650003
MX123 CONN ASSY 73 CKT BLK OPT0 KEY A/38	345661833	C-HSG-A0	G-CAP-0-P	TPA-A0	RS	LS	MAL	CPA	MSEAL	RSEAL	72 71 70 69 - 67 66 - 64 - 62 - 60 - - 57 - 55 54 53 - 51 - 49 48 - 46 45 44 43 42 - 40 39 - - - 35 - - - - - - - - 26 - - - 22 21 - - - - - 15 14 - - - - 9 8 7 6 5 4 3 2 -	SALEABLE		345650003
MX123 CONN ASSY 73 CKT BLK OPT0 KEY A/33	345661843	C-HSG-A0	G-CAP-0-P	TPA-A0	RS	LS	MAL	CPA	MSEAL	RSEAL	72 71 70 69 - 67 66 - 64 - 62 - 60 - - 57 - 55 54 - - 51 - 49 48 - 46 45 44 43 42 - 40 39 - - - - - - - - - - - - 26 25 - - - - - - - - - - - - - - - - 9 8 7 6 5 4 3 2 -	SALEABLE		345650003
MX123 CONN ASSY 73 CKT BLK OPT0 KEY A/22	345661853	C-HSG-A0	G-CAP-0-P	TPA-A0	RS	LS	MAL	CPA	MSEAL	RSEAL	- 71 - - - - 66 - 64 - 62 - - 59 58 - - - - - - 51 - - - - 46 45 - - 42 - - 39 38 - - - - - 32 31 - - - 27 26 - - 23 22 - - - - - - - 14 13 12 - - - - - - - - - - -	SALEABLE		345650003
MX123 CONN ASSY 73 CKT GRY OPT0 KEY B/56	345661863	C-HSG-B0	G-CAP-0-P	TPA-B0	RS	LS	MAL	CPA	MSEAL	RSEAL	72 71 70 69 - - - - - - 62 61 60 59 58 57 56 55 54 53 52 51 50 49 48 47 - - 44 - 42 41 40 39 38 37 36 35 34 33 - 31 - - - - 26 25 24 23 22 21 20 19 18 - - 15 14 13 12 11 - 9 8 7 6 5 4 3 2 1	SALEABLE		345650003

molex

MX123 SEALED RCPT ASSY (73 Ckt)
BOM & PIN OUT SHEET

ASSEMBLY DESCRIPTION	ASSEMBLY PART NUMBER	CONNECTOR HOUSING	GROMMET CAP	TPA	RIGHT SLIDE	LEFT SLIDE	MATE ASSIST LEVER	CPA	MAT SEAL	RING SEAL	BLOCKED TERMINALS CAVITY WITH A NUMBER INDICATES BLOCKED TERMINAL POSITION CAVITY WITHOUT A NUMBER INDICATES OPEN TERMINAL POSITION	STATUS	COMMENTS	INTEGRAL COMPONENTS SOLD SEPARATELY DRESS COVER
MX123 CONN ASSY 73 CKT BLU OPT0 KEY C/40	345661873	C-HSG-C0	G-CAP-0-P	TPA-C0	RS	LS	MAL	CPA	MSEAL	RSEAL	- 71 - 69 68 - - 65 64 - - 61 60 - 58 - 56 55 54 - - - 50 49 48 47 - 45 - 43 - 41 - - 38 37 36 35 - - - - 31 - 29 28 - - - 24 23 - - - 19 18 17 - 16 - - 13 12 11 - - 8 7 - - - 3 2 1	SALEABLE		345650003
MX123 CONN ASSY 73 CKT BLK OPT0 KEY A/34	345661883	C-HSG-A0	G-CAP-0-P	TPA-A0	RS	LS	MAL	CPA	MSEAL	RSEAL	72 71 - 69 - - - - 64 63 62 61 60 59 - - 56 - 54 53 52 51 50 - 48 - 46 45 - - - - - - 38 - 36 - 34 33 - 31 - 29 28 - 26 - - 23 22 - - - - - - - - 14 - 12 11 - - - 7 - - 4 - - -	SALEABLE		345650003
MX123 CONN ASSY 73 CKT BLU OPT0 KEY C/42	345661893	C-HSG-C0	G-CAP-0-P	TPA-C0	RS	LS	MAL	CPA	MSEAL	RSEAL	- 71 - 69 68 67 - 65 64 - 62 61 60 - 58 - 56 55 54 - - - 50 49 48 47 - 45 - 43 - 41 - - 38 37 36 35 - - - - 31 - 29 28 - - - 24 23 - - - 19 18 17 - 16 - - 13 12 11 - - 8 7 - - - 3 2 1	SALEABLE		345650003
MX123 CONN ASSY 73 CKT GRY OPT0 KEY B/42	345661913	C-HSG-B0	G-CAP-0-P	TPA-B0	RS	LS	MAL	CPA	MSEAL	RSEAL	- 71 - 69 - 67 - 65 64 63 62 61 - - 58 57 56 - - - - 51 - 49 - 47 - 45 44 43 42 41 - - 38 37 36 - - - - - - - - - - - - 23 22 21 20 19 18 17 - 15 14 13 12 11 - - - 7 6 5 4 3 2 1	SALEABLE		345650003
MX123 CONN ASSY 73 CKT BLK OPT0 KEY A/46	345661923	C-HSG-A0	G-CAP-0-P	TPA-A0	RS	LS	MAL	CPA	MSEAL	RSEAL	72 71 70 - 68 67 66 65 64 - 62 61 60 59 - 57 - - - - - - 50 - 48 47 46 45 - - - - 40 39 38 37 - - - - - 31 30 29 - 27 - 25 24 23 22 21 20 - - 17 - 15 14 13 - 11 - 9 8 7 6 5 4 - 2 1	SALEABLE		345650003
MX123 CONN ASSY 73 CKT BLK OPT0 KEY A/35	345661933	C-HSG-A0	G-CAP-0-P	TPA-A0	RS	LS	MAL	CPA	MSEAL	RSEAL	72 71 - 69 68 - - - 64 63 62 61 60 59 - - 56 - 54 53 52 51 50 - 48 - 46 45 - - - - - - 38 - 36 - 34 33 - 31 - 29 28 - 26 - - 23 22 - - - - - - - - 14 - 12 11 - - - 7 - - 4 - - -	SALEABLE		345650003
MX123 CONN ASSY 73 CKT BLK OPT0 KEY A/34	345661943	C-HSG-A0	G-CAP-0-P	TPA-A0	RS	LS	MAL	CPA	MSEAL	RSEAL	72 71 - 69 68 - - - 64 63 62 61 60 59 - - 56 - 54 53 52 - 50 - 48 - 46 45 - - - - - - 38 - 36 - 34 33 - 31 - 29 28 - 26 - - 23 22 - - - - - - - - 14 - 12 11 - - - 7 - - 4 - - -	SALEABLE		345650003
MX123 CONN ASSY 73 CKT BLU OPT0 KEY C/42	345661953	C-HSG-C0	G-CAP-0-P	TPA-C0	RS	LS	MAL	CPA	MSEAL	RSEAL	- 71 - 69 68 67 - 65 64 - 62 61 60 - 58 - 56 55 54 - - - 50 49 - - - 45 - 43 - 41 - - 38 37 36 35 - - - 32 31 - 29 28 27 - - 24 23 - - - 19 18 17 - 16 - - 13 12 11 - - 8 7 - - - 3 2 1	SALEABLE		345650003
MX123 CONN ASSY 73 CKT BLU OPT0 KEY C/44	345661963	C-HSG-C0	G-CAP-0-P	TPA-C0	RS	LS	MAL	CPA	MSEAL	RSEAL	- 71 - 69 68 67 - 65 64 - 62 61 60 - 58 - 56 55 54 - - - 50 49 48 47 - 45 - 43 - 41 - - 38 37 36 35 - - - 32 31 - 29 28 27 - - 24 23 - - - 19 18 17 - 16 - - 13 12 11 - - 8 7 - - - 3 2 1	SALEABLE		345650003
MX123 CONN ASSY 73 CKT BLK OPT0 KEY A/43	345661973	C-HSG-A0	G-CAP-0-P	TPA-A0	RS	LS	MAL	CPA	MSEAL	RSEAL	72 71 70 - 68 67 66 65 64 - 62 61 60 59 58 57 - - - - - - 50 - 48 47 46 45 - - - - 40 39 38 37 - - - - - 31 30 29 - 27 - 25 24 - 22 - 20 - - 17 - 15 14 13 - 11 - 9 - 7 6 - 4 - 2 1	SALEABLE		345650003
MX123 CONN ASSY 73 CKT GRY OPT0 KEY B/73	345661983	C-HSG-B0	G-CAP-0-P	TPA-B0	RS	LS	MAL	CPA	MSEAL	RSEAL	72 71 70 69 68 67 66 65 64 63 62 61 60 59 58 57 56 55 54 53 52 51 50 49 48 47 46 45 44 43 42 41 40 39 38 37 36 35 34 33 - 32 31 30 29 28 27 26 25 24 23 22 21 20 19 18 17 - 16 15 14 13 12 11 10 9 8 7 6 5 4 3 2 1	SALEABLE		345650003
MX123 CONN ASSY 73 CKT BLU OPT0 KEY C/73	345661993	C-HSG-C0	G-CAP-0-P	TPA-C0	RS	LS	MAL	CPA	MSEAL	RSEAL	72 71 70 69 68 67 66 65 64 63 62 61 60 59 58 57 56 55 54 53 52 51 50 49 48 47 46 45 44 43 42 41 40 39 38 37 36 35 34 33 - 32 31 30 29 28 27 26 25 24 23 22 21 20 19 18 17 - 16 15 14 13 12 11 10 9 8 7 6 5 4 3 2 1	SALEABLE		345650003

molex

MX123 SEALED RCPT ASSY (73 Ckt)
BOM & PIN OUT SHEET

ASSEMBLY DESCRIPTION	ASSEMBLY PART NUMBER	CONNECTOR HOUSING	GROMMET CAP	TPA	RIGHT SLIDE	LEFT SLIDE	MATE ASSIST LEVER	CPA	MAT SEAL	RING SEAL	BLOCKED TERMINALS CAVITY WITH A NUMBER INDICATES BLOCKED TERMINAL POSITION CAVITY WITHOUT A NUMBER INDICATES OPEN TERMINAL POSITION	STATUS	COMMENTS	INTEGRAL COMPONENTS SOLD SEPARATELY DRESS COVER
MX123 CONN ASSY 73 CKT BLK OPT0 KEY A/31	345662013	C-HSG-A0	G-CAP-0-P	TPA-A0	RS	LS	MAL	CPA	MSEAL	RSEAL	72 - - 69 68 67 66 - 64 63 62 61 - - - - 56 55 - - 52 - - - - 47 - - 44 - 42 - - - 38 - - - 34 - - - - - 29 28 27 26 25 - - - 21 - 19 18 17 - - 14 - - - - - - - - - - - 3 2 1	SALEABLE		345650003
MX123 CONN ASSY 73 CKT BLK OPT0 KEY A/38	345662023	C-HSG-A0	G-CAP-0-P	TPA-A0	RS	LS	MAL	CPA	MSEAL	RSEAL	72 71 - 69 - - - - 64 63 62 61 60 59 - - 56 - 54 53 52 51 50 - 48 - 46 45 - - - - 40 - 38 - 36 - 34 33 - 31 - 29 28 - 26 - - 23 22 - - - - - 16 - 14 - 12 11 10 - - 7 - - 4 - 2 -	SALEABLE		345650003
MX123 CONN ASSY 73 CKT BLK OPT0 KEY A/27	345662033	C-HSG-A0	G-CAP-0-P	TPA-A0	RS	LS	MAL	CPA	MSEAL	RSEAL	72 - - 69 68 67 66 - - 63 62 61 - - - - 56 - - - 52 - - - - 47 - - 44 - 42 - - - 38 - - - 34 - - - - 29 28 27 26 25 - - - 21 - 19 18 17 - - 14 - - - - - - - - - - - - - 1	SALEABLE		345650003
MX123 CONN ASSY 73 CKT BLK OPT0 KEY A/39	345662043	C-HSG-A0	G-CAP-0-P	TPA-A0	RS	LS	MAL	CPA	MSEAL	RSEAL	72 71 - 69 68 - - - 64 63 62 61 60 59 - - 56 - 54 53 52 51 50 - 48 - 46 45 - - - - 40 - 38 - 36 - 34 33 - 31 - 29 28 - 26 - - 23 22 - - - - - 16 - 14 - 12 11 10 - - 7 - - 4 - 2 -	SALEABLE		345650003
MX123 CONN ASSY 73 CKT GRY OPT0 KEY B/41	345662053	C-HSG-B0	G-CAP-0-P	TPA-B0	RS	LS	MAL	CPA	MSEAL	RSEAL	72 71 - 69 - - - - 64 63 62 61 60 59 - - 56 - 54 53 52 51 50 - 48 - 46 45 - - - 40 - 38 - 36 35 34 33 - 31 - 29 28 - 26 - - - 22 - - - - 17 16 15 14 - 12 11 10 9 - 7 - - 4 - 2 -	SALEABLE		345650003
MX123 CONN ASSY 73 CKT BLK OPT0 KEY A/37	345662093	C-HSG-A0	G-CAP-0-P	TPA-A0	RS	LS	MAL	CPA	MSEAL	RSEAL	72 71 70 69 - 67 66 - 64 - 62 - 60 - - 57 - 55 54 53 - 51 - 49 48 - 46 45 44 43 42 - 40 39 - - - 35 - - - - - - - - 26 - - - 22 21 - - - - - 15 14 - - - - - 8 7 6 5 4 3 2 -	SALEABLE		345650003
MX123 CONN ASSY 73 CKT GRY OPT0 KEY B/27	345662133	C-HSG-B0	G-CAP-0-P	TPA-B0	RS	LS	MAL	CPA	MSEAL	RSEAL	72 - - 69 68 67 66 - - 63 62 61 - - - - 56 - - - 52 - - - - 47 - - 44 - 42 - - - 38 - - - 34 - - - - 29 28 27 26 25 - - - 21 - 19 18 17 - - 14 - - - - - - - - - - - - - 1	SALEABLE		345650003
MX123 CONN ASSY 73 CKT GRY OPT0 KEY B/31	345662143	C-HSG-B0	G-CAP-0-P	TPA-B0	RS	LS	MAL	CPA	MSEAL	RSEAL	72 - - 69 68 67 66 - 64 63 62 61 - - - - 56 55 - - 52 - - - - 47 - - 44 - 42 - - - 38 - - - 34 - - - - 29 28 27 26 25 - - - 21 - 19 18 17 - - 14 - - - - - - - - - - - 3 2 1	SALEABLE		345650003
MX123 CONN ASSY 73 CKT BLK OPT0 KEY A/41	345662153	C-HSG-A0	G-CAP-0-P	TPA-A0	RS	LS	MAL	CPA	MSEAL	RSEAL	72 71 - 69 - - - - 64 63 62 61 60 59 - - 56 - 54 53 52 51 50 - 48 - 46 45 - - - 40 - 38 - 36 35 34 33 - 31 - 29 28 - 26 - - - 22 - - - - 17 16 15 14 - 12 11 10 9 - 7 - - 4 - 2 -	SALEABLE		345650003
MX123 CONN ASSY 73 CKT BLK OPT0 KEY A/40	345662163	C-HSG-A0	G-CAP-0-P	TPA-A0	RS	LS	MAL	CPA	MSEAL	RSEAL	72 71 - 69 68 - - 65 64 63 62 - 60 59 - 57 56 - - 53 52 51 50 - 48 - 46 - - - - - 40 - 38 - 36 35 - 33 - 31 30 29 28 - 26 25 - 23 22 - - - - - 16 - 14 - 12 - 10 - 8 7 - - 4 - 2 -	SALEABLE		345650003
MX123 CONN ASSY 73 CKT BLK OPT0 KEY A/36	345662173	C-HSG-A0	G-CAP-0-P	TPA-A0	RS	LS	MAL	CPA	MSEAL	RSEAL	72 71 - 69 68 - - - 64 63 62 - 60 59 - 57 56 - - 53 52 51 50 - 48 - 46 - - - - - 40 - 38 - 36 35 - 33 - 31 - 29 28 - 26 - - 23 22 - - - - - 16 - 14 - 12 - 10 - - 7 - - 4 - 2 -	SALEABLE		345650003
MX123 CONN ASSY 73 CKT BLK OPT0 KEY A/44	345662183	C-HSG-A0	G-CAP-0-P	TPA-A0	RS	LS	MAL	CPA	MSEAL	RSEAL	72 71 - 69 68 - - 65 64 63 62 61 60 59 - - 56 - 54 53 52 51 50 - 48 - 46 45 - - - - 40 - 38 - 36 35 34 33 - 31 30 29 28 - 26 25 - 23 22 - - - - - 16 - 14 - 12 11 10 - 8 7 - - 4 - 2 -	SALEABLE		345650003

molex

MX123 SEALED RCPT ASSY (73 Ckt)
BOM & PIN OUT SHEET

ASSEMBLY DESCRIPTION	ASSEMBLY PART NUMBER	CONNECTOR HOUSING	GROMMET CAP	TPA	RIGHT SLIDE	LEFT SLIDE	MATE ASSIST LEVER	CPA	MAT SEAL	RING SEAL	BLOCKED TERMINALS CAVITY WITH A NUMBER INDICATES BLOCKED TERMINAL POSITION CAVITY WITHOUT A NUMBER INDICATES OPEN TERMINAL POSITION	STATUS	COMMENTS	INTEGRAL COMPONENTS SOLD SEPARATELY DRESS COVER
MX123 CONN ASSY 73 CKT BLK OPT0 KEY A/40	345662193	C-HSG-A0	G-CAP-0-P	TPA-A0	RS	LS	MAL	CPA	MSEAL	RSEAL	72 71 - 69 68 - - - 64 63 62 61 60 59 - - 56 - 54 53 52 51 50 - 48 - 46 45 - - - - 40 - 38 - 36 35 34 33 - - 31 - 29 28 - 26 - - 23 22 - - - - - - 16 - 14 - 12 11 10 - - 7 - - 4 - 2 -	SALEABLE		345650003
MX123 CONN ASSY 73 CKT BLK OPT0 KEY A/24	345662223	C-HSG-A0	G-CAP-0-P	TPA-A0	RS	LS	MAL	CPA	MSEAL	RSEAL	- - - - - - - 65 - - - 61 - - 58 57 56 - - - - 51 50 - - 47 - 45 - - - 41 - - 38 37 36 - - - - 31 30 - 28 - 26 25 - - 22 21 20 - - - - 15 - - - - 10 - - - - - - - - -	SALEABLE		345650003
MX123 CONN ASSY 73 CKT BLK OPT0 KEY A/48	345662233	C-HSG-A0	G-CAP-0-P	TPA-A0	RS	LS	MAL	CPA	MSEAL	RSEAL	72 71 70 - 68 67 66 65 64 - 62 61 60 59 - 57 - 55 - 53 - - 50 - 48 47 46 45 - - - - 40 39 38 37 - - - - - 31 30 29 - 27 - 25 24 23 22 21 20 - - 17 - 15 14 13 - 11 - 9 8 7 6 5 4 - 2 1	SALEABLE		345650003
MX123 CONN ASSY 73 CKT BLK OPT0 KEY A/24	345662253	C-HSG-A0	G-CAP-0-P	TPA-A0	RS	LS	MAL	CPA	MSEAL	RSEAL	- - - - - 67 - - - - 62 - 60 - - 57 - 55 - - - 51 - - 48 - 46 45 44 43 - - 40 39 - - - 35 - - - - - - - - - 25 - - - - - - - - - - 15 14 - - - - - - 7 6 5 4 3 2 -	SALEABLE		345650003
MX123 CONN ASSY 73 CKT BLK OPT0 KEY A/44	345662263	C-HSG-A0	G-CAP-0-P	TPA-A0	RS	LS	MAL	CPA	MSEAL	RSEAL	72 71 70 - 68 67 66 65 64 - 62 61 60 59 - 57 - - - - - - - - 48 47 46 45 - - - - 40 39 38 37 - - - - - 31 30 29 - 27 - 25 24 23 22 21 20 - - 17 - 15 - 13 - 11 - 9 8 7 6 5 4 - 2 1	SALEABLE		345650003
MX123 CONN ASSY 73 CKT BLK OPT0 KEY A/36	345662273	C-HSG-A0	G-CAP-0-P	TPA-A0	RS	LS	MAL	CPA	MSEAL	RSEAL	72 71 70 - 68 67 66 65 64 - - - 60 59 - - - - - - - - - - 48 47 46 45 - - - - 40 39 38 - - - - - - 31 30 - - - - 25 24 23 22 21 20 - - 17 - 15 - - - - - 9 8 7 6 5 4 - 2 1	SALEABLE		345650003
MX123 CONN ASSY 73 CKT GRY OPT0 KEY B/52	345662283	C-HSG-B0	G-CAP-0-P	TPA-B0	RS	LS	MAL	CPA	MSEAL	RSEAL	72 71 70 69 - - - - - - 62 61 60 59 58 57 56 - 54 53 52 51 50 - - 47 - - - - 42 41 40 39 38 37 36 35 34 33 - 31 - - - - 26 25 24 23 22 21 20 19 18 - - 15 14 13 12 11 - 9 8 7 6 5 4 3 2 1	SALEABLE		345650003
MX123 CONN ASSY 73 CKT BLU OPT0 KEY C/44	345662293	C-HSG-C0	G-CAP-0-P	TPA-C0	RS	LS	MAL	CPA	MSEAL	RSEAL	- 71 - - - 67 - 65 64 - 62 61 60 - 58 - 56 55 54 - - - 50 49 - - - 45 - 43 - 41 - - 38 37 36 35 - - 32 31 - 29 28 27 - - 24 23 - - 20 19 18 17 16 - - 13 12 11 - - 8 7 - 5 4 3 2 1	SALEABLE		345650003
MX123 CONN ASSY 73 CKT BLU OPT0 KEY C/47	345662313	C-HSG-C0	G-CAP-0-P	TPA-C0	RS	LS	MAL	CPA	MSEAL	RSEAL	- 71 - 69 - 67 - 65 64 - 62 61 60 - 58 - 56 55 54 - - - 50 49 48 47 - 45 - 43 - 41 - - 38 37 36 35 - - 32 31 - 29 28 27 - - 24 23 - - 20 19 18 17 16 - - 13 12 11 - - 8 7 - 5 4 3 2 1	SALEABLE		345650003
MX123 CONN ASSY 73 CKT BLU OPT0 KEY C/41	345662323	C-HSG-C0	G-CAP-0-P	TPA-C0	RS	LS	MAL	CPA	MSEAL	RSEAL	- 71 - 69 - 67 - 65 64 - 62 61 60 - 58 - 56 55 54 - - - 50 49 - - - 45 - 43 - 41 - - 38 37 36 35 - - 32 31 - 29 28 27 - - 24 23 - - - 19 18 17 16 - - 13 12 11 - - 8 7 - - - 3 2 1	SALEABLE		345650003
MX123 CONN ASSY 73 CKT BLK OPT0 KEY A/33	345662333	C-HSG-A0	G-CAP-0-P	TPA-A0	RS	LS	MAL	CPA	MSEAL	RSEAL	72 - 70 - - 67 66 - - - 62 - 60 - 58 - - 55 54 53 - 51 - - 48 - 46 45 44 43 42 - 40 - - - - 35 - - - - - - - - - 26 25 - - - 21 - - - 17 - 15 14 - - - - - 8 7 6 5 4 3 2 -	SALEABLE		345650003
MX123 CONN ASSY 73 CKT BLK OPT0 KEY A/36	345662343	C-HSG-A0	G-CAP-0-P	TPA-A0	RS	LS	MAL	CPA	MSEAL	RSEAL	- 71 - 69 - - - - 64 63 62 61 60 59 - - 56 - 54 53 52 51 50 - 48 - 46 45 - - - - 40 - 38 - 36 - 34 33 - 31 - 29 28 - 26 - - 23 22 - - - - - 16 - - - 12 11 10 - - 7 - - 4 - 2 -	SALEABLE		345650003

molex

MX123 SEALED RCPT ASSY (73 Ckt)
BOM & PIN OUT SHEET

ASSEMBLY DESCRIPTION	ASSEMBLY PART NUMBER	CONNECTOR HOUSING	GROMMET CAP	TPA	RIGHT SLIDE	LEFT SLIDE	MATE ASSIST LEVER	CPA	MAT SEAL	RING SEAL	BLOCKED TERMINALS CAVITY WITH A NUMBER INDICATES BLOCKED TERMINAL POSITION CAVITY WITHOUT A NUMBER INDICATES OPEN TERMINAL POSITION	STATUS	COMMENTS	INTEGRAL COMPONENTS SOLD SEPARATELY DRESS COVER
MX123 CONN ASSY 73 CKT BLK OPT0 KEY A/37	345662353	C-HSG-A0	G-CAP-0-P	TPA-A0	RS	LS	MAL	CPA	MSEAL	RSEAL	- 71 - 69 68 - - - 64 63 62 61 60 59 - - 56 - 54 53 52 51 50 - 48 - 46 45 - - - - 40 - 38 - 36 - 34 33 - - 31 - 29 28 - 26 - - 23 22 - - - - - 16 - - - 12 11 10 - - 7 - - 4 - 2 -	SALEABLE		345650003
MX123 CONN ASSY 73 CKT BLU OPT0 KEY C/39	345662363	C-HSG-C0	G-CAP-0-P	TPA-C0	RS	LS	MAL	CPA	MSEAL	RSEAL	- 71 - 69 68 - - 65 64 - - 61 60 - 58 - 56 55 54 - - - 50 49 48 47 - 45 - 43 - 41 - - - 37 36 35 - - - 31 - 29 28 - - - 24 23 - - - 19 18 17 16 - - 13 12 11 - - 8 7 - - - 3 2 1	SALEABLE		345650003
MX123 CONN ASSY 73 CKT GRY OPT0 KEY B/21	345662373	C-HSG-B0	G-CAP-0-P	TPA-B0	RS	LS	MAL	CPA	MSEAL	RSEAL	72 71 70 69 - - - - - 63 62 - - - - - 56 - - - 52 - - - - - - - 44 - - - - - - - 36 - - - - - - 29 28 27 - 25 - - - - - 19 18 17 - - - - 12 11 - - - - - - - - - 1	SALEABLE		345650003
MX123 CONN ASSY 73 CKT GRY OPT0 KEY B/50	345662383	C-HSG-B0	G-CAP-0-P	TPA-B0	RS	LS	MAL	CPA	MSEAL	RSEAL	72 71 70 69 68 67 66 - 64 63 62 61 60 - 58 - 56 - 54 - 52 51 - - - 47 - 45 44 43 42 41 40 - 38 - 36 - 34 - 32 31 30 - 28 27 26 25 - - 22 - 20 19 18 17 16 - 14 13 12 11 10 9 8 - - - - - 2 1	SALEABLE		345650003
MX123 CONN ASSY 73 CKT GRY OPT0 KEY B/50	345662393	C-HSG-B0	G-CAP-0-P	TPA-B0	RS	LS	MAL	CPA	MSEAL	RSEAL	72 71 70 69 68 67 66 65 64 63 62 61 60 - 58 - 56 - 54 - 52 51 - - - 47 - 45 44 43 42 41 40 - 38 - 36 - 34 - 32 31 30 - 28 27 26 25 24 - 22 - 20 19 18 - 16 - 14 13 - 11 10 9 8 - - - - - 2 1	SALEABLE		345650003
MX123 CONN ASSY 73 CKT BLK OPT0 KEY A/38	345662413	C-HSG-A0	G-CAP-0-P	TPA-A0	RS	LS	MAL	CPA	MSEAL	RSEAL	72 71 - 69 68 - - - 64 63 62 61 60 59 - - 56 - 54 53 52 51 50 - 48 - 46 45 - - - - 40 - 38 - 36 - 34 33 - - 31 - 29 28 - 26 - - 23 22 - - - - - 16 - - - 12 11 10 - - 7 - - 4 - 2 -	SALEABLE		345650003
											72 71 70 69 68 67 66 65 64 - 62 61 60 59 - - - - - -			
MX123 CONN ASSY 73 CKT BLK OPT0 KEY A/44	345662423	C-HSG-A0	G-CAP-0-P	TPA-A0	RS	LS	MAL	CPA	MSEAL	RSEAL	- - 50 - 48 47 46 45 - - - - 40 39 38 37 - - - - - 31 30 29 - 27 - 25 24 23 22 21 20 - - 17 - 15 14 13 - 11 - 9 8 - - 5 4 - 2 1	SALEABLE		345650003
MX123 CONN ASSY 73 CKT BLK OPT0 KEY A/44	345662433	C-HSG-A0	G-CAP-0-P	TPA-A0	RS	LS	MAL	CPA	MSEAL	RSEAL	72 71 70 - 68 67 66 65 64 - 62 61 60 59 58 57 - - - - - - 50 - 48 47 46 45 - - - - 40 39 38 37 - - - - - 31 30 29 - 27 - 25 24 - 22 21 20 - - 17 - 15 14 13 - 11 - 9 8 - - 5 4 - 2 1	SALEABLE		345650003
MX123 CONN ASSY 73 CKT BLU OPT0 KEY C/40	345662443	C-HSG-C0	G-CAP-0-P	TPA-C0	RS	LS	MAL	CPA	MSEAL	RSEAL	- 71 - 69 - 67 - 65 64 - 62 61 60 - 58 - 56 55 54 - - - 50 49 - - - 45 - 43 42 41 - - 38 37 36 35 - - - 31 - 29 28 27 - - 24 23 - - - 19 18 17 16 - - - 12 11 - - 8 7 - - - 3 2 1	SALEABLE		345650003
MX123 CONN ASSY 73 CKT BLK OPT0 KEY A/36	345662453	C-HSG-A0	G-CAP-0-P	TPA-A0	RS	LS	MAL	CPA	MSEAL	RSEAL	72 - 70 - 68 67 66 - - - 62 61 60 59 - - - - - - - - 50 - 48 47 46 - - - - - 40 39 38 - - - - - - 31 - 29 - 27 - 25 24 - 22 21 20 - - 17 - 15 14 13 - 11 - 9 8 - - 5 4 - 2 1	SALEABLE		345650003
MX123 CONN ASSY 73 CKT BLK OPT0 KEY A/36	345662463	C-HSG-A0	G-CAP-0-P	TPA-A0	RS	LS	MAL	CPA	MSEAL	RSEAL	72 - 70 - 68 67 66 - - - 62 61 60 59 58 - - - - - - - 50 - 48 47 46 - - - - - 40 39 38 - - - - - - 31 - - - 27 - 25 24 - 22 21 20 - - 17 - 15 14 13 - 11 - 9 8 - - 5 4 - 2 1	SALEABLE		345650003
MX123 CONN ASSY 73 CKT BLK OPT0 KEY A/37	345662473	C-HSG-A0	G-CAP-0-P	TPA-A0	RS	LS	MAL	CPA	MSEAL	RSEAL	72 71 - 69 - - - - 64 63 62 61 60 59 - - 56 - 54 53 52 51 50 - 48 - 46 45 - - - - 40 - 38 - 36 - 34 33 - - 31 - 29 28 - 26 - - 23 22 - - - - - 16 - - - 12 11 10 - - 7 - - 4 - 2 -	SALEABLE		345650003

molex

MX123 SEALED RCPT ASSY (73 Ckt)
BOM & PIN OUT SHEET

ASSEMBLY DESCRIPTION	ASSEMBLY PART NUMBER	CONNECTOR HOUSING	GROMMET CAP	TPA	RIGHT SLIDE	LEFT SLIDE	MATE ASSIST LEVER	CPA	MAT SEAL	RING SEAL	BLOCKED TERMINALS CAVITY WITH A NUMBER INDICATES BLOCKED TERMINAL POSITION CAVITY WITHOUT A NUMBER INDICATES OPEN TERMINAL POSITION	STATUS	COMMENTS	INTEGRAL COMPONENTS SOLD SEPARATELY DRESS COVER
MX123 CONN ASSY 73 CKT BLK OPT0 KEY A/36	345662483	C-HSG-A0	G-CAP-0-P	TPA-A0	RS	LS	MAL	CPA	MSEAL	RSEAL	72 71 70 - 68 67 66 65 64 - - - 60 59 - - - - - - - - 50 - 48 47 46 45 - - - - 40 39 38 - - - - - - - 31 30 - - - - 25 24 - 22 21 20 - - 17 - - 15 14 - - - - 9 - 7 6 5 4 - 2 1	SALEABLE		345650003
MX123 CONN ASSY 73 CKT GRY OPT0 KEY B/23	345662493	C-HSG-B0	G-CAP-0-P	TPA-B0	RS	LS	MAL	CPA	MSEAL	RSEAL	- - - 69 - - - 65 64 63 - - - - - - - - - - - - 49 - - - 45 44 43 - - - - - - - - - - - - - - - - - - - 23 22 21 20 19 18 - - - - - 12 11 - 9 - 7 6 5 4 3 - -	SALEABLE		345650003
MX123 CONN ASSY 73 CKT BLK OPT0 KEY A/33	345662503	C-HSG-A0	G-CAP-0-P	TPA-A0	RS	LS	MAL	CPA	MSEAL	RSEAL	- - 70 - - - - 65 - - - 61 60 - 58 57 - 55 54 - 52 51 - 49 - 47 - 45 - - - 41 40 - 38 37 - - 34 - - 31 - - 28 - 26 25 24 - 22 21 - 19 18 - 16 15 - - - - 10 - - 7 6 - - - - -	SALEABLE		345650003
MX123 CONN ASSY 73 CKT BLU OPT0 KEY C/37	345662513	C-HSG-C0	G-CAP-0-P	TPA-C0	RS	LS	MAL	CPA	MSEAL	RSEAL	- 71 - 69 - - - 65 64 - - 61 60 - 58 - 56 55 54 - - - 50 49 - - - 45 - 43 - 41 - - 38 37 36 35 - - - 31 - 29 28 - - - 24 23 - - - 19 18 17 16 - - 13 12 11 - - 8 7 - - - 3 2 1	SALEABLE		345650003
MX123 CONN ASSY 73 CKT BLK OPT0 KEY A/21	345662523	C-HSG-A0	G-CAP-0-P	TPA-A0	RS	LS	MAL	CPA	MSEAL	RSEAL	- - - - - - - - - - 61 - - 58 57 56 - - - - 51 50 - - 47 46 - - - - - - 38 37 36 - - - - 31 30 - - - 26 - - - 22 21 20 - - - - 15 14 - - - 10 - - - - - - - - -	SALEABLE		345650003
MX123 CONN ASSY 73 CKT GRY OPT0 KEY B/34	345662533	C-HSG-B0	G-CAP-0-P	TPA-B0	RS	LS	MAL	CPA	MSEAL	RSEAL	72 71 70 69 68 - - - 64 - 62 61 60 - - - - - 54 - 52 51 - - - 47 - - 44 - 42 41 40 - - - - - - - 32 31 30 - 28 - 26 25 24 - - - 20 19 - 17 - - - - 12 11 10 9 - - - - - - 2 1	SALEABLE		345650003
MX123 CONN ASSY 73 CKT BLU OPT0 KEY C/45	345662543	C-HSG-C0	G-CAP-0-P	TPA-C0	RS	LS	MAL	CPA	MSEAL	RSEAL	- 71 - 69 68 67 - 65 64 - 62 61 60 - 58 - 56 55 54 - - - 50 49 48 47 - 45 - 43 - 41 - - 38 37 36 35 - - - 31 - 29 28 - - - 24 23 - - 20 19 18 17 16 - - 13 12 11 - - 8 7 - 5 4 3 2 1	SALEABLE		345650003
MX123 CONN ASSY 73 CKT GRY OPT9 KEY B/24	345662553	C-HSG-B9	G-CAP-9-P	TPA-B9	RS	LS	MAL	CPA	MSEAL	RSEAL	- - - 69 - - - 65 64 63 - - - - - - - - - - - - 49 - - - 45 44 43 - - - - - - - - - - - - - - - - - - - 22 21 20 19 18 17 - - - - 12 11 - - - 7 6 5 4 3 2 1	SALEABLE		345650003
MX123 CONN ASSY 73 CKT BLK OPT9 KEY A/36	345662563	C-HSG-A9	G-CAP-9-P	TPA-A9	RS	LS	MAL	CPA	MSEAL	RSEAL	72 71 70 - 68 67 66 65 64 - - - 60 59 - - - - - - - - - - 48 47 46 45 - - - - 40 39 38 - - - - - - 31 30 - - - - 25 24 23 22 21 20 - - 17 - 15 - - - - - 9 8 7 6 5 4 - 2 1	SALEABLE		345650003
MX123 CONN ASSY 73 CKT BLU OPT9 KEY C/42	345662573	C-HSG-C9	G-CAP-9-P	TPA-C9	RS	LS	MAL	CPA	MSEAL	RSEAL	- 71 - 69 68 - - 65 64 - - 61 60 - 58 - 56 55 54 - - - 50 49 48 47 - 45 - 43 - 41 - - 38 37 36 35 - - 32 31 - 29 28 27 - - 24 23 - - - 19 18 17 16 - - 13 12 11 - - 8 7 - - - 3 2 1	SALEABLE		345650003
MX123 CONN ASSY 73 CKT BLK OPT0 KEY A/43	345662583	C-HSG-A0	G-CAP-0-P	TPA-A0	RS	LS	MAL	CPA	MSEAL	RSEAL	72 71 70 - 68 67 66 65 64 - - - 61 - 57 - - - - - - - - 48 47 46 45 - - - - 40 - 38 37 - - - - - 31 30 29 - 27 - 25 24 23 22 21 20 - - 17 - 15 - 13 - 11 - 9 8 7 6 5 4 - 2 1	SALEABLE		345650003
MX123 CONN ASSY 73 CKT BLU OPT0 KEY C/44	345662593	C-HSG-C0	G-CAP-0-P	TPA-C0	RS	LS	MAL	CPA	MSEAL	RSEAL	- 71 - 69 68 67 - 65 64 - - 61 60 - 58 - 56 55 54 - - - 50 49 48 47 - 45 - 43 - 41 - - 38 37 36 35 - - - 31 - 29 28 - - - 24 23 - - 20 19 18 17 16 - - 13 12 11 - - 8 7 - 5 4 3 2 1	SALEABLE		345650003

molex

MX123 SEALED RCPT ASSY (73 Ckt)
BOM & PIN OUT SHEET

ASSEMBLY DESCRIPTION	ASSEMBLY PART NUMBER	CONNECTOR HOUSING	GROMMET CAP	TPA	RIGHT SLIDE	LEFT SLIDE	MATE ASSIST LEVER	CPA	MAT SEAL	RING SEAL	BLOCKED TERMINALS CAVITY WITH A NUMBER INDICATES BLOCKED TERMINAL POSITION CAVITY WITHOUT A NUMBER INDICATES OPEN TERMINAL POSITION	STATUS	COMMENTS	INTEGRAL COMPONENTS SOLD SEPARATELY DRESS COVER
MX123 CONN ASSY 73 CKT GRY OPT0 KEY B/53	345662603	C-HSG-B0	G-CAP-0-P	TPA-B0	RS	LS	MAL	CPA	MSEAL	RSEAL	72 71 70 69 68 - - - 64 63 62 61 60 - 58 - 56 - 54 - 52 51 50 - - - 46 45 - 43 42 41 40 - 38 - 36 - 34 - - - 32 31 30 - - 27 26 25 24 - 22 - 20 19 18 17 16 15 14 13 12 11 10 9 8 - 6 5 4 3 2 1	SALEABLE		345650003
MX123 CONN ASSY 73 CKT BLU OPT9 KEY C/41	345662613	C-HSG-C9	G-CAP-9-P	TPA-C9	RS	LS	MAL	CPA	MSEAL	RSEAL	- 71 - 69 68 - - 65 64 - - 61 60 - 58 - 56 55 54 - - - 50 49 48 47 - 45 - 43 - 41 - - 38 37 36 35 - - - - 32 31 - 29 28 - - - 24 23 - - - 19 18 17 16 - - 13 12 11 - - 8 7 - - - 3 2 1	SALEABLE		345650003
MX123 CONN ASSY 73 CKT BLK OPT0 KEY A/34	345662623	C-HSG-A0	G-CAP-0-P	TPA-A0	RS	LS	MAL	CPA	MSEAL	RSEAL	72 - 70 - - - 66 - - - 62 - 60 - 58 - - 55 54 53 52 51 - - 48 - 46 45 44 43 42 - 40 39 - - - 35 - - - - - - - - - 26 25 - - 22 21 - - - 17 - 15 14 - - - - - 8 - 6 5 - 3 2 1	SALEABLE		345650003
MX123 CONN ASSY 73 CKT BLK OPT0 KEY A/38	345662633	C-HSG-A0	G-CAP-0-P	TPA-A0	RS	LS	MAL	CPA	MSEAL	RSEAL	72 - 70 - - - 66 - - 63 62 - 60 - 58 - - 55 54 53 52 51 - - 48 - 46 45 44 43 42 - 40 39 - - - 35 34 - - - - - - - - 26 25 - - 22 21 - - - 17 - 15 14 13 12 - - - 8 - 6 5 - 3 2 1	SALEABLE		345650003
MX123 CONN ASSY 73 CKT BLK OPT0 KEY A/32	345662643	C-HSG-A0	G-CAP-0-P	TPA-A0	RS	LS	MAL	CPA	MSEAL	RSEAL	72 - 70 - - - 66 - - - 62 - 60 - 58 - - 55 54 53 52 51 - - 48 - 46 45 44 43 42 - 40 - - - - 35 - - - - - - - - - 26 25 - - - 21 - - - 17 - 15 14 - - - - - 8 - 6 5 - 3 2 1	SALEABLE		345650003
MX123 CONN ASSY 73 CKT BLK OPT0 KEY A/36	345662653	C-HSG-A0	G-CAP-0-P	TPA-A0	RS	LS	MAL	CPA	MSEAL	RSEAL	72 - 70 - - - 66 - - 63 62 - 60 - 58 - - 55 54 53 52 51 - - 48 - 46 45 44 43 42 - 40 - - - - 35 34 - - - - - - - - 26 25 - - - 21 - - - 17 - 15 14 13 12 - - - 8 - 6 5 - 3 2 1	SALEABLE		345650003
MX123 CONN ASSY 73 CKT GRY OPT0 KEY B/27	345662693	C-HSG-B0	G-CAP-0-P	TPA-B0	RS	LS	MAL	CPA	MSEAL	RSEAL	72 - - 69 - 67 - - 64 63 62 61 - - - - 56 55 - - 52 - - - - 47 - - 44 - - - - - - - - - 34 - - - - - 29 28 27 26 25 - - - 21 - 19 18 17 - - 14 - - - - - - - - - - 3 2 1	SALEABLE		345650003
MX123 CONN ASSY 73 CKT GRY OPT0 KEY B/55	345662703	C-HSG-B0	G-CAP-0-P	TPA-B0	RS	LS	MAL	CPA	MSEAL	RSEAL	72 71 70 69 68 67 66 - 64 63 62 61 60 - 58 - 56 - 54 - 52 51 50 - - - 46 45 - 43 42 41 40 - 38 - 36 - 34 - - - 32 31 30 - - 27 26 25 24 - 22 - 20 19 18 17 16 15 14 13 12 11 10 9 8 - 6 5 4 3 2 1	SALEABLE		345650003
MX123 CONN ASSY 73 CKT BLK OPT0 KEY A/33	345662713	C-HSG-A0	G-CAP-0-P	TPA-A0	RS	LS	MAL	CPA	MSEAL	RSEAL	72 71 70 - - 67 66 - - - 62 - - - - 57 - 55 54 53 - 51 - - 48 - 46 45 44 43 42 - 40 39 - - - 35 - - - - - - - - - 26 - - - 22 21 - - - - - 15 14 - - - - - 8 7 6 5 4 3 2 -	SALEABLE		345650003
MX123 CONN ASSY 73 CKT GRY OPT0 KEY B/20	345662723	C-HSG-B0	G-CAP-0-P	TPA-B0	RS	LS	MAL	CPA	MSEAL	RSEAL	72 - - 69 - 67 - - - - 62 61 - - - - - - - - 52 - - - - 47 - - 44 - - - - - - - - - 34 - - - - - 29 28 27 26 25 - - - 21 - - 18 17 - - 14 - - - - - - - - - - - - - 1	SALEABLE		345650003
MX123 CONN ASSY 73 CKT BLK OPT0 KEY A/35	345662733	C-HSG-A0	G-CAP-0-P	TPA-A0	RS	LS	MAL	CPA	MSEAL	RSEAL	72 71 - 69 - - - - 64 63 62 61 60 59 - - 56 - 54 53 52 51 50 - 48 - 46 45 - - - - 40 - 38 - 36 35 34 33 - - 31 - 29 28 - 26 - - - 22 - - - - - - - 14 - 12 11 - - - 7 - - 4 - - -	SALEABLE		345650003
MX123 CONN ASSY 73 CKT BLU OPT0 KEY C/41	345662743	C-HSG-C0	G-CAP-0-P	TPA-C0	RS	LS	MAL	CPA	MSEAL	RSEAL	- 71 - 69 68 - - 65 64 - - 61 60 - 58 - 56 55 54 - - - 50 49 48 47 - 45 - 43 - 41 - - 38 37 36 35 - - - - 31 - 29 28 27 - - 24 23 - - - 19 18 17 16 - - 13 12 11 - - 8 7 - - - 3 2 1	SALEABLE		345650003

molex

MX123 SEALED RCPT ASSY (73 Ckt)
BOM & PIN OUT SHEET

ASSEMBLY DESCRIPTION	ASSEMBLY PART NUMBER	CONNECTOR HOUSING	GROMMET CAP	TPA	RIGHT SLIDE	LEFT SLIDE	MATE ASSIST LEVER	CPA	MAT SEAL	RING SEAL	BLOCKED TERMINALS CAVITY WITH A NUMBER INDICATES BLOCKED TERMINAL POSITION CAVITY WITHOUT A NUMBER INDICATES OPEN TERMINAL POSITION	STATUS	COMMENTS	INTEGRAL COMPONENTS SOLD SEPARATELY DRESS COVER
MX123 CONN ASSY 73 CKT BLK OPT0 KEY A/38	345662753	C-HSG-A0	G-CAP-0-P	TPA-A0	RS	LS	MAL	CPA	MSEAL	RSEAL	72 71 70 69 68 67 66 65 64 - - - 60 59 - - - - - - - - 50 - 48 47 46 45 - - - - 40 39 38 - - - - - - - 31 30 - - - - 25 24 23 22 21 20 - - 17 - - - 14 - - - - 9 8 7 6 5 4 - 2 1	SALEABLE		345650003
MX123 CONN ASSY 73 CKT GRY OPT0 KEY B/25	345662763	C-HSG-B0	G-CAP-0-P	TPA-B0	RS	LS	MAL	CPA	MSEAL	RSEAL	- - - 69 - - - 65 64 63 - - - - - - - - - - - - 49 - - - 45 44 43 - - - - - - - - - - - - - - - - - - - 23 22 21 20 19 18 17 - - - - 12 11 - - - 7 6 5 4 3 2 1	SALEABLE		345650003
MX123 CONN ASSY 73 CKT BLK OPT9 KEY A/43	345662793	C-HSG-A9	G-CAP-9-P	TPA-A9	RS	LS	MAL	CPA	MSEAL	RSEAL	72 71 70 69 68 - - 65 64 63 62 61 60 59 58 57 56 55 54 53 52 51 50 49 - - 46 45 44 43 42 - 40 39 38 37 36 35 34 33 - - - - 28 - 26 - 24 23 - - 20 - - - - - - - 12 - - - - - - - - - 2 -	SALEABLE		345650003
MX123 CONN ASSY 73 CKT GRY OPT9 KEY B/22	345662813	C-HSG-B9	G-CAP-9-P	TPA-B9	RS	LS	MAL	CPA	MSEAL	RSEAL	- - - - - - - - 63 - - - - - - - - 53 - - - - - 47 - 45 - 43 42 41 - 39 38 - - 35 34 33 - - - - - - 26 - - 23 22 - - 19 - 17 - 15 - - - - - - 8 - - 5 - - - 1	SALEABLE		345650003
MX123 CONN ASSY 73 CKT BLK OPT0 KEY A/46	345662823	C-HSG-A0	G-CAP-0-P	TPA-A0	RS	LS	MAL	CPA	MSEAL	RSEAL	72 71 70 69 68 - - 65 64 63 62 61 60 59 58 57 56 55 54 53 52 51 50 49 48 - 46 45 44 43 42 - 40 39 38 37 36 35 34 33 - - - - 28 - 26 - 24 23 - - 20 - - - - - - - 12 11 - - - - - - - - 2 1	SALEABLE		345650003
MX123 CONN ASSY 73 CKT GRY OPT0 KEY B/26	345662833	C-HSG-B0	G-CAP-0-P	TPA-B0	RS	LS	MAL	CPA	MSEAL	RSEAL	- - - - - - - - 64 63 62 - - 59 58 - - - - 53 - - - - - 47 - 45 - 43 42 41 - 39 38 - - 35 34 33 - - - - - - 26 25 - 23 22 - - - - - - 15 - - - - - - 8 - - 5 - 3 - 1	SALEABLE		345650003
MX123 CONN ASSY 73 CKT BLK OPT0 KEY A/44	345662843	C-HSG-A0	G-CAP-0-P	TPA-A0	RS	LS	MAL	CPA	MSEAL	RSEAL	72 71 70 69 68 - - 65 64 63 62 61 60 59 58 57 56 55 54 53 52 51 50 49 48 - 46 45 44 43 42 - 40 39 38 37 36 35 34 33 - - - - 28 - 26 - 24 23 - - 20 - - - - - - - 12 11 - - - - - - - - 2 -	SALEABLE		345650003
MX123 CONN ASSY 73 CKT GRY OPT0 KEY B/24	345662853	C-HSG-B0	G-CAP-0-P	TPA-B0	RS	LS	MAL	CPA	MSEAL	RSEAL	- - - - - - - - - - 62 - - 59 58 - - - - 53 - - - - - 47 - 45 - 43 42 41 - 39 38 - - 35 34 33 - - - - - - 26 25 - 23 22 - - - - 17 - 15 - - - - - - 8 - - 5 - - - 1	SALEABLE		345650003
MX123 CONN ASSY 73 CKT BLK OPT0 KEY A/23	345662863	C-HSG-A0	G-CAP-0-P	TPA-A0	RS	LS	MAL	CPA	MSEAL	RSEAL	- - - - - - - 65 - - - 61 - - 58 57 56 - - - - 51 50 - - 47 - 45 - - - 41 - - 38 37 36 - - - - 31 30 - - - 26 25 - - 22 21 20 - - - - 15 - - - - 10 - - - - - - - - -	SALEABLE		345650003
MX123 CONN ASSY 73 CKT GRY OPT0 KEY B/37	345662873	C-HSG-B0	G-CAP-0-P	TPA-B0	RS	LS	MAL	CPA	MSEAL	RSEAL	- - - - - - - 65 64 63 62 61 60 - - - - - 54 - - - - - - - 46 45 44 43 42 41 40 - - - - - 34 - 32 31 30 29 28 27 26 25 24 - - - 20 19 18 17 16 - 14 13 12 - - 9 - 7 - - - - 2 1	SALEABLE		345650003
MX123 CONN ASSY 73 CKT BLK OPT0 KEY A/39	345662883	C-HSG-A0	G-CAP-0-P	TPA-A0	RS	LS	MAL	CPA	MSEAL	RSEAL	72 71 - - 68 67 66 65 64 - - - 60 59 - - - - - - - - 50 - 48 47 46 45 - - - - 40 39 38 - - 35 - 33 - 31 30 - - - - 25 24 23 22 21 20 - - 17 - 15 14 - - - - 9 8 7 6 5 4 - 2 1	SALEABLE		345650003
MX123 CONN ASSY 73 CKT BLK OPT0 KEY A/35	345662893	C-HSG-A0	G-CAP-0-P	TPA-A0	RS	LS	MAL	CPA	MSEAL	RSEAL	- 71 70 - 68 - 66 - 64 - 62 61 - 59 58 - - 55 54 - 52 51 50 - 48 - - 45 - - 42 41 - 39 38 - - - 34 - 32 - - - - 27 26 25 - 23 22 - - 19 18 - - - - - 12 - - 9 8 7 6 - - - - -	SALEABLE		345650003

molex

MX123 SEALED RCPT ASSY (73 Ckt)
BOM & PIN OUT SHEET

ASSEMBLY DESCRIPTION	ASSEMBLY PART NUMBER	CONNECTOR HOUSING	GROMMET CAP	TPA	RIGHT SLIDE	LEFT SLIDE	MATE ASSIST LEVER	CPA	MAT SEAL	RING SEAL	BLOCKED TERMINALS CAVITY WITH A NUMBER INDICATES BLOCKED TERMINAL POSITION CAVITY WITHOUT A NUMBER INDICATES OPEN TERMINAL POSITION	STATUS	COMMENTS	INTEGRAL COMPONENTS SOLD SEPARATELY DRESS COVER
MX123 CONN ASSY 73 CKT BLK OPT0 KEY A/24	345662903	C-HSG-A0	G-CAP-0-P	TPA-A0	RS	LS	MAL	CPA	MSEAL	RSEAL	- - - - - - - 65 - - - - 60 - 58 57 56 - - - - - 50 - - 47 46 45 - - - - 40 - 38 37 36 - - - - - - 30 - 28 - 26 - 24 - 22 21 20 - - - - 15 14 - - - 10 - - - - - - - - -	SALEABLE		345650003
MX123 CONN ASSY 73 CKT GRY OPT0 KEY B/55	345662913	C-HSG-B0	G-CAP-0-P	TPA-B0	RS	LS	MAL	CPA	MSEAL	RSEAL	72 71 70 69 - - 66 65 - 63 62 61 60 59 - 57 56 55 54 53 52 51 50 49 48 47 - - 44 43 42 41 40 39 - 37 36 35 34 33 - 31 - - - 26 25 24 23 - 21 20 19 18 - 16 - 14 - 12 11 - 9 8 7 6 5 4 3 2 -	SALEABLE		345650003
MX123 CONN ASSY 73 CKT GRY OPT0 KEY B/59	345662923	C-HSG-B0	G-CAP-0-P	TPA-B0	RS	LS	MAL	CPA	MSEAL	RSEAL	72 71 70 69 - - 66 65 - 63 62 61 60 59 58 57 56 55 54 53 52 51 50 49 48 47 - - 44 43 42 41 40 39 38 37 36 35 34 33 - 31 - - - - 26 25 24 23 22 21 20 19 18 - 16 - 14 - 12 11 - 9 8 7 6 5 4 3 2 1	SALEABLE		345650003
MX123 CONN ASSY 73 CKT BLK OPT0 KEY A/37	345662933	C-HSG-A0	G-CAP-0-P	TPA-A0	RS	LS	MAL	CPA	MSEAL	RSEAL	- 71 70 - 68 - 66 - 64 - 62 61 - 59 58 - - 55 54 - 52 51 50 - 48 - 46 45 - - 42 41 - 39 38 - - - 34 - 32 - - - - 27 26 25 - 23 22 - - 19 18 - - - - 13 12 - - 9 8 7 6 - - - - -	SALEABLE		345650003
MX123 CONN ASSY 73 CKT GRY OPT0 KEY B/23	345662943	C-HSG-B0	G-CAP-0-P	TPA-B0	RS	LS	MAL	CPA	MSEAL	RSEAL	72 71 70 69 - - 66 65 - - 62 61 60 - 58 - 56 55 54 53 52 51 50 49 48 47 - - 44 - 42 41 40 - 38 - 36 35 34 33 - 31 - - - - 26 25 24 23 22 - 20 19 18 17 16 15 14 13 12 11 - 9 8 7 - - - - 2 1	SALEABLE		345650003
MX123 CONN ASSY 73 CKT GRY OPT0 KEY B/21	345662953	C-HSG-B0	G-CAP-0-P	TPA-B0	RS	LS	MAL	CPA	MSEAL	RSEAL	72 71 70 69 - - 66 65 - - 62 61 60 - 58 57 56 55 54 53 52 51 50 49 48 47 - - 44 - 42 41 40 - 38 37 36 35 - 33 - 31 - - - - 26 25 24 23 22 21 20 19 18 17 16 15 14 13 12 11 - 9 8 7 - - - - 2 1	SALEABLE		345650003
MX123 CONN ASSY 73 CKT BLK OPT9 KEY A/38	345662983	C-HSG-A9	G-CAP-9-P	TPA-A9	RS	LS	MAL	CPA	MSEAL	RSEAL	72 71 - - 68 67 66 65 64 - - - 60 59 - - - - - - - - 50 - 48 47 46 45 - - - - 40 39 38 - - 35 - 33 - 31 30 - - - - 25 24 23 22 21 20 - - - - - 14 - - - - 9 8 7 6 5 4 - - -	SALEABLE		345650003
MX123 CONN ASSY 73 CKT GRY OPT9 KEY B/49	345662993	C-HSG-B9	G-CAP-9-P	TPA-B9	RS	LS	MAL	CPA	MSEAL	RSEAL	- - - 69 - - - 65 64 63 - - - - - - - - - - - - - 49 - - - 45 44 43 - - - - - - - - - - - - - - - - - - - 23 22 21 20 19 18 17 - - - - 12 11 - - - 7 6 5 4 3 2 1	SALEABLE		345650003
MX123 CONN ASSY 73 CKT BLK OPT0 KEY A/6	345663003	C-HSG-A0	G-CAP-0-P	TPA-A0	RS	LS	MAL	CPA	MSEAL	RSEAL	- - - - - - - 65 - - - 61 - - - - - - - - - - - - - - - 45 - - - - - - - - - - - - - - - - - - 26 - - - - - - - - - - - - - - - - 10 - - - - - - - - -	SALEABLE		345650003
MX123 CONN ASSY 73 CKT BLU OPT9 KEY C/41	345663013	C-HSG-C9	G-CAP-9-P	TPA-C9	RS	LS	MAL	CPA	MSEAL	RSEAL	- - - - - - - 65 64 - - 61 60 - 58 - - - 54 - - - 50 49 48 47 - 45 - 43 - 41 - - - 37 36 35 - - - 31 - 29 28 27 - - 24 23 - - 20 - - 17 16 - - 13 12 11 - - 8 7 - - - - 2 1	SALEABLE		345650003
MX123 CONN ASSY 73 CKT BLU OPT0 KEY C/37	345663043	C-HSG-C0	G-CAP-0-P	TPA-C0	RS	LS	MAL	CPA	MSEAL	RSEAL	- 71 - 69 - 67 - 65 64 - - 61 60 - 58 - 56 55 54 - - - 50 49 - - - 45 - 43 - 41 - - 38 37 36 35 - - - 31 - 29 28 - - - 24 23 - - - 19 18 17 16 - - - 12 11 - - 8 7 - - - 3 2 1	SALEABLE		345650003
MX123 CONN ASSY 73 CKT BLU OPT0 KEY C/38	345663053	C-HSG-C0	G-CAP-0-P	TPA-C0	RS	LS	MAL	CPA	MSEAL	RSEAL	- 71 - 69 - 67 - 65 64 - - 61 60 - 58 - 56 55 54 - - - 50 49 - - - 45 - 43 - 41 - - - 37 36 35 - - - 31 - 29 28 - - - 24 23 - - - 19 18 17 16 - - - 12 11 - - 8 7 - - - 3 2 1	SALEABLE		345650003

molex

MX123 SEALED RCPT ASSY (73 Ckt)
BOM & PIN OUT SHEET

ASSEMBLY DESCRIPTION	ASSEMBLY PART NUMBER	CONNECTOR HOUSING	GROMMET CAP	TPA	RIGHT SLIDE	LEFT SLIDE	MATE ASSIST LEVER	CPA	MAT SEAL	RING SEAL	BLOCKED TERMINALS CAVITY WITH A NUMBER INDICATES BLOCKED TERMINAL POSITION CAVITY WITHOUT A NUMBER INDICATES OPEN TERMINAL POSITION	STATUS	COMMENTS	INTEGRAL COMPONENTS SOLD SEPARATELY DRESS COVER
MX123 CONN ASSY 73 CKT BLK OPT0 KEY A/36	345663063	C-HSG-A0	G-CAP-0-P	TPA-A0	RS	LS	MAL	CPA	MSEAL	RSEAL	72 - 70 - 68 67 66 - - - 62 61 - 59 - - - - - - - - 50 - 48 47 46 - - - - - 40 39 38 - - - - - - - 31 - 29 - 27 - 25 24 23 22 21 20 - - 17 - - 15 14 13 - 11 - 9 8 7 6 5 4 - 2 1	SALEABLE		345650003
MX123 CONN ASSY 73 CKT BLK OPT0 KEY A/39	345663073	C-HSG-A0	G-CAP-0-P	TPA-A0	RS	LS	MAL	CPA	MSEAL	RSEAL	72 - 70 - 68 67 66 - - - 62 61 - 59 58 - - - - - - - 50 - 48 47 46 - - - - - 40 39 38 - - - - - - - 31 - 29 - 27 - 25 24 - 22 21 20 - - 17 - - 15 14 13 - 11 - 9 - - - 5 4 - 2 1	SALEABLE		345650003
MX123 CONN ASSY 73 CKT BLK OPT0 KEY A/36	345663083	C-HSG-A0	G-CAP-0-P	TPA-A0	RS	LS	MAL	CPA	MSEAL	RSEAL	72 - 70 - 68 67 66 - - - 62 61 - 59 - - - - - - - - 50 - 48 47 46 - - - - - 40 39 38 - - - - - - - 31 - 29 - 27 - 25 24 23 22 21 20 - - 17 - - 15 14 13 12 - - 9 8 7 6 5 4 - 2 1	SALEABLE		345650003
MX123 CONN ASSY 73 CKT BLK OPT0 KEY A/36	345663093	C-HSG-A0	G-CAP-0-P	TPA-A0	RS	LS	MAL	CPA	MSEAL	RSEAL	72 - 70 - 68 67 66 65 - - - 61 - 59 58 - - - - - - - 50 - 48 47 46 - - - - - 40 39 38 - - - - - - - 31 - 29 - 27 - 25 24 - 22 21 20 - - 17 - - 15 14 13 - 11 - 9 8 7 6 5 4 - 2 1	SALEABLE		345650003
MX123 CONN ASSY 73 CKT GRY OPT0 KEY B/48	345663103	C-HSG-B0	G-CAP-0-P	TPA-B0	RS	LS	MAL	CPA	MSEAL	RSEAL	72 71 70 69 68 67 66 - 64 63 - 61 60 - 58 - 56 - 54 - 52 51 50 - - 47 - 45 44 43 - 41 40 - 38 - 36 - 34 - - 32 31 30 - 28 27 - 25 24 - 22 - 20 19 - 17 16 - 14 13 12 11 10 - - - 6 5 - - 2 1	SALEABLE		345650003
MX123 CONN ASSY 73 CKT BLK OPT0 KEY A/39	345663113	C-HSG-A0	G-CAP-0-P	TPA-A0	RS	LS	MAL	CPA	MSEAL	RSEAL	72 - 70 - 68 67 66 - - - 62 61 - 59 58 - - - - - - - 50 - 48 47 46 - - - - - 40 39 38 - - - - - - - 31 - 29 - 27 - 25 24 - 22 - 20 - - 17 - - 15 14 13 - 11 - 9 - 7 6 - 4 - 2 1	SALEABLE		345650003
MX123 CONN ASSY 73 CKT GRY OPT0 KEY B/32	345663123	C-HSG-B0	G-CAP-0-P	TPA-B0	RS	LS	MAL	CPA	MSEAL	RSEAL	- 71 - 69 - 67 - 65 64 63 62 61 - - 58 57 56 - - - - 51 - 49 - 47 - 45 44 43 42 41 - - 38 37 36 - - - - - - - - - - - - 23 22 21 20 19 18 17 - 15 14 13 12 11 - - - 7 6 5 4 3 2 1	SALEABLE		345650003
MX123 CONN ASSY 73 CKT BLU OPT0 KEY C/36	345663133	C-HSG-C0	G-CAP-0-P	TPA-C0	RS	LS	MAL	CPA	MSEAL	RSEAL	- 71 - 69 - - - 65 64 - - 61 60 - 58 - 56 55 54 - - - 50 49 - - - 45 - 43 - 41 - - 38 37 36 35 - - - 31 - 29 28 27 - - 24 23 - - - 19 18 17 16 - - 13 12 11 - - 8 7 - - - 3 2 1	SALEABLE		345650003
MX123 CONN ASSY 73 CKT BLU OPT0 KEY C/31	345663143	C-HSG-C0	G-CAP-0-P	TPA-C0	RS	LS	MAL	CPA	MSEAL	RSEAL	- 71 - 69 68 67 - 65 64 - - 61 60 - 58 - 56 55 54 - - - 50 49 48 47 - 45 - 43 - 41 - - 38 - - 35 - - - 31 - 29 28 27 - - 24 23 - - 20 19 18 17 16 - - 13 12 11 - - 8 7 - 5 4 3 2 1	SALEABLE		345650003
MX123 CONN ASSY 73 CKT BLK OPT0 KEY A/26	345663153	C-HSG-A0	G-CAP-0-P	TPA-A0	RS	LS	MAL	CPA	MSEAL	RSEAL	72 71 - - 68 67 66 65 64 - 62 61 60 59 - 57 - 55 - 53 - - 50 - 48 - 46 45 - - - - 40 39 38 37 - 35 - 33 - 31 30 29 - 27 - 25 24 23 22 21 20 - - 17 - 15 14 13 - 11 - 9 8 7 6 5 4 - 2 1	SALEABLE		345650003
MX123 CONN ASSY 73 CKT BLU OPT0 KEY C/35	345663163	C-HSG-C0	G-CAP-0-P	TPA-C0	RS	LS	MAL	CPA	MSEAL	RSEAL	- 71 - 69 68 67 66 65 64 - - 61 60 - 58 - - - 54 - - - 50 49 48 47 - 45 - 43 - 41 - - 38 - - 35 - - - 31 - 29 28 27 - - 24 23 - - 20 - - 17 16 - - 13 12 11 - - 8 7 - 5 4 - 2 1	SALEABLE		345650003
MX123 CONN ASSY 73 CKT BLK OPT0 KEY A/29	345663173	C-HSG-A0	G-CAP-0-P	TPA-A0	RS	LS	MAL	CPA	MSEAL	RSEAL	72 71 - - 68 67 66 65 64 - 62 61 60 59 - 57 - 55 - 53 - - 50 - 48 - 46 45 - - - - 40 39 38 37 - 35 - 33 - 31 30 29 - 27 - 25 24 23 22 21 20 - - - - 15 14 13 - 11 - 9 8 7 6 5 4 - - -	SALEABLE		345650003

molex

MX123 SEALED RCPT ASSY (73 Ckt)
BOM & PIN OUT SHEET

ASSEMBLY DESCRIPTION	ASSEMBLY PART NUMBER	CONNECTOR HOUSING	GROMMET CAP	TPA	RIGHT SLIDE	LEFT SLIDE	MATE ASSIST LEVER	CPA	MAT SEAL	RING SEAL	BLOCKED TERMINALS CAVITY WITH A NUMBER INDICATES BLOCKED TERMINAL POSITION CAVITY WITHOUT A NUMBER INDICATES OPEN TERMINAL POSITION	STATUS	COMMENTS	INTEGRAL COMPONENTS SOLD SEPARATELY DRESS COVER
MX123 CONN ASSY 73 CKT BLU OPT0 KEY C/30	345663183	C-HSG-C0	G-CAP-0-P	TPA-C0	RS	LS	MAL	CPA	MSEAL	RSEAL	- 71 - 69 68 67 - 65 64 - - 61 60 - 58 - - - 54 - - - 50 49 48 47 - 45 - 43 - 41 - - 38 37 36 35 - - - 32 31 - 29 28 27 - - 24 23 - - 20 19 18 17 - 16 - - 13 12 11 - - 8 7 - 5 4 3 2 1	SALEABLE		345650003
MX123 CONN ASSY 73 CKT BLK OPT0 KEY A/31	345663193	C-HSG-A0	G-CAP-0-P	TPA-A0	RS	LS	MAL	CPA	MSEAL	RSEAL	72 71 70 - 68 67 66 65 64 - 62 61 60 59 - 57 - - - - - - 50 - 48 47 46 45 - - - - 40 39 38 37 - - - - - - 31 30 29 - 27 - 25 24 23 22 21 20 - - - - - 15 14 13 - 11 - 9 8 7 6 5 4 - - -	SALEABLE		345650003
MX123 CONN ASSY 73 CKT GRY OPT0 KEY B/42	345663203	C-HSG-B0	G-CAP-0-P	TPA-B0	RS	LS	MAL	CPA	MSEAL	RSEAL	72 71 70 69 68 - 66 65 64 63 62 61 - - - - - - 54 - 52 51 - - - 47 - 45 44 43 42 41 40 - - - 36 - - - - 32 31 30 - 28 27 26 25 24 - - - 20 19 - 17 - - - - 13 12 11 10 9 8 - - - - - - 2 1	SALEABLE		345650003
MX123 CONN ASSY 73 CKT BLU OPT0 KEY C/31	345663213	C-HSG-C0	G-CAP-0-P	TPA-C0	RS	LS	MAL	CPA	MSEAL	RSEAL	- 71 - 69 68 - - 65 64 - - 61 60 - 58 57 - 55 54 - - - 50 49 48 47 - 45 - 43 - 41 - 39 38 37 36 35 - - - - 31 - 29 28 27 - - 24 23 - - 20 19 18 17 - 16 - - 13 12 11 - - 8 7 - - - 3 2 1	SALEABLE		345650003
MX123 CONN ASSY 73 CKT BLU OPT0 KEY C/33	345663223	C-HSG-C0	G-CAP-0-P	TPA-C0	RS	LS	MAL	CPA	MSEAL	RSEAL	- 71 - 69 68 - - 65 64 - - 61 60 - 58 - 56 55 54 - - - 50 49 48 47 - 45 - 43 - 41 - - 38 37 36 35 - - - - 31 - 29 28 - - - 24 23 - - 20 19 18 17 - 16 - - 13 12 11 - - 8 7 - - - 3 2 1	SALEABLE		345650003
MX123 CONN ASSY 73 CKT BLK OPT0 KEY A/36	345663233	C-HSG-A0	G-CAP-0-P	TPA-A0	RS	LS	MAL	CPA	MSEAL	RSEAL	72 71 - - 68 67 66 65 64 - - - 60 59 - - - - - - - - 50 - 48 47 46 45 - - - - 40 39 38 - - 35 - 33 - - 31 30 - - - 25 24 23 22 21 20 - - 17 - - - 14 - - - 9 8 7 6 5 4 - 2 1	SALEABLE		345650003
MX123 CONN ASSY 73 CKT BLU OPT0 KEY C/31	345663243	C-HSG-C0	G-CAP-0-P	TPA-C0	RS	LS	MAL	CPA	MSEAL	RSEAL	- 71 - 69 68 67 - 65 64 - - 61 60 - 58 - 56 55 54 - - - 50 49 48 47 - 45 - 43 - 41 - - 38 37 36 35 - - - - 31 - 29 28 27 - - 24 23 - - 20 19 18 17 - 16 - - 13 12 11 - - 8 7 - - - 3 2 1	SALEABLE		345650003
MX123 CONN ASSY 73 CKT BLK OPT0 KEY A/28	345663253	C-HSG-A0	G-CAP-0-P	TPA-A0	RS	LS	MAL	CPA	MSEAL	RSEAL	72 71 - - 68 67 66 65 64 - 62 61 60 59 - 57 - - - - - - 50 - 48 47 46 45 - - - - 40 39 38 37 - 35 - 33 - - 31 30 29 - 27 - 25 24 23 22 21 20 - - 17 - - 14 13 - 11 - 9 8 7 6 5 4 - 2 1	SALEABLE		345650003
MX123 CONN ASSY 73 CKT BLU OPT0 KEY C/36	345663263	C-HSG-C0	G-CAP-0-P	TPA-C0	RS	LS	MAL	CPA	MSEAL	RSEAL	- 71 - 69 68 67 - 65 64 - - 61 60 - 58 - - - 54 - - - 50 49 48 47 - 45 - 43 - 41 - - 38 37 36 35 - - - - 31 - 29 28 27 - - 24 23 - - 20 - - 17 - 16 - - 13 12 11 - - 8 7 - - - - 2 1	SALEABLE		345650003
MX123 CONN ASSY 73 CKT BLK OPT0 KEY A/31	345663273	C-HSG-A0	G-CAP-0-P	TPA-A0	RS	LS	MAL	CPA	MSEAL	RSEAL	72 71 - - 68 67 66 65 64 - 62 61 60 59 - 57 - - - - - - 50 - 48 47 46 45 - - - - 40 39 38 37 - 35 - 33 - - 31 30 29 - 27 - 25 24 23 22 21 20 - - - - - 14 13 - 11 - 9 8 7 6 5 4 - - -	SALEABLE		345650003
MX123 CONN ASSY 73 CKT BLU OPT0 KEY C/31	345663283	C-HSG-C0	G-CAP-0-P	TPA-C0	RS	LS	MAL	CPA	MSEAL	RSEAL	- 71 - 69 68 - - 65 64 - - 61 60 - 58 - 56 55 54 - - - 50 49 48 47 - 45 - 43 - 41 - - 38 37 36 35 - - - 32 31 - 29 28 27 - - 24 23 - - 20 19 18 17 - 16 - - 13 12 11 - - 8 7 - - - 3 2 1	SALEABLE		345650003
MX123 CONN ASSY 73 CKT GRY OPT0 KEY B/49	345663293	C-HSG-B0	G-CAP-0-P	TPA-B0	RS	LS	MAL	CPA	MSEAL	RSEAL	- - - 69 - - - 65 64 63 - - - - - - - - - - - - - 49 - - 46 45 44 43 - 22 21 20 19 18 17 - - - - 12 11 - - - 7 6 5 4 3 2 1	SALEABLE		345650003

molex

MX123 SEALED RCPT ASSY (73 Ckt)
BOM & PIN OUT SHEET

ASSEMBLY DESCRIPTION	ASSEMBLY PART NUMBER	CONNECTOR HOUSING	GROMMET CAP	TPA	RIGHT SLIDE	LEFT SLIDE	MATE ASSIST LEVER	CPA	MAT SEAL	RING SEAL	BLOCKED TERMINALS CAVITY WITH A NUMBER INDICATES BLOCKED TERMINAL POSITION CAVITY WITHOUT A NUMBER INDICATES OPEN TERMINAL POSITION	STATUS	COMMENTS	INTEGRAL COMPONENTS SOLD SEPARATELY DRESS COVER
MX123 CONN ASSY 73 CKT GRY OPT0 KEY B/44	345663303	C-HSG-B0	G-CAP-0-P	TPA-B0	RS	LS	MAL	CPA	MSEAL	RSEAL	72 71 70 69 68 67 66 65 64 63 62 61 60 - - - - - 54 - 52 51 - - - 47 - 45 44 43 42 41 40 - - - 36 - - - - 32 31 30 - 28 27 26 25 24 - - - 20 19 - 17 - - - 13 12 11 10 9 8 - - - - - 2 1	SALEABLE		345650003
MX123 CONN ASSY 73 CKT BLU OPT0 KEY C/28	345663313	C-HSG-C0	G-CAP-0-P	TPA-C0	RS	LS	MAL	CPA	MSEAL	RSEAL	- 71 - 69 68 67 66 65 64 - - 61 60 - 58 - 56 55 54 - - - 50 49 48 47 - 45 - 43 - 41 - - 38 37 36 35 - - - 31 - 29 28 27 - - 24 23 - - 20 19 18 17 16 - - 13 12 11 10 9 8 7 - - - 3 2 1	SALEABLE		345650003
MX123 CONN ASSY 73 CKT GRY OPT0 KEY B/25	345663323	C-HSG-B0	G-CAP-0-P	TPA-B0	RS	LS	MAL	CPA	MSEAL	RSEAL	72 71 70 69 - - - - - - 62 61 60 59 - 57 56 - 54 53 52 51 50 - - 47 - - - - 42 41 40 39 - 37 36 35 34 33 - 31 - - - - 26 25 24 23 - 21 20 19 18 - - 15 14 13 12 11 - 9 8 7 6 5 4 3 2 1	SALEABLE		345650003
MX123 CONN ASSY 73 CKT BLK OPT0 KEY A/49	345663333	C-HSG-A0	G-CAP-0-P	TPA-A0	RS	LS	MAL	CPA	MSEAL	RSEAL	- - - - - 67 66 - - - 62 - 60 - - - - 55 - 53 - - - - 48 - 46 45 44 43 - - 40 39 - - - 35 - - - - - - - - - 25 - - 22 21 - - - - - 15 14 - - - - - 8 7 6 5 4 - - -	SALEABLE		345650003
MX123 CONN ASSY 73 CKT BLK OPT0 KEY A/41	345663343	C-HSG-A0	G-CAP-0-P	TPA-A0	RS	LS	MAL	CPA	MSEAL	RSEAL	- 71 70 - 68 - - - 64 - 62 61 - 59 58 - - 55 54 - 52 51 50 - 48 - 46 45 - - - 41 - 39 38 - - - 34 - - 32 - - - 27 - 25 - 23 22 - - 19 18 - - - - - 12 - - 9 8 7 6 - - - - -	SALEABLE		345650003
MX123 CONN ASSY 73 CKT GRY OPT0 KEY B/23	345663353	C-HSG-B0	G-CAP-0-P	TPA-B0	RS	LS	MAL	CPA	MSEAL	RSEAL	72 71 70 69 - - 66 65 - 63 62 61 60 - - 57 56 55 - 53 52 51 50 49 48 47 - - 44 43 42 41 40 - - 37 36 35 34 33 - 31 - - - - 26 25 24 - - 21 20 19 18 - 16 15 14 13 - 11 - 9 - 7 6 5 4 3 2 -	SALEABLE		345650003
MX123 CONN ASSY 73 CKT BLK OPT0 KEY A/45	345663363	C-HSG-A0	G-CAP-0-P	TPA-A0	RS	LS	MAL	CPA	MSEAL	RSEAL	72 - 70 - - 67 66 - - - 62 - 60 - 58 - - 55 - 53 - 51 - - 48 - 46 45 44 43 - - - - - - - 35 - - - - - - - - - 25 - - - 21 - - - 17 - 15 14 - - - - - 8 7 6 5 4 3 2 -	SALEABLE		345650003
MX123 CONN ASSY 73 CKT BLU OPT9 KEY C/41	345663373	C-HSG-C9	G-CAP-9-P	TPA-C9	RS	LS	MAL	CPA	MSEAL	RSEAL	- 71 - 69 - - - 65 64 - - 61 60 - 58 - - - 54 - - - 50 49 - - - 45 - 43 - 41 - - - 37 36 35 - - - 31 - 29 28 27 - - 24 23 - - 20 - - 17 16 - - 13 12 11 - - 8 7 - - - - 2 1	SALEABLE		345650003
MX123 CONN ASSY 73 CKT BLK OPT0 KEY A/44	345663383	C-HSG-A0	G-CAP-0-P	TPA-A0	RS	LS	MAL	CPA	MSEAL	RSEAL	72 71 - - - 67 66 - - - 62 - 60 - - - - 55 - 53 - 51 - - - - 46 45 44 43 - - 40 39 - - - 35 - - - - - - - - - 25 - - 22 21 - - - 17 - 15 14 - - - - - 8 7 6 5 4 3 2 -	SALEABLE		345650003
MX123 CONN ASSY 73 CKT BLU OPT0 KEY C/35	345663393	C-HSG-C0	G-CAP-0-P	TPA-C0	RS	LS	MAL	CPA	MSEAL	RSEAL	- 71 - 69 - - - 65 64 - - 61 60 - 58 - 56 55 54 - - - 50 49 - - - 45 - 43 - 41 - - 38 37 36 35 - - - 31 - 29 28 27 - - 24 23 - - 20 19 18 17 16 - - 13 12 11 - - 8 7 - - - 3 2 1	SALEABLE		345650003
MX123 CONN ASSY 73 CKT BLK OPT0 KEY A/6	345663403	C-HSG-A0	G-CAP-0-P	TPA-A0	RS	LS	MAL	CPA	MSEAL	RSEAL	- - - - - - - 65 - - - 61 - - - - - - - - - - - - - - - 45 - - - - - - - - - - - - - - - - - - 26 - - - - - - - - - - - - - - - - 10 - - - - - - - - - -	SALEABLE		345650003
MX123 CONN ASSY 73 CKT BLK OPT0 KEY A/45	345663413	C-HSG-A0	G-CAP-0-P	TPA-A0	RS	LS	MAL	CPA	MSEAL	RSEAL	- 71 - 69 68 - - - 64 63 62 - 60 59 - - 56 - - 53 52 51 - - 48 - 46 - - - - - 40 - 38 - 36 - 34 33 - 31 - 29 28 - - - - 23 22 - - - - - - - 14 - 12 - - - - 7 - - 4 - - -	SALEABLE		345650003

molex

MX123 SEALED RCPT ASSY (73 Ckt)
BOM & PIN OUT SHEET

ASSEMBLY DESCRIPTION	ASSEMBLY PART NUMBER	CONNECTOR HOUSING	GROMMET CAP	TPA	RIGHT SLIDE	LEFT SLIDE	MATE ASSIST LEVER	CPA	MAT SEAL	RING SEAL	BLOCKED TERMINALS CAVITY WITH A NUMBER INDICATES BLOCKED TERMINAL POSITION CAVITY WITHOUT A NUMBER INDICATES OPEN TERMINAL POSITION	STATUS	COMMENTS	INTEGRAL COMPONENTS SOLD SEPARATELY DRESS COVER
MX123 CONN ASSY 73 CKT BLU OPT9 KEY C/31	345663423	C-HSG-C9	G-CAP-9-P	TPA-C9	RS	LS	MAL	CPA	MSEAL	RSEAL	72 71 70 - 68 67 66 65 64 - 62 61 60 59 - 57 - - - - - - 50 - 48 47 46 45 - - - - 40 39 38 37 - - - - - - 31 30 29 - 27 - 25 24 23 22 21 20 - - - - - 15 14 13 - 11 - 9 8 7 6 5 4 - - -	SALEABLE		345650003
MX123 CONN ASSY 73 CKT BLU OPT9 KEY C/30	345663433	C-HSG-C9	G-CAP-9-P	TPA-C9	RS	LS	MAL	CPA	MSEAL	RSEAL	- 71 - 69 68 67 - 65 64 - - 61 60 - 58 - - - 54 - - - 50 49 48 47 - 45 - 43 - 41 - - 38 37 36 35 - - - 32 31 - 29 28 27 - - 24 23 - - 20 19 18 17 16 - - 13 12 11 - - 8 7 - 5 4 3 2 1	SALEABLE		345650003
MX123 CONN ASSY 73 CKT BLK OPT0 KEY A/36	345663443	C-HSG-A0	G-CAP-0-P	TPA-A0	RS	LS	MAL	CPA	MSEAL	RSEAL	72 - 70 - 68 67 66 - - - 62 61 - 59 58 - - - - - - - 50 - 48 47 46 - - - - - 40 39 38 - - - - - - - 31 - 29 - 27 - 25 24 - 22 21 20 - - 17 - 15 14 13 - 11 - 9 8 7 6 5 4 - 2 1	SALEABLE		345650003
MX123 CONN ASSY 73 CKT BLK OPT0 KEY A/6	345663453	C-HSG-A0	G-CAP-0-P	TPA-A0	RS	LS	MAL	CPA	MSEAL	RSEAL	72 71 70 69 68 67 66 65 64 63 62 - 60 59 58 57 56 55 54 53 52 51 50 49 48 47 46 45 44 43 42 41 40 39 38 37 36 35 34 33 32 31 30 29 28 27 26 25 24 23 22 21 - 19 18 17 16 15 14 13 12 11 10 - 8 7 6 - 4 3 2 -	SALEABLE		345650003
MX123 CONN ASSY 73 CKT GRY OPT9 KEY B/54	345663473	C-HSG-B9	G-CAP-9-P	TPA-B9	RS	LS	MAL	CPA	MSEAL	RSEAL	- - - - - - - - - 63 - - - - - - - - 53 - - - - 48 47 - 45 - 43 42 41 - 39 - - - 35 34 33 - - - - - - - - - 26 - - 23 22 - - 19 - - - - - - - - - - - 11 - - 8 - - - - - - 1	SALEABLE		345650003
MX123 CONN ASSY 73 CKT GRY OPT0 KEY B/51	345663483	C-HSG-B0	G-CAP-0-P	TPA-B0	RS	LS	MAL	CPA	MSEAL	RSEAL	- - - - - - - - 64 63 62 - - 59 58 - - - - 53 - - - - - 47 - 45 - 43 42 41 - 39 - - - 35 34 33 - - - - - - - - - 26 25 - 23 22 - - - - - - - - - - - - - - - - 8 - - - - 3 - 1	SALEABLE		345650003
MX123 CONN ASSY 73 CKT BLK OPT0 KEY A/44	345663493	C-HSG-A0	G-CAP-0-P	TPA-A0	RS	LS	MAL	CPA	MSEAL	RSEAL	- 71 - 69 68 - - - 64 63 62 - 60 59 - - 56 - - 53 52 51 50 - 48 - 46 - - - - - 40 - 38 - 36 - 34 33 - 31 - 29 28 - - - - 23 22 - - - - - - - 14 - 12 - - - - 7 - - - - - 1	SALEABLE		345650003
MX123 CONN ASSY 73 CKT BLK OPT0 KEY A/32	345663503	C-HSG-A0	G-CAP-0-P	TPA-A0	RS	LS	MAL	CPA	MSEAL	RSEAL	- - 70 - - - - 65 - - - 61 - - 58 57 56 55 54 53 - 51 50 - - 47 - 45 - - - 41 - - 38 37 36 - 34 - - 31 30 - 28 - 26 25 - - 22 21 20 19 18 - 16 15 - - - - 10 - - - - - - - - -	SALEABLE		345650003
MX123 CONN ASSY 73 CKT BLK OPT0 KEY A/37	345663513	C-HSG-A0	G-CAP-0-P	TPA-A0	RS	LS	MAL	CPA	MSEAL	RSEAL	72 71 - - 68 67 66 65 64 - - - - 59 - - - - - - - - 50 - 48 47 46 45 - - - - 40 39 38 - - 35 - 33 - 31 30 - - - - 25 24 23 22 21 20 - - 17 - - 14 - - - - 9 8 7 6 5 4 - 2 1	SALEABLE		345650003
MX123 CONN ASSY 73 CKT BLK OPT0 KEY A/31	345663523	C-HSG-A0	G-CAP-0-P	TPA-A0	RS	LS	MAL	CPA	MSEAL	RSEAL	- 71 - 69 68 67 - 65 64 - - 61 60 59 58 57 - - - 53 - 51 50 - 48 47 46 45 44 - - 41 40 39 38 37 - - - 33 32 - 30 29 - 27 - 25 24 23 22 - - - - 17 - - 14 13 - 11 - - 8 7 6 - 4 3 - -	SALEABLE		345650003
MX123 CONN ASSY 73 CKT BLK OPT9 KEY A/31	345663533	C-HSG-A9	G-CAP-9-P	TPA-A9	RS	LS	MAL	CPA	MSEAL	RSEAL	72 71 70 - 68 67 66 65 64 - 62 61 60 59 - 57 - - - - - - 50 - 48 47 46 45 - - - - 40 39 38 37 - - - - - 31 30 29 - 27 - 25 24 23 22 21 20 - - - - 15 14 13 - 11 - 9 8 7 6 5 4 - - -	SALEABLE		345650003
MX123 CONN ASSY 73 CKT BLK OPT9 KEY A/30	345663543	C-HSG-A9	G-CAP-9-P	TPA-A9	RS	LS	MAL	CPA	MSEAL	RSEAL	- 71 - 69 68 67 - 65 64 - - 61 60 - 58 - - - 54 - - - 50 49 48 47 - 45 - 43 - 41 - - 38 37 36 35 - - - 32 31 - 29 28 27 - - 24 23 - - 20 19 18 17 16 - - 13 12 11 - - 8 7 - 5 4 3 2 1	SALEABLE		345650003

molex

MX123 SEALED RCPT ASSY (73 Ckt)
BOM & PIN OUT SHEET

ASSEMBLY DESCRIPTION	ASSEMBLY PART NUMBER	CONNECTOR HOUSING	GROMMET CAP	TPA	RIGHT SLIDE	LEFT SLIDE	MATE ASSIST LEVER	CPA	MAT SEAL	RING SEAL	BLOCKED TERMINALS CAVITY WITH A NUMBER INDICATES BLOCKED TERMINAL POSITION CAVITY WITHOUT A NUMBER INDICATES OPEN TERMINAL POSITION	STATUS	COMMENTS	INTEGRAL COMPONENTS SOLD SEPARATELY DRESS COVER
MX123 CONN ASSY 73 CKT BLU OPT9 KEY C/60	345663553	C-HSG-C9	G-CAP-9-P	TPA-C9	RS	LS	MAL	CPA	MSEAL	RSEAL	- - - - - - - - 64 - - - 60 - - - - - - - 52 - - - - 47 - - - - - - - - - - 37 - - - - - 32 - - - - - - - 24 23 - 21 - - - - - - - 13 12 - - - 8 - - - 4 - - -	SALEABLE		345650003
MX123 CONN ASSY 73 CKT BLU OPT9 KEY C/37	345663563	C-HSG-C9	G-CAP-9-P	TPA-C9	RS	LS	MAL	CPA	MSEAL	RSEAL	- 71 - 69 - - - 65 64 - - 61 60 - 58 - 56 55 54 - - - 50 49 - - - 45 - 43 - 41 - - - 37 36 35 - - - 31 - 29 28 - - - 24 23 - - 20 19 18 17 16 - - 13 12 11 - - 8 7 - - - 3 2 1	SALEABLE		345650003
MX123 CONN ASSY 73 CKT BLU OPT9 KEY C/41	345663573	C-HSG-C9	G-CAP-9-P	TPA-C9	RS	LS	MAL	CPA	MSEAL	RSEAL	72 71 - - - 67 66 65 64 - - - 60 59 - - - - - - - - - - - - 46 45 - - - - 40 39 38 - - 35 - 33 - 31 30 - - - - 25 24 23 22 21 20 - - 17 - - - - - - - 9 8 7 6 5 4 - 2 1	SALEABLE		345650003
MX123 CONN ASSY 73 CKT BLK OPT9 KEY A/38	345663583	C-HSG-A9	G-CAP-9-P	TPA-A9	RS	LS	MAL	CPA	MSEAL	RSEAL	72 71 - - 68 67 66 65 64 - - - 60 59 - - - - - - - - - - 48 47 46 45 - - - - 40 39 38 - - 35 - 33 - 31 30 - - - - 25 24 23 22 21 20 - - 17 - - - - - - - 9 8 7 6 5 4 - 2 1	SALEABLE		345650003
MX123 CONN ASSY 73 CKT BLK OPT0 KEY A/36	345663593	C-HSG-A0	G-CAP-0-P	TPA-A0	RS	LS	MAL	CPA	MSEAL	RSEAL	72 - 70 - 68 67 66 65 - - 62 61 - 59 - - - - - - - - 50 - 48 47 46 - - - - - 40 39 38 - - - - - - 31 - 29 - 27 - 25 24 23 22 21 20 - - 17 - - 14 13 - 11 - 9 8 7 6 5 4 - 2 1	SALEABLE		345650003
MX123 CONN ASSY 73 CKT GRY OPT0 KEY B/52	345663603	C-HSG-B0	G-CAP-0-P	TPA-B0	RS	LS	MAL	CPA	MSEAL	RSEAL	72 71 70 69 - 67 66 65 - 63 62 61 60 - 58 - 56 - 54 - 52 51 50 - - 47 - 45 44 43 42 41 40 - 38 - 36 - 34 - - 31 30 - 28 27 26 25 24 - 22 - 20 19 - 17 16 15 14 13 12 - - 9 8 - 6 5 4 3 2 1	SALEABLE		345650003
MX123 CONN ASSY 73 CKT GRY OPT0 KEY B/20	345663613	C-HSG-B0	G-CAP-0-P	TPA-B0	RS	LS	MAL	CPA	MSEAL	RSEAL	72 71 70 69 - - 66 65 - - 62 61 60 - 58 57 56 55 54 53 52 51 50 49 48 47 - - 44 - 42 41 40 - 38 37 36 35 34 33 - 31 - - - - 26 25 24 23 22 21 20 19 18 17 16 15 14 13 12 11 - 9 8 7 - - - - 2 1	SALEABLE		345650003
MX123 CONN ASSY 73 CKT BLK OPT0 KEY A/40	345663623	C-HSG-A0	G-CAP-0-P	TPA-A0	RS	LS	MAL	CPA	MSEAL	RSEAL	- 71 - - 68 67 66 65 64 - - - - - - - - - - - - 50 - 48 47 46 45 - - - 40 39 38 - - 35 - 33 - 31 30 - - - - 25 24 23 22 21 20 - - 17 - - 14 - - - - 9 - 7 6 5 4 - 2 1	SALEABLE		345650003
MX123 CONN ASSY 73 CKT BLU OPT0 KEY C/42	345663633	C-HSG-C0	G-CAP-0-P	TPA-C0	RS	LS	MAL	CPA	MSEAL	RSEAL	- 71 - 69 - - - 65 64 - - 61 60 - 58 - 56 55 54 - - - 50 49 - - - 45 - 43 42 41 - - - - - 35 - - - 31 - 29 28 27 - - - - - - 20 19 18 17 16 - - 13 12 11 - - - - - - - 3 - 1	SALEABLE		345650003
MX123 CONN ASSY 73 CKT GRY OPT0 KEY B/38	345663643	C-HSG-B0	G-CAP-0-P	TPA-B0	RS	LS	MAL	CPA	MSEAL	RSEAL	- - - 69 - - - 65 - - 62 61 60 - 58 57 56 55 54 - - - - 49 - - - 45 44 43 42 41 40 - 38 37 36 35 - - - - - - - - - - - 23 22 21 20 19 18 - - - - - 12 11 - 9 - 7 6 5 4 3 - -	SALEABLE		345650003
MX123 CONN ASSY 73 CKT GRY OPT0 KEY B/44	345663653	C-HSG-B0	G-CAP-0-P	TPA-B0	RS	LS	MAL	CPA	MSEAL	RSEAL	- - - - - 67 - - - - 62 61 60 - 58 57 56 55 54 - - - - - - - - - - - 42 41 40 - 38 37 36 35 - - - 31 - - - - - - - 23 22 21 20 19 18 - - 15 - - - - - 9 - 7 6 5 4 - - -	SALEABLE		345650003
MX123 CONN ASSY 73 CKT BLK OPT0 KEY A/41	345663663	C-HSG-A0	G-CAP-0-P	TPA-A0	RS	LS	MAL	CPA	MSEAL	RSEAL	- 71 - - 68 67 66 65 64 - - - - - - - - - - - - 50 - 48 47 46 45 - - - - 40 39 38 - - 35 - 33 - 31 30 - - - - 25 24 23 22 21 20 - - 17 - - 14 - - - - 9 8 - - 5 4 - 2 1	SALEABLE		345650003

molex

MX123 SEALED RCPT ASSY (73 Ckt)
BOM & PIN OUT SHEET

ASSEMBLY DESCRIPTION	ASSEMBLY PART NUMBER	CONNECTOR HOUSING	GROMMET CAP	TPA	RIGHT SLIDE	LEFT SLIDE	MATE ASSIST LEVER	CPA	MAT SEAL	RING SEAL	BLOCKED TERMINALS CAVITY WITH A NUMBER INDICATES BLOCKED TERMINAL POSITION CAVITY WITHOUT A NUMBER INDICATES OPEN TERMINAL POSITION	STATUS	COMMENTS	INTEGRAL COMPONENTS SOLD SEPARATELY DRESS COVER
MX123 CONN ASSY 73 CKT BLU OPT9 KEY C/54	345663673	C-HSG-C9	G-CAP-9-P	TPA-C9	RS	LS	MAL	CPA	MSEAL	RSEAL	72 - - - - - 66 - 64 - - - 60 - - - - - - - 52 - - - - 47 46 - - - - - - - - 37 - - - - - 32 - - - - - - 25 24 23 - 21 - - - - - - - 13 12 11 10 - 8 - - - 4 - - -	SALEABLE		345650003
MX123 CONN ASSY 73 CKT BLU OPT0 KEY C/37	345663693	C-HSG-C0	G-CAP-0-P	TPA-C0	RS	LS	MAL	CPA	MSEAL	RSEAL	- 71 - 69 - - - 65 64 - - 61 60 - 58 - 56 55 54 - - - 50 49 - - - 45 - 43 - 41 - - - 37 36 35 - - - 31 - 29 28 - - - 24 23 - - 20 19 18 17 16 - - 13 12 11 - - 8 7 - - - 3 2 1	SALEABLE		345650003
MX123 CONN ASSY 73 CKT BLK OPT0 KEY A/55	345663703	C-HSG-A0	G-CAP-0-P	TPA-A0	RS	LS	MAL	CPA	MSEAL	RSEAL	72 71 70 69 - - - - 64 63 62 61 60 - 58 57 56 - 54 - 52 51 50 - - - 46 45 - 43 42 41 40 - 38 37 36 - 34 - 32 31 30 - - 27 26 25 24 - 22 21 20 19 18 17 16 15 14 13 12 11 10 9 8 - 6 5 4 3 2 1	SALEABLE		345650003
MX123 CONN ASSY 73 CKT BLU OPT0 KEY C/36	345663713	C-HSG-C0	G-CAP-0-P	TPA-C0	RS	LS	MAL	CPA	MSEAL	RSEAL	- 71 - 69 - - - 65 64 - - 61 60 - 58 - 56 55 54 - - - 50 49 - - - 45 - 43 - 41 - - 38 37 36 35 - - - 31 - 29 28 - - - 24 23 - - 20 19 18 17 16 - - 13 12 11 - - 8 7 - - - 3 2 1	SALEABLE		345650003
MX123 CONN ASSY 73 CKT BLK OPT0 KEY A/38	345663723	C-HSG-A0	G-CAP-0-P	TPA-A0	RS	LS	MAL	CPA	MSEAL	RSEAL	72 71 - - 68 67 66 65 64 - - - 60 59 - - - - - - - - - - 48 47 46 45 - - - - 40 39 38 - - 35 - 33 - 31 30 - - - - 25 24 23 22 21 20 - - 17 - - - - - - - 9 8 7 6 5 4 - 2 1	SALEABLE		345650003
MX123 CONN ASSY 73 CKT GRY OPT0 KEY B/50	345663733	C-HSG-B0	G-CAP-0-P	TPA-B0	RS	LS	MAL	CPA	MSEAL	RSEAL	- - - 69 - - - 65 64 63 - - - - - - - - - - - - 49 - - - 45 44 43 - 22 21 20 19 18 17 - - - - 12 11 - - - 7 6 5 4 3 2 1	SALEABLE		345650003
MX123 CONN ASSY 73 CKT BLU OPT0 KEY C/36	345663743	C-HSG-C0	G-CAP-0-P	TPA-C0	RS	LS	MAL	CPA	MSEAL	RSEAL	- 71 - 69 - 67 - 65 64 - - 61 60 - 58 - 56 55 54 - - - 50 49 - - - 45 - 43 - 41 - - - 37 36 35 - - - 31 - 29 28 - - - 24 23 - - 20 19 18 17 16 - - 13 12 11 - - 8 7 - - - 3 2 1	SALEABLE		345650003
MX123 CONN ASSY 73 CKT BLU OPT0 KEY C/35	345663753	C-HSG-C0	G-CAP-0-P	TPA-C0	RS	LS	MAL	CPA	MSEAL	RSEAL	- 71 - 69 - 67 - 65 64 - - 61 60 - 58 - 56 55 54 - - - 50 49 - - - 45 - 43 - 41 - - 38 37 36 35 - - - 31 - 29 28 - - - 24 23 - - 20 19 18 17 16 - - 13 12 11 - - 8 7 - - - 3 2 1	SALEABLE		345650003
MX123 CONN ASSY 73 CKT BLU OPT0 KEY C/37	345663763	C-HSG-C0	G-CAP-0-P	TPA-C0	RS	LS	MAL	CPA	MSEAL	RSEAL	- 71 - 69 - 67 - 65 64 - - 61 60 - 58 - - - 54 - - - 50 49 - - - 45 - 43 - 41 - - 38 37 36 35 - - - 31 - 29 28 - - - 24 23 - - 20 19 18 17 16 - - 13 12 11 - - 8 7 - - - 3 2 1	SALEABLE		345650003
MX123 CONN ASSY 73 CKT BLK OPT0 KEY A/31	345663773	C-HSG-A0	G-CAP-0-P	TPA-A0	RS	LS	MAL	CPA	MSEAL	RSEAL	72 71 - - 68 67 66 65 64 - 62 61 60 59 - 57 - - - - - - - - 48 47 46 45 - - - - 40 - 38 37 - 35 - 33 - 31 30 29 - 27 - 25 24 23 22 21 20 - - 17 - - - 13 - 11 - 9 8 7 6 5 4 - 2 1	SALEABLE		345650003
MX123 CONN ASSY 73 CKT BLK OPT0 KEY A/34	345663783	C-HSG-A0	G-CAP-0-P	TPA-A0	RS	LS	MAL	CPA	MSEAL	RSEAL	72 71 - - 68 67 66 65 64 - 62 61 60 59 - 57 - - - - - - - - 48 47 46 45 - - - - 40 - 38 37 - 35 - 33 - 31 30 29 - 27 - 25 24 23 22 21 20 - - - - - - 13 - 11 - 9 8 7 6 5 4 - - -	SALEABLE		345650003
MX123 CONN ASSY 73 CKT BLK OPT0 KEY A/38	345663793	C-HSG-A0	G-CAP-0-P	TPA-A0	RS	LS	MAL	CPA	MSEAL	RSEAL	72 - - 69 68 67 66 65 - - 62 61 - 59 - - - - - - - - 50 - 48 47 46 - - - - - 40 39 38 - - 35 - 33 - 31 - 29 - 27 - 25 24 - 22 - 20 - - 17 - - 14 13 - 11 - 9 - 7 6 - 4 - 2 1	SALEABLE		345650003

molex

MX123 SEALED RCPT ASSY (73 Ckt)
BOM & PIN OUT SHEET

ASSEMBLY DESCRIPTION	ASSEMBLY PART NUMBER	CONNECTOR HOUSING	GROMMET CAP	TPA	RIGHT SLIDE	LEFT SLIDE	MATE ASSIST LEVER	CPA	MAT SEAL	RING SEAL	BLOCKED TERMINALS CAVITY WITH A NUMBER INDICATES BLOCKED TERMINAL POSITION CAVITY WITHOUT A NUMBER INDICATES OPEN TERMINAL POSITION	STATUS	COMMENTS	INTEGRAL COMPONENTS SOLD SEPARATELY DRESS COVER
MX123 CONN ASSY 73 CKT BLK OPT0 KEY A/32	345663803	C-HSG-A0	G-CAP-0-P	TPA-A0	RS	LS	MAL	CPA	MSEAL	RSEAL	- - 70 - - - - 65 - - - 61 60 - 58 57 - 55 54 - 52 51 - 49 - 47 - 45 - - - 41 40 - 38 37 - - 34 - - - 31 - - 28 - 26 25 24 - 22 21 - 19 18 - 16 15 - - - - - - - 7 6 - - - - -	SALEABLE		345650003
MX123 CONN ASSY 73 CKT BLU OPT0 KEY C/42	345663813	C-HSG-C0	G-CAP-0-P	TPA-C0	RS	LS	MAL	CPA	MSEAL	RSEAL	- 71 - 69 - 67 - 65 64 - - 61 60 - 58 - 56 55 54 - - - 50 49 - - - 45 - 43 - 41 - - - - - 35 - - - 31 - 29 28 27 - - - 23 - - - 19 18 17 16 - - - 12 11 - - - 7 - - - 3 - 1	SALEABLE		345650003
MX123 CONN ASSY 73 CKT BLK OPT0 KEY A/30	345663823	C-HSG-A0	G-CAP-0-P	TPA-A0	RS	LS	MAL	CPA	MSEAL	RSEAL	72 71 - - 68 67 66 65 64 - 62 - 60 59 - - - - - - - - 50 - 48 47 46 45 - - 42 - 40 39 38 - - 35 - 33 - 31 30 29 28 - - 25 24 23 22 21 20 - - 17 - - 14 13 12 - - 9 8 7 6 5 4 - 2 1	SALEABLE		345650003
MX123 CONN ASSY 73 CKT BLK OPT0 KEY A/37	345663833	C-HSG-A0	G-CAP-0-P	TPA-A0	RS	LS	MAL	CPA	MSEAL	RSEAL	72 71 - - 68 67 66 65 64 - - - 60 59 58 - - - - - - - 50 - 48 47 46 45 - - - - 40 39 38 - - 35 - 33 - 31 30 - - - - 25 24 - 22 21 20 - - 17 - - 14 - - - - 9 - 7 6 5 4 - 2 1	SALEABLE		345650003
MX123 CONN ASSY 73 CKT BLK OPT0 KEY A/51	345663843	C-HSG-A0	G-CAP-0-P	TPA-A0	RS	LS	MAL	CPA	MSEAL	RSEAL	- - - - - - - 65 - - - 61 - - 58 57 56 - - - - 51 50 - - 47 46 45 - - - - - - 38 37 36 - - - - 31 30 - - - 26 - - - 22 21 20 - - - - 15 14 - - - 10 - - - - - - - - -	SALEABLE		345650003
MX123 CONN ASSY 73 CKT BLK OPT0 KEY A/53	345663853	C-HSG-A0	G-CAP-0-P	TPA-A0	RS	LS	MAL	CPA	MSEAL	RSEAL	- - - - - - - - - - - 61 - - 58 57 56 - - - - 51 50 - - 47 46 - - - - - - - 38 37 36 - - - - 31 30 - - - 26 - - - 22 21 20 - - - - 15 14 - - - 10 - - - - - - - - -	SALEABLE		345650003
MX123 CONN ASSY 73 CKT GRY OPT0 KEY B/51	345663863	C-HSG-B0	G-CAP-0-P	TPA-B0	RS	LS	MAL	CPA	MSEAL	RSEAL	- - - 69 - - - 65 64 63 - - - - - - - - - - - - 49 - - - 45 44 43 - - - - - - - - - - - - - - - - - - - 23 22 21 20 19 18 - - - - - 12 11 - 9 - 7 6 5 4 3 - -	SALEABLE		345650003
MX123 CONN ASSY 73 CKT GRY OPT0 KEY B/34	345663873	C-HSG-B0	G-CAP-0-P	TPA-B0	RS	LS	MAL	CPA	MSEAL	RSEAL	72 71 70 69 68 67 66 65 64 - 62 61 60 - - - - - 54 53 52 51 - - - 47 - - 44 - 42 41 40 - - - - - - 33 32 31 30 - 28 - 26 25 24 - - - 20 19 - 17 - - - - 12 11 10 9 8 - - - - - 2 1	SALEABLE		345650003
MX123 CONN ASSY 73 CKT GRY OPT0 KEY B/35	345663883	C-HSG-B0	G-CAP-0-P	TPA-B0	RS	LS	MAL	CPA	MSEAL	RSEAL	72 71 70 69 68 - - 65 64 63 62 61 60 - - - - - 54 - 52 51 - - - 47 46 - 44 43 42 41 40 - - - - - - - 32 31 30 - 28 27 26 25 24 - - - 20 19 - 17 - - - - 12 11 10 9 - - - - - - 2 1	SALEABLE		345650003
MX123 CONN ASSY 73 CKT BLU OPT0 KEY C/34	345663893	C-HSG-C0	G-CAP-0-P	TPA-C0	RS	LS	MAL	CPA	MSEAL	RSEAL	- 71 - 69 - - - 65 64 - - 61 60 - 58 - 56 55 54 - - - 50 49 - - - 45 - 43 - 41 40 39 38 37 36 35 - - - 31 - 29 28 - - - 24 23 - - 20 19 18 17 16 - - 13 12 11 - - 8 7 - - - 3 2 1	SALEABLE		345650003
MX123 CONN ASSY 73 CKT GRY OPT0 KEY B/54	345663903	C-HSG-B0	G-CAP-0-P	TPA-B0	RS	LS	MAL	CPA	MSEAL	RSEAL	72 71 70 69 68 67 66 - 64 63 62 61 60 - 58 - 56 - 54 - 52 51 50 - - 47 - 45 - 43 42 41 40 - 38 - 36 - 34 - 32 31 30 - - 27 26 25 - - 22 - 20 19 18 17 16 15 14 13 12 11 10 9 8 - 6 5 4 3 2 1	SALEABLE		345650003
MX123 CONN ASSY 73 CKT BLK OPT0 KEY A/39	345663913	C-HSG-A0	G-CAP-0-P	TPA-A0	RS	LS	MAL	CPA	MSEAL	RSEAL	72 - - - 68 67 66 65 - - 62 61 - 59 - - - - - - - - 50 - 48 47 46 - - - - - 40 39 38 - - 35 - 33 - 31 - 29 - 27 - 25 24 - 22 - 20 - - 17 - - 14 13 - 11 - 9 - 7 6 - 4 - 2 1	SALEABLE		345650003

molex

MX123 SEALED RCPT ASSY (73 Ckt)
BOM & PIN OUT SHEET

ASSEMBLY DESCRIPTION	ASSEMBLY PART NUMBER	CONNECTOR HOUSING	GROMMET CAP	TPA	RIGHT SLIDE	LEFT SLIDE	MATE ASSIST LEVER	CPA	MAT SEAL	RING SEAL	BLOCKED TERMINALS CAVITY WITH A NUMBER INDICATES BLOCKED TERMINAL POSITION CAVITY WITHOUT A NUMBER INDICATES OPEN TERMINAL POSITION	STATUS	COMMENTS	INTEGRAL COMPONENTS SOLD SEPARATELY DRESS COVER
MX123 CONN ASSY 73 CKT GRY OPT0 KEY B/36	345663923	C-HSG-B0	G-CAP-0-P	TPA-B0	RS	LS	MAL	CPA	MSEAL	RSEAL	- 71 - 69 - 67 - 65 64 63 62 61 - - 58 57 56 - - - - 51 - 49 - 47 - 45 44 43 42 41 - - 38 37 36 - - - - - - - - - - - - - 22 21 20 - - 17 - - 15 14 13 12 11 - - - - 6 5 4 3 2 1	SALEABLE		345650003
MX123 CONN ASSY 73 CKT BLK OPT0 KEY A/35	345663933	C-HSG-A0	G-CAP-0-P	TPA-A0	RS	LS	MAL	CPA	MSEAL	RSEAL	72 - - - 68 67 66 65 - - 62 61 - 59 - - - - - - - - 50 - 48 47 46 - - - - - 40 39 38 - - 35 - 33 - 31 - 29 - 27 - 25 24 23 22 21 20 - - 17 - - 14 13 - 11 - 9 8 7 6 5 4 - 2 1	SALEABLE		345650003
MX123 CONN ASSY 73 CKT BLU OPT0 KEY C/32	345663943	C-HSG-C0	G-CAP-0-P	TPA-C0	RS	LS	MAL	CPA	MSEAL	RSEAL	- 71 - 69 - 67 - 65 64 63 62 61 - - 58 57 56 - - - - 51 - 49 - 47 - 45 44 43 42 41 - - 38 37 36 - - - - - - - - - - - - 23 22 21 20 19 18 17 - 15 14 13 12 11 - - - 7 6 5 4 3 2 1	SALEABLE		345650003
MX123 CONN ASSY 73 CKT BLU OPT0 KEY C/35	345663953	C-HSG-C0	G-CAP-0-P	TPA-C0	RS	LS	MAL	CPA	MSEAL	RSEAL	- 71 - 69 - 67 66 65 64 - - 61 60 - 58 - 56 55 54 - - - 50 49 - - - 45 - 43 - 41 - - 38 37 36 35 - - - 31 - 29 28 27 - - 24 - - - - 19 18 17 16 - - - 12 11 10 9 8 - - - - 3 2 1	SALEABLE		345650003
MX123 CONN ASSY 73 CKT BLU OPT0 KEY C/36	345663963	C-HSG-C0	G-CAP-0-P	TPA-C0	RS	LS	MAL	CPA	MSEAL	RSEAL	- 71 - 69 - - - 65 64 - - 61 60 - 58 - 56 55 54 - - - 50 49 - - - 45 - 43 - 41 - - - 37 36 35 - - - 31 - 29 28 27 - - 24 23 - - 20 19 18 17 16 - - 13 12 11 - - 8 7 - - - 3 2 1	SALEABLE		345650003
MX123 CONN ASSY 73 CKT BLU OPT0 KEY C/33	345663973	C-HSG-C0	G-CAP-0-P	TPA-C0	RS	LS	MAL	CPA	MSEAL	RSEAL	- 71 - 69 - - 66 65 64 - - 61 60 - 58 - 56 55 54 - - - 50 49 - - - 45 - 43 - 41 - - - 37 36 35 - - - 31 - 29 28 27 - - 24 23 - - 20 19 18 17 16 - - 13 12 11 10 9 8 7 - - - 3 2 1	SALEABLE		345650003
MX123 CONN ASSY 73 CKT BLK OPT0 KEY A/38	345663983	C-HSG-A0	G-CAP-0-P	TPA-A0	RS	LS	MAL	CPA	MSEAL	RSEAL	- - - - 68 67 66 65 - - 62 61 - - - - - - - - - - 50 - 48 47 46 - - - - - - 39 38 - - 35 - 33 - 31 - 29 - 27 - 25 24 23 22 21 20 - - 17 - - 14 13 - 11 - 9 8 7 6 5 4 - 2 1	SALEABLE		345650003
MX123 CONN ASSY 73 CKT BLK OPT0 KEY A/38	345663993	C-HSG-A0	G-CAP-0-P	TPA-A0	RS	LS	MAL	CPA	MSEAL	RSEAL	72 71 - - 68 67 66 65 64 - - - - 59 - - - - - - - - 50 - 48 47 46 45 - - - - - 39 38 - - 35 - 33 - 31 30 - - - - 25 24 23 22 21 20 - - 17 - - 14 - - - - 9 8 7 6 5 4 - 2 1	SALEABLE		345650003
MX123 CONN ASSY 73 CKT GRY OPT0 KEY B/44	345664003	C-HSG-B0	G-CAP-0-P	TPA-B0	RS	LS	MAL	CPA	MSEAL	RSEAL	72 71 70 69 68 - - 65 - - 62 61 60 - 58 - 56 - 54 - 52 51 - - - 47 46 45 44 - 42 41 40 - 38 - 36 - 34 - - 31 30 - 28 - 26 25 - - 22 - 20 19 - 17 16 - 14 13 12 11 10 9 8 - - - - - 2 1	SALEABLE		345650003
MX123 CONN ASSY 73 CKT GRY OPT0 KEY B/34	345664013	C-HSG-B0	G-CAP-0-P	TPA-B0	RS	LS	MAL	CPA	MSEAL	RSEAL	- 71 - 69 - 67 - 65 64 63 62 61 - - 58 57 56 - - - - 51 - 49 - 47 - 45 44 43 42 41 - - 38 37 36 - - - - - - - - - - - - 23 22 21 20 19 18 - - 15 14 13 12 11 - 9 - 7 6 5 4 3 - -	SALEABLE		345650003
MX123 CONN ASSY 73 CKT GRY OPT0 KEY B/49	345664023	C-HSG-B0	G-CAP-0-P	TPA-B0	RS	LS	MAL	CPA	MSEAL	RSEAL	- - - 69 - - - 65 64 63 - - - - - - - - - - - - - 49 - - - 45 44 43 - - - - - - - - - - - - - - - - - - - 23 22 21 20 19 18 17 - - - - 12 11 - - - 7 6 5 4 3 2 1	SALEABLE		345650003
MX123 CONN ASSY 73 CKT BLU OPT0 KEY C/36	345664033	C-HSG-C0	G-CAP-0-P	TPA-C0	RS	LS	MAL	CPA	MSEAL	RSEAL	- 71 - 69 - 67 66 65 64 - - 61 60 - - - 56 55 54 - - - 50 49 - - 46 45 - 43 - 41 - - - 37 36 35 - - - 31 - 29 28 27 - - 24 23 - - - 19 18 - 16 - - - 12 11 10 9 8 7 - - - 3 2 -	SALEABLE		345650003

molex

MX123 SEALED RCPT ASSY (73 Ckt)
BOM & PIN OUT SHEET

ASSEMBLY DESCRIPTION	ASSEMBLY PART NUMBER	CONNECTOR HOUSING	GROMMET CAP	TPA	RIGHT SLIDE	LEFT SLIDE	MATE ASSIST LEVER	CPA	MAT SEAL	RING SEAL	BLOCKED TERMINALS CAVITY WITH A NUMBER INDICATES BLOCKED TERMINAL POSITION CAVITY WITHOUT A NUMBER INDICATES OPEN TERMINAL POSITION	STATUS	COMMENTS	INTEGRAL COMPONENTS SOLD SEPARATELY DRESS COVER
MX123 CONN ASSY 73 CKT BLK OPT0 KEY A/36	345664043	C-HSG-A0	G-CAP-0-P	TPA-A0	RS	LS	MAL	CPA	MSEAL	RSEAL	72 - - - 68 - 66 65 - - 62 61 - 59 58 - - - - - - - 50 - 48 47 46 - - - - - 40 39 38 - - 35 - 33 - - 31 - 29 - 27 - 25 24 - 22 21 20 - - 17 - - 14 13 - 11 - 9 8 7 6 5 4 - 2 1	SALEABLE		345650003
MX123 CONN ASSY 73 CKT BLK OPT0 KEY A/43	345664053	C-HSG-A0	G-CAP-0-P	TPA-A0	RS	LS	MAL	CPA	MSEAL	RSEAL	- 71 70 - 68 - - - 64 - 62 61 - 59 58 - - 55 54 - 52 51 50 - 48 - - 45 - - - 41 - 39 38 - - - 34 - 32 - - - - - - 25 - 23 22 - - 19 18 - - - - - 12 - - 9 8 7 6 - - - - -	SALEABLE		345650003
MX123 CONN ASSY 73 CKT GRY OPT0 KEY B/24	345664063	C-HSG-B0	G-CAP-0-P	TPA-B0	RS	LS	MAL	CPA	MSEAL	RSEAL	72 71 70 69 - - 66 65 - 63 62 61 60 - - 57 56 55 - 53 52 51 50 49 48 47 - - 44 43 42 41 40 - - 37 36 35 34 33 - 31 - - - - 26 25 24 - - 21 20 19 18 - 16 - 14 - 12 11 - 9 - 7 6 5 4 3 2 -	SALEABLE		345650003
MX123 CONN ASSY 73 CKT BLK OPT0 KEY A/36	345664073	C-HSG-A0	G-CAP-0-P	TPA-A0	RS	LS	MAL	CPA	MSEAL	RSEAL	- 71 - 69 68 67 - 65 64 - - 61 60 - 58 - - - 54 - - - 50 49 48 47 - 45 - 43 - 41 - - 38 - - 35 - -			
											- 31 - 29 28 27 - - 24 23 - - 20 - - 17 16 - - 13 12 11 - - 8 7 - 5 4 - 2 1	SALEABLE		345650003
MX123 CONN ASSY 73 CKT BLU OPT0 KEY C/42	345664083	C-HSG-C0	G-CAP-0-P	TPA-C0	RS	LS	MAL	CPA	MSEAL	RSEAL	- 71 - 69 - 67 66 65 64 - - 61 60 - - - 56 55 54 - - - 50 49 - - 46 45 - 43 - 41 - - - - - 35 - -			
											- 31 - 29 28 - - - - 23 - - - 19 18 - 16 - - - 12 11 10 9 - 7 - - - 3 - -	SALEABLE		345650003
MX123 CONN ASSY 73 CKT BLK OPT0 KEY A/37	345664093	C-HSG-A0	G-CAP-0-P	TPA-A0	RS	LS	MAL	CPA	MSEAL	RSEAL	72 - - - 68 - 66 65 - - 62 61 - 59 58 - - - - - - - 50 - 48 - 46 - - - - - 40 39 38 - - 35 - 33 - - 31 - 29 - 27 - 25 24 - 22 21 20 - - 17 - - 14 13 - 11 - 9 8 7 6 5 4 - 2 1	SALEABLE		345650003
MX123 CONN ASSY 73 CKT BLK OPT0 KEY A/29	345664103	C-HSG-A0	G-CAP-0-P	TPA-A0	RS	LS	MAL	CPA	MSEAL	RSEAL	- - 70 - - - - 65 - - - 61 - - 58 57 56 55 54 53 - 51 50 - - 47 - - - - - 41 - - 38 37 36 - 34 - - 31 30 - 28 - - 25 - - 22 21 20 19 18 - 16 15 - - - - - - - - - - - - - - -	SALEABLE		345650003
MX123 CONN ASSY 73 CKT GRY OPT0 KEY B/19	345664113	C-HSG-B0	G-CAP-0-P	TPA-B0	RS	LS	MAL	CPA	MSEAL	RSEAL	72 71 70 69 - - 66 65 - 63 62 61 60 59 - 57 56 55 54 53 52 51 50 49 48 47 - - 44 43 42 41 40 39 - 37 36 35 34 33 - 31 - - - - 26 25 24 23 - 21 20 19 18 - 16 - 14 - 12 11 - 9 8 7 6 5 4 3 2 -	SALEABLE		345650003
MX123 CONN ASSY 73 CKT BLK OPT9 KEY A/42	345664123	C-HSG-A9	G-CAP-9-P	TPA-A9	RS	LS	MAL	CPA	MSEAL	RSEAL	- 71 70 - 68 - - - 64 - 62 61 - 59 58 - - 55 54 - 52 51 50 - 48 - - 45 - - - 41 - 39 38 - - - 34 - 32 - - - - 27 - 25 - 23 22 - - 19 18 - - - - - 12 - - 9 8 7 6 - - - - -	SALEABLE		345650003
MX123 CONN ASSY 73 CKT GRY OPT9 KEY B/25	345664133	C-HSG-B9	G-CAP-9-P	TPA-B9	RS	LS	MAL	CPA	MSEAL	RSEAL	72 71 70 69 - - 66 65 - 63 62 61 60 - - 57 56 55 - 53 52 51 50 49 48 47 - - 44 43 42 41 40 - - 37 36 35 34 33 - 31 - - - - 26 25 24 - - 21 20 19 18 - 16 - 14 - 12 11 - - - 7 6 5 4 3 2 -	SALEABLE		345650003
MX123 CONN ASSY 73 CKT GRY OPT0 KEY B/22	345664143	C-HSG-B0	G-CAP-0-P	TPA-B0	RS	LS	MAL	CPA	MSEAL	RSEAL	72 71 70 69 - - 66 65 - 63 62 61 60 - - 57 56 55 - 53 52 51 50 49 48 47 - - 44 43 42 41 40 - - 37 36 35 34 33 - 31 - - - - 26 25 24 - - 21 20 19 18 - 16 15 14 13 12 11 - - 8 7 6 5 4 3 2 -	SALEABLE		345650003
MX123 CONN ASSY 73 CKT GRY OPT0 KEY B/37	345664153	C-HSG-B0	G-CAP-0-P	TPA-B0	RS	LS	MAL	CPA	MSEAL	RSEAL	- 71 - 69 - 67 - 65 64 63 62 61 - - 58 57 56 - - - - 51 - 49 - 47 - 45 - 43 42 41 - - 38 37 36 - - - - - - - - - - - - - 22 21 20 - - 17 - 15 14 13 12 11 - - - - 6 5 4 3 2 1	SALEABLE		345650003

MX123 SEALED RCPT ASSY (73 Ckt)
BOM & PIN OUT SHEET

ASSEMBLY DESCRIPTION	ASSEMBLY PART NUMBER	CONNECTOR HOUSING	GROMMET CAP	TPA	RIGHT SLIDE	LEFT SLIDE	MATE ASSIST LEVER	CPA	MAT SEAL	RING SEAL	BLOCKED TERMINALS CAVITY WITH A NUMBER INDICATES BLOCKED TERMINAL POSITION CAVITY WITHOUT A NUMBER INDICATES OPEN TERMINAL POSITION	STATUS	COMMENTS	INTEGRAL COMPONENTS SOLD SEPARATELY DRESS COVER
MX123 CONN ASSY 73 CKT GRY OPT0 KEY B/35	345664163	C-HSG-B0	G-CAP-0-P	TPA-B0	RS	LS	MAL	CPA	MSEAL	RSEAL	- 71 - 69 - 67 - 65 64 63 62 61 - - 58 57 56 - - - - 51 - 49 - 47 - 45 44 43 42 41 - - 38 37 36 - - - - - - - - - - - - - 23 22 21 20 19 18 - - 15 14 13 12 11 - 9 - - 6 5 4 3 - -	SALEABLE		345650003
MX123 CONN ASSY 73 CKT BLK OPT0 KEY A/42	345664173	C-HSG-A0	G-CAP-0-P	TPA-A0	RS	LS	MAL	CPA	MSEAL	RSEAL	- - - - 68 67 66 65 - - 62 61 - - - 57 - - - - - - 50 - 48 - 46 - - - - - 40 39 - 37 - 35 - 33 - - 31 - 29 - 27 - - 24 23 22 - 20 - - 17 - - 14 13 - 11 - - - 7 6 - 4 - 2 1	SALEABLE		345650003
MX123 CONN ASSY 73 CKT BLU OPT0 KEY C/41	345664183	C-HSG-C0	G-CAP-0-P	TPA-C0	RS	LS	MAL	CPA	MSEAL	RSEAL	- 71 - 69 - 67 - 65 64 - - 61 60 - - - 56 55 54 - - - 50 49 - - - 45 - 43 - 41 - - 38 37 36 35 - - - - 31 - 29 28 27 - - 24 - - - - 19 18 - 16 - - - 12 11 - - 8 - - - - 3 2 -	SALEABLE		345650003
MX123 CONN ASSY 73 CKT BLU OPT0 KEY C/38	345664193	C-HSG-C0	G-CAP-0-P	TPA-C0	RS	LS	MAL	CPA	MSEAL	RSEAL	72 - 70 - 68 67 66 - - 63 62 - - 59 - 57 - - - 53 52 51 - - 48 47 46 - 44 - 42 - 40 39 - - - - 34 33 - 32 - 30 - - 27 26 25 - - 22 21 - - - - - 15 14 - - - 10 9 - - 6 5 4 - - -	SALEABLE		345650003
MX123 CONN ASSY 73 CKT GRY OPT0 KEY B/48	345664203	C-HSG-B0	G-CAP-0-P	TPA-B0	RS	LS	MAL	CPA	MSEAL	RSEAL	72 71 70 69 68 67 66 65 - 63 62 61 60 - 58 - 56 - 54 - 52 51 - - - 47 - 45 44 43 42 41 40 - 38 - 36 - 34 - - - 31 30 - 28 27 26 25 - - 22 - 20 19 - 17 16 - 14 13 12 11 10 9 8 - - - - - 2 1	SALEABLE		345650003
MX123 CONN ASSY 73 CKT BLK OPT0 KEY A/36	345664213	C-HSG-A0	G-CAP-0-P	TPA-A0	RS	LS	MAL	CPA	MSEAL	RSEAL	- - 70 69 - - - - - 63 62 61 - - - 57 56 55 54 53 52 51 - 49 - - - - 44 43 42 41 - - - 37 36 - 34 33 - 32 - - 29 28 27 26 - - 23 - - - 19 18 - 16 15 - 13 12 11 10 - 8 - - - - 3 - -	SALEABLE		345650003
MX123 CONN ASSY 73 CKT BLK OPT0 KEY A/38	345664223	C-HSG-A0	G-CAP-0-P	TPA-A0	RS	LS	MAL	CPA	MSEAL	RSEAL	- - 70 69 - - - - - 63 62 61 - - 58 57 56 55 54 53 52 51 - 49 - - - - 44 43 42 41 - - - 37 36 - 34 - - 32 - - 29 28 27 26 - - - - - - 19 18 - 16 15 - 13 12 11 10 - - - - - - 3 - -	SALEABLE		345650003
MX123 CONN ASSY 73 CKT GRY OPT0 KEY B/23	345664233	C-HSG-B0	G-CAP-0-P	TPA-B0	RS	LS	MAL	CPA	MSEAL	RSEAL	72 71 70 - 68 67 66 - - - 62 61 60 59 58 57 56 55 54 53 52 51 50 - 48 47 46 - - - 42 41 40 39 38 37 36 35 34 33 - 32 31 30 29 28 27 26 25 24 - - - - - - 17 16 15 14 13 - - 10 - 8 - - - - - 2 1	SALEABLE		345650003
MX123 CONN ASSY 73 CKT BLK OPT0 KEY A/21	345664243	C-HSG-A0	G-CAP-0-P	TPA-A0	RS	LS	MAL	CPA	MSEAL	RSEAL	72 71 70 69 68 67 66 65 64 63 62 - 60 59 - - - 55 54 53 52 - - 49 48 - - 45 44 43 42 41 40 39 - - - 35 34 33 - 32 - - 29 28 27 - 25 24 23 - - - 19 18 17 16 - - 13 12 11 - 9 8 7 6 5 4 3 2 1	SALEABLE		345650003
MX123 CONN ASSY 73 CKT BLK OPT0 KEY A/23	345664253	C-HSG-A0	G-CAP-0-P	TPA-A0	RS	LS	MAL	CPA	MSEAL	RSEAL	72 71 70 69 68 67 66 - 64 63 62 - 60 59 - - - 55 54 53 52 - - 49 48 - - - 44 43 42 41 40 39 - - - 35 34 33 - 32 - - 29 28 27 - 25 24 23 - - - 19 18 17 16 - - 13 12 11 - 9 8 7 6 5 4 3 2 1	SALEABLE		345650003
MX123 CONN ASSY 73 CKT GRY OPT0 KEY B/36	345664263	C-HSG-B0	G-CAP-0-P	TPA-B0	RS	LS	MAL	CPA	MSEAL	RSEAL	- - - - - 67 66 - - 63 - - - 59 58 57 56 55 - 53 - - 50 49 48 - - 45 - 43 - - - 39 38 37 36 35 34 33 - - - - 29 - 27 - - - 23 22 21 - - 18 - 16 15 14 13 - - - - 8 7 6 5 4 3 - -	SALEABLE		345650003
MX123 CONN ASSY 73 CKT GRY OPT0 KEY B/40	345664273	C-HSG-B0	G-CAP-0-P	TPA-B0	RS	LS	MAL	CPA	MSEAL	RSEAL	- - - - - - - - - 63 - - - 59 58 57 56 55 - 53 - - 50 49 48 - 46 - - 43 - - - 39 38 37 36 35 34 33 - - - - 29 - 27 - - - 23 22 21 - - 18 - 16 15 14 - - - - - - 7 6 5 4 3 - -	SALEABLE		345650003

molex

MX123 SEALED RCPT ASSY (73 Ckt)
BOM & PIN OUT SHEET

ASSEMBLY DESCRIPTION	ASSEMBLY PART NUMBER	CONNECTOR HOUSING	GROMMET CAP	TPA	RIGHT SLIDE	LEFT SLIDE	MATE ASSIST LEVER	CPA	MAT SEAL	RING SEAL	BLOCKED TERMINALS CAVITY WITH A NUMBER INDICATES BLOCKED TERMINAL POSITION CAVITY WITHOUT A NUMBER INDICATES OPEN TERMINAL POSITION	STATUS	COMMENTS	INTEGRAL COMPONENTS SOLD SEPARATELY DRESS COVER
MX123 CONN ASSY 73 CKT BLK OPT0 KEY A/38	345664283	C-HSG-A0	G-CAP-0-P	TPA-A0	RS	LS	MAL	CPA	MSEAL	RSEAL	72 71 - - 68 67 66 65 64 - - - - 59 58 - - - - - - - 50 - 48 47 46 45 - - - - 40 39 38 - - 35 - 33 - - 31 30 - - - - 25 24 - 22 21 20 - - 17 - - - 14 - - - - 9 - 7 6 5 4 - 2 1	SALEABLE		345650003
MX123 CONN ASSY 73 CKT GRY OPT0 KEY B/38	345664293	C-HSG-B0	G-CAP-0-P	TPA-B0	RS	LS	MAL	CPA	MSEAL	RSEAL	72 71 70 69 68 - - 65 64 - 62 61 60 - - - - - 54 - 52 51 - - - 47 46 - 44 - 42 41 40 - - - - - - - 32 31 30 - 28 - 26 25 24 - - - 20 19 - 17 - - - - 12 11 10 9 - - - - - - 2 1	SALEABLE		345650003
MX123 CONN ASSY 73 CKT BLK OPT0 KEY A/33	345664303	C-HSG-A0	G-CAP-0-P	TPA-A0	RS	LS	MAL	CPA	MSEAL	RSEAL	72 71 - - - - 66 - - - 62 - 60 - - - - 55 54 53 52 51 - - - - 46 45 44 43 42 - 40 39 - - - 35 - - - - - - - - 26 25 - - 22 21 - - - 17 - 15 14 - - - - - 8 7 6 5 4 3 2 -	SALEABLE		345650003
MX123 CONN ASSY 73 CKT GRY OPT0 KEY B/35	345664313	C-HSG-B0	G-CAP-0-P	TPA-B0	RS	LS	MAL	CPA	MSEAL	RSEAL	72 71 70 69 68 67 66 65 64 - 62 61 60 - - - - - 54 - 52 51 - - - 47 - 45 44 - 42 41 40 - - - - - - - 32 31 30 - 28 - 26 25 24 - - - 20 19 - 17 - - - - 12 11 10 9 8 - - - - - 2 1	SALEABLE		345650003
MX123 CONN ASSY 73 CKT GRY OPT0 KEY B/37	345664323	C-HSG-B0	G-CAP-0-P	TPA-B0	RS	LS	MAL	CPA	MSEAL	RSEAL	- 71 - 69 - 67 - 65 64 63 62 61 - - 58 57 56 - - - - 51 - 49 - 47 - 45 44 43 42 41 - - 38 37 36 - - - - - - - - - - - - 23 22 21 20 - - - - 15 14 13 12 11 - 9 - - 6 5 4 3 - -	SALEABLE		345650003
MX123 CONN ASSY 73 CKT BLK OPT0 KEY A/40	345664333	C-HSG-A0	G-CAP-0-P	TPA-A0	RS	LS	MAL	CPA	MSEAL	RSEAL	- - - - 68 - 66 65 - - 62 61 - - 58 57 - - - - - - 50 - 48 - 46 - - - - - 40 39 - 37 - 35 - 33 - 31 - 29 - 27 - - 24 - 22 21 20 - - 17 - - 14 13 - 11 - - 8 7 6 5 4 - 2 1	SALEABLE		345650003
MX123 CONN ASSY 73 CKT BLK OPT0 KEY A/39	345664343	C-HSG-A0	G-CAP-0-P	TPA-A0	RS	LS	MAL	CPA	MSEAL	RSEAL	- - - - 68 67 66 65 - - 62 61 - - - 57 - - - - - - 50 - 48 - 46 - - - - - 40 39 - 37 - 35 - 33 - 31 - 29 - 27 - - 24 23 22 21 20 - - 17 - - 14 13 - 11 - - 8 7 6 5 4 - 2 1	SALEABLE		345650003
MX123 CONN ASSY 73 CKT BLU OPT0 KEY C/37	345664353	C-HSG-C0	G-CAP-0-P	TPA-C0	RS	LS	MAL	CPA	MSEAL	RSEAL	- 71 - 69 - 67 66 65 64 - - 61 60 - - - 56 55 54 - - - 50 49 - - 46 45 - 43 - 41 - - 38 37 36 35 - - - 31 - 29 28 27 - - 24 - - - - 19 18 - 16 - - - 12 11 10 9 8 - - - - 3 2 -	SALEABLE		345650003
MX123 CONN ASSY 73 CKT BLK OPT0 KEY A/39	345664363	C-HSG-A0	G-CAP-0-P	TPA-A0	RS	LS	MAL	CPA	MSEAL	RSEAL	72 71 - - 68 67 66 65 64 - - - - 59 - - - - - - - - 50 - 48 47 46 45 - - - - 40 39 38 - - 35 - 33 - 31 30 - - - - 25 24 - 22 21 20 - - 17 - - 14 - - - - 9 - 7 6 5 4 - 2 1	SALEABLE		345650003
MX123 CONN ASSY 73 CKT BLK OPT0 KEY A/30	345664373	C-HSG-A0	G-CAP-0-P	TPA-A0	RS	LS	MAL	CPA	MSEAL	RSEAL	72 71 - - 68 67 66 65 64 - 62 61 60 59 - 57 - 55 - 53 - - 50 - 48 - 46 45 - - - - - 39 38 37 - 35 - 33 - 31 30 29 - 27 - 25 24 23 22 21 20 - - - - 15 14 13 - 11 - 9 8 7 6 5 4 - - -	SALEABLE		345650003
MX123 CONN ASSY 73 CKT BLK OPT0 KEY A/29	345664403	C-HSG-A0	G-CAP-0-P	TPA-A0	RS	LS	MAL	CPA	MSEAL	RSEAL	- - - - - - - - - - 62 - 60 - - - - 55 54 53 52 51 - - - - 46 45 44 43 42 - 40 39 - - - 35 - - - - - - - - 26 25 - - 22 21 - - - 17 - 15 14 - - - - - 8 7 - 5 - 3 2 1	SALEABLE		345650003
MX123 CONN ASSY 73 CKT GRY OPT0 KEY B/34	345664413	C-HSG-B0	G-CAP-0-P	TPA-B0	RS	LS	MAL	CPA	MSEAL	RSEAL	72 71 70 69 68 67 66 65 64 - 62 61 60 - - - - - 54 - 52 51 - - - 47 - 45 44 - 42 41 40 - - - - - - - 32 31 30 - 28 - 26 25 24 - - - 20 19 - 17 - - - 13 12 11 10 9 8 - - - - - 2 1	SALEABLE		345650003

molex

MX123 SEALED RCPT ASSY (73 Ckt)
BOM & PIN OUT SHEET

ASSEMBLY DESCRIPTION	ASSEMBLY PART NUMBER	CONNECTOR HOUSING	GROMMET CAP	TPA	RIGHT SLIDE	LEFT SLIDE	MATE ASSIST LEVER	CPA	MAT SEAL	RING SEAL	BLOCKED TERMINALS CAVITY WITH A NUMBER INDICATES BLOCKED TERMINAL POSITION CAVITY WITHOUT A NUMBER INDICATES OPEN TERMINAL POSITION	STATUS	COMMENTS	INTEGRAL COMPONENTS SOLD SEPARATELY DRESS COVER
MX123 CONN ASSY 73 CKT BLU OPT9 KEY C/42	345664423	C-HSG-C9	G-CAP-9-P	TPA-C9	RS	LS	MAL	CPA	MSEAL	RSEAL	- 71 - 69 - - - 65 64 - - 61 60 - 58 - 56 55 54 - - - 50 49 - - - 45 - 43 - 41 - - - - - 35 - - - - 31 - 29 28 - - - - 23 - - 20 19 18 17 - 16 - - 13 12 11 - - - 7 - - - 3 - 1	SALEABLE		345650003
MX123 CONN ASSY 73 CKT BLK OPT9 KEY A/40	345664433	C-HSG-A9	G-CAP-9-P	TPA-A9	RS	LS	MAL	CPA	MSEAL	RSEAL	72 71 - - 68 67 66 65 64 - - - - 59 - - - - - - - - - - 48 47 46 45 - - - - 39 38 - - 35 - 33 - 31 30 - - - - 25 24 23 22 21 20 - - 17 - - - - - - - 9 8 7 6 5 4 - 2 1	SALEABLE		345650003
MX123 CONN ASSY 73 CKT BLK OPT9 KEY A/32	345664443	C-HSG-A9	G-CAP-9-P	TPA-A9	RS	LS	MAL	CPA	MSEAL	RSEAL	72 71 70 69 68 - - 65 64 63 62 61 60 59 58 57 56 55 54 53 52 51 50 49 - - 46 45 44 43 42 - 40 39 38 37 36 35 34 33 - - - - 28 - - - 24 23 - - 20 - - - - - - - 12 - - - - - - - - - 2 -	SALEABLE		345650003
MX123 CONN ASSY 73 CKT BLK OPT0 KEY A/45	345664453	C-HSG-A0	G-CAP-0-P	TPA-A0	RS	LS	MAL	CPA	MSEAL	RSEAL	- - - - - 67 66 - - - - - - - - - - - - - - - - - 47 - - - - - 41 - - - - - - - - 32 31 30 29 - 27 26 25 - - 22 21 - 19 18 17 16 15 14 13 - - 10 9 8 7 6 5 4 3 - -	SALEABLE		345650003
MX123 CONN ASSY 73 CKT GRY OPT9 KEY B/18	345664463	C-HSG-B9	G-CAP-9-P	TPA-B9	RS	LS	MAL	CPA	MSEAL	RSEAL	72 71 70 69 68 67 66 65 64 - 62 61 60 59 58 57 56 55 54 - 52 51 50 49 - - 46 - 44 - - 41 40 - 38 37 36 - - - 32 31 30 29 28 27 - 25 24 - - 21 20 - 18 17 16 15 14 13 12 - 10 9 8 7 6 5 4 3 2 -	SALEABLE		345650003
MX123 CONN ASSY 73 CKT GRY OPT0 KEY B/21	345664473	C-HSG-B0	G-CAP-0-P	TPA-B0	RS	LS	MAL	CPA	MSEAL	RSEAL	72 71 70 69 68 67 66 65 - - - 61 60 - - 57 56 55 54 - 52 51 50 49 48 - 46 - 44 - - 41 40 - 38 37 36 - - - 32 31 30 29 28 27 - - 24 - - 21 20 19 18 17 16 15 14 13 12 11 10 9 8 7 6 5 4 - 2 -	SALEABLE		345650003
MX123 CONN ASSY 73 CKT BLU OPT9 KEY C/54	345664483	C-HSG-C9	G-CAP-9-P	TPA-C9	RS	LS	MAL	CPA	MSEAL	RSEAL	- 71 - 69 - - - 65 64 - - 61 60 - - - - - 54 - - - 50 - - - - 45 - 43 42 41 - - - - - 35 - - - 31 - 29 28 - - - - - - - - - - - - 16 - - - 12 11 - - - - - - - - - -	SALEABLE		345650003
MX123 CONN ASSY 73 CKT BLK OPT9 KEY A/58	345664493	C-HSG-A9	G-CAP-9-P	TPA-A9	RS	LS	MAL	CPA	MSEAL	RSEAL	- - - - 68 - 66 65 - - - - - - - - - - - - - - - - - - 46 - - - - - - - 38 - - 35 - 33 - 31 - - - - - 25 - - 22 - 20 - - - - - - - - - - 9 - 7 6 - 4 - - -	SALEABLE		345650003
MX123 CONN ASSY 73 CKT GRY OPT9 KEY B/56	345664513	C-HSG-B9	G-CAP-9-P	TPA-B9	RS	LS	MAL	CPA	MSEAL	RSEAL	- - - 69 - - - 65 64 63 - - - - - - - - - - - - - 49 - - - 45 44 43 - 22 21 20 - - - - - - - 12 11 - 9 - - 6 5 4 - - -	SALEABLE		345650003
MX123 CONN ASSY 73 CKT BLK OPT0 KEY A/38	345664533	C-HSG-A0	G-CAP-0-P	TPA-A0	RS	LS	MAL	CPA	MSEAL	RSEAL	- 71 70 - 68 - 66 - 64 - 62 61 - 59 58 - - 55 54 - 52 51 50 - 48 - 46 45 - - 42 41 - 39 38 - - - 34 - 32 - - - - 27 26 25 - 23 22 - - 19 18 - - - - - 12 - - 9 8 7 6 - - - - -	SALEABLE		345650003
MX123 CONN ASSY 73 CKT GRY OPT0 KEY B/27	345664543	C-HSG-B0	G-CAP-0-P	TPA-B0	RS	LS	MAL	CPA	MSEAL	RSEAL	72 71 70 69 - - 66 65 - - 62 61 60 59 - - 56 - 54 - 52 51 50 49 48 47 - - 44 - 42 41 40 39 - - 36 - 34 33 - 31 - - - - 26 25 24 23 - - 20 - 18 - 16 15 14 13 - 11 - 9 8 7 6 5 4 3 2 -	SALEABLE		345650003
MX123 CONN ASSY 73 CKT GRY OPT0 KEY B/23	345664553	C-HSG-B0	G-CAP-0-P	TPA-B0	RS	LS	MAL	CPA	MSEAL	RSEAL	72 71 70 69 - - 66 65 - - 62 61 60 59 - - 56 55 54 - 52 51 50 49 48 47 - - 44 - 42 41 40 39 - - 36 35 34 33 - 31 - - - - 26 25 24 23 - - 20 19 18 - 16 15 14 13 - 11 - 9 8 7 6 5 4 3 2 1	SALEABLE		345650003

molex

MX123 SEALED RCPT ASSY (73 Ckt)
BOM & PIN OUT SHEET

ASSEMBLY DESCRIPTION	ASSEMBLY PART NUMBER	CONNECTOR HOUSING	GROMMET CAP	TPA	RIGHT SLIDE	LEFT SLIDE	MATE ASSIST LEVER	CPA	MAT SEAL	RING SEAL	BLOCKED TERMINALS CAVITY WITH A NUMBER INDICATES BLOCKED TERMINAL POSITION CAVITY WITHOUT A NUMBER INDICATES OPEN TERMINAL POSITION	STATUS	COMMENTS	INTEGRAL COMPONENTS SOLD SEPARATELY DRESS COVER
MX123 CONN ASSY 73 CKT GRY OPT0 KEY B/24	345664563	C-HSG-B0	G-CAP-0-P	TPA-B0	RS	LS	MAL	CPA	MSEAL	RSEAL	72 71 70 69 - - 66 65 - - 62 61 60 59 - 57 56 - 54 - 52 51 50 49 48 47 - - 44 - 42 41 40 39 - 37 36 - 34 33 - - 31 - - - - 26 25 24 23 - 21 20 - 18 - 16 15 14 13 - 11 - 9 8 7 6 5 4 3 2 -	SALEABLE		345650003
MX123 CONN ASSY 73 CKT GRY OPT0 KEY B/20	345664573	C-HSG-B0	G-CAP-0-P	TPA-B0	RS	LS	MAL	CPA	MSEAL	RSEAL	72 71 70 69 - - 66 65 - - 62 61 60 59 - 57 56 55 54 - 52 51 50 49 48 47 - - 44 - 42 41 40 39 - 37 36 35 34 33 - - 31 - - - - 26 25 24 23 - 21 20 19 18 - 16 15 14 13 - 11 - 9 8 7 6 5 4 3 2 1	SALEABLE		345650003
MX123 CONN ASSY 73 CKT GRY OPT0 KEY B/19	345664583	C-HSG-B0	G-CAP-0-P	TPA-B0	RS	LS	MAL	CPA	MSEAL	RSEAL	72 71 70 69 - - 66 65 - 63 62 61 60 59 - 57 56 55 54 - 52 51 50 49 48 47 - - 44 43 42 41 40 39 - 37 36 35 34 33 - - 31 - - - - 26 25 24 23 - 21 20 19 18 - 16 15 14 13 - 11 - 9 8 7 6 5 4 3 2 -	SALEABLE		345650003
MX123 CONN ASSY 73 CKT GRY OPT0 KEY B/18	345664593	C-HSG-B0	G-CAP-0-P	TPA-B0	RS	LS	MAL	CPA	MSEAL	RSEAL	72 71 70 69 - - 66 65 - 63 62 61 60 59 - 57 56 55 54 - 52 51 50 49 48 47 - - 44 43 42 41 40 39 - 37 36 35 34 33 - - 31 - - - - 26 25 24 23 - 21 20 19 18 - 16 15 14 13 - 11 - 9 8 7 6 5 4 3 2 1	SALEABLE		345650003
MX123 CONN ASSY 73 CKT BLK OPT0 KEY A/42	345664613	C-HSG-A0	G-CAP-0-P	TPA-A0	RS	LS	MAL	CPA	MSEAL	RSEAL	- 71 70 - 68 - - - 64 - 62 61 - 59 58 - - 55 54 - 52 51 50 - 48 - 46 45 - - - 41 - 39 38 - - - 34 - - - 32 - - - - - - 25 - 23 22 - - 19 18 - - - - - 12 - - 9 8 7 6 - - - - -	SALEABLE		345650003
MX123 CONN ASSY 73 CKT GRY OPT0 KEY B/36	345664623	C-HSG-B0	G-CAP-0-P	TPA-B0	RS	LS	MAL	CPA	MSEAL	RSEAL	- 71 - 69 - 67 - 65 64 63 62 61 - - 58 57 56 - - - - 51 - 49 - 47 - 45 44 43 42 41 - - 38 37 36 - - - - - - - - - - - - - 22 21 20 19 18 - - 15 14 13 12 11 - 9 - - 6 5 4 3 - -	SALEABLE		345650003
MX123 CONN ASSY 73 CKT BLK OPT0 KEY A/39	345664633	C-HSG-A0	G-CAP-0-P	TPA-A0	RS	LS	MAL	CPA	MSEAL	RSEAL	72 - - - 68 67 66 65 - - 62 61 - - - 57 - - - - - - 50 - 48 - 46 - - - - - 40 39 - 37 - 35 - 33 - 31 - 29 - 27 - 25 24 23 22 - 20 - - 17 - - 14 13 - 11 - 9 - 7 6 - 4 - 2 1	SALEABLE		345650003
MX123 CONN ASSY 73 CKT GRY OPT0 KEY B/38	345664643	C-HSG-B0	G-CAP-0-P	TPA-B0	RS	LS	MAL	CPA	MSEAL	RSEAL	- 71 - 69 - 67 - 65 64 63 62 61 - - 58 57 56 - - - - 51 - 49 - 47 - 45 44 43 42 41 - - 38 37 36 - - - - - - - - - - - - - 22 21 20 - - - - 15 14 13 12 11 - 9 - - 6 5 4 3 - -	SALEABLE		345650003
MX123 CONN ASSY 73 CKT BLK OPT0 KEY A/37	345664653	C-HSG-A0	G-CAP-0-P	TPA-A0	RS	LS	MAL	CPA	MSEAL	RSEAL	72 - - - 68 - 66 65 - - 62 61 - - 58 57 - - - - - - 50 - 48 - 46 - - - - - 40 39 - 37 - 35 - 33 - 31 - 29 - 27 - 25 24 - 22 21 20 - - 17 - - 14 13 - 11 - 9 8 7 6 5 4 - 2 1	SALEABLE		345650003
MX123 CONN ASSY 73 CKT BLK OPT0 KEY A/36	345664663	C-HSG-A0	G-CAP-0-P	TPA-A0	RS	LS	MAL	CPA	MSEAL	RSEAL	72 - - - 68 67 66 65 - - 62 61 - - - 57 - - - - - - 50 - 48 - 46 - - - - - 40 39 - 37 - 35 - 33 - 31 - 29 - 27 - 25 24 23 22 21 20 - - 17 - - 14 13 - 11 - 9 8 7 6 5 4 - 2 1	SALEABLE		345650003
MX123 CONN ASSY 73 CKT BLK OPT0 KEY A/29	345664673	C-HSG-A0	G-CAP-0-P	TPA-A0	RS	LS	MAL	CPA	MSEAL	RSEAL	72 71 70 69 68 - - 65 64 63 62 61 60 59 58 57 56 55 54 53 52 51 50 49 48 - 46 45 44 43 42 - 40 39 38 37 36 35 34 33 - - - - 28 - - - 24 23 - - 20 - - - - - - - 12 11 - - - - - - - - 2 1	SALEABLE		345650003
MX123 CONN ASSY 73 CKT GRY OPT9 KEY B/56	345664683	C-HSG-B9	G-CAP-9-P	TPA-B9	RS	LS	MAL	CPA	MSEAL	RSEAL	- - - - - - - - 63 - - - - - - - - - 53 - - - - 48 47 - 45 - 43 42 - - 39 - - - 35 34 33 - - - - - - 26 - - 23 22 - - 19 - - - - - - - 11 - - - - - - - - - 1	SALEABLE		345650003

molex

MX123 SEALED RCPT ASSY (73 Ckt)
BOM & PIN OUT SHEET

ASSEMBLY DESCRIPTION	ASSEMBLY PART NUMBER	CONNECTOR HOUSING	GROMMET CAP	TPA	RIGHT SLIDE	LEFT SLIDE	MATE ASSIST LEVER	CPA	MAT SEAL	RING SEAL	BLOCKED TERMINALS CAVITY WITH A NUMBER INDICATES BLOCKED TERMINAL POSITION CAVITY WITHOUT A NUMBER INDICATES OPEN TERMINAL POSITION	STATUS	COMMENTS	INTEGRAL COMPONENTS SOLD SEPARATELY DRESS COVER
MX123 CONN ASSY 73 CKT GRY OPT0 KEY B/53	345664693	C-HSG-B0	G-CAP-0-P	TPA-B0	RS	LS	MAL	CPA	MSEAL	RSEAL	- - - - - - - - 64 63 62 - - 59 58 - - - - 53 - - - - - 47 - 45 - 43 42 - - 39 - - - 35 34 33 - - - - - - - - - - 26 25 - 23 22 - 3 - 1	SALEABLE		345650003
MX123 CONN ASSY 73 CKT GRY OPT0 KEY B/48	345664703	C-HSG-B0	G-CAP-0-P	TPA-B0	RS	LS	MAL	CPA	MSEAL	RSEAL	72 71 70 69 68 - - - - 63 62 61 60 - - - 56 - 54 - 52 51 50 - - - 46 45 - 43 42 41 40 - - - 36 - 34 - - - - - 32 31 30 - 28 27 26 25 24 - - - 20 19 18 17 - - - - 16 15 14 13 - 11 10 - 8 - 6 5 4 3 2 1	SALEABLE		345650003
MX123 CONN ASSY 73 CKT BLK OPT0 KEY A/37	345664713	C-HSG-A0	G-CAP-0-P	TPA-A0	RS	LS	MAL	CPA	MSEAL	RSEAL	- - - - 68 - 66 65 - - 62 61 - - 58 57 - - - - - - 50 - 48 - 46 - - - - - 40 39 38 37 - 35 - 33 - - - - - 31 - 29 - 27 - 25 24 - 22 21 20 - - 17 - - - - - - 14 13 - 11 - 9 8 7 6 5 4 - 2 1	SALEABLE		345650003
MX123 CONN ASSY 73 CKT BLK OPT0 KEY A/36	345664723	C-HSG-A0	G-CAP-0-P	TPA-A0	RS	LS	MAL	CPA	MSEAL	RSEAL	- - - - 68 67 66 65 - - 62 61 - - - 57 - - - - - - 50 - 48 - 46 - - - - - 40 39 38 37 - 35 - 33 - - - - - 31 - 29 - 27 - 25 24 23 22 21 20 - - 17 - - - - - - 14 13 - 11 - 9 8 7 6 5 4 - 2 1	SALEABLE		345650003
MX123 CONN ASSY 73 CKT BLK OPT0 KEY A/39	345664733	C-HSG-A0	G-CAP-0-P	TPA-A0	RS	LS	MAL	CPA	MSEAL	RSEAL	- - - - 68 67 66 65 - - 62 61 - - - 57 - - - - - - 50 - 48 - 46 - - - - - 40 39 38 37 - 35 - 33 - - - - - 31 - 29 - 27 - 25 24 23 22 - 20 - - 17 - - - - - - 14 13 - 11 - 9 - 7 6 - 4 - 2 1	SALEABLE		345650003
MX123 CONN ASSY 73 CKT BLK OPT9 KEY A/59	345664743	C-HSG-A9	G-CAP-9-P	TPA-A9	RS	LS	MAL	CPA	MSEAL	RSEAL	- - - - 68 - 66 - - - - - - - - - - - - - - - - - - - 46 - - - - - - - 38 - - 35 - 33 - - - - - 31 - - - - - 25 - - 22 - 20 - - - - - - - - - - - - - - 9 - 7 6 - 4 - - -	SALEABLE		345650003
MX123 CONN ASSY 73 CKT GRY OPT0 KEY B/20	345664753	C-HSG-B0	G-CAP-0-P	TPA-B0	RS	LS	MAL	CPA	MSEAL	RSEAL	72 71 70 69 - - 66 65 - 63 62 61 60 59 - 57 56 55 54 53 52 51 50 49 48 47 - - 44 43 42 41 40 39 - 37 36 35 34 33 - - - - - 31 - - - - 26 25 24 23 - 21 20 19 18 - - - - - 16 - 14 - 12 11 - 9 8 7 - 5 4 3 2 -	SALEABLE		345650003
MX123 CONN ASSY 73 CKT GRY OPT0 KEY B/16	345664763	C-HSG-B0	G-CAP-0-P	TPA-B0	RS	LS	MAL	CPA	MSEAL	RSEAL	72 71 70 69 - - 66 65 - 63 62 61 60 59 58 57 56 55 54 53 52 51 50 49 48 47 - - 44 43 42 41 40 39 38 37 36 35 34 33 - - - - - 31 - - - - 26 25 24 23 22 21 20 19 18 - - - - - 16 - 14 - 12 11 - 9 8 7 - 5 4 3 2 1	SALEABLE		345650003
MX123 CONN ASSY 73 CKT GRY OPT0 KEY B/25	345664773	C-HSG-B0	G-CAP-0-P	TPA-B0	RS	LS	MAL	CPA	MSEAL	RSEAL	72 71 70 69 - - 66 65 - 63 62 61 60 - - 57 56 55 - 53 52 51 50 49 48 47 - - 44 43 42 41 40 - - 37 36 35 34 33 - - - - - 31 - - - - 26 25 24 - - 21 20 19 18 - - - - - 16 - 14 - 12 11 - 9 - 7 - 5 4 3 2 -	SALEABLE		345650003
MX123 CONN ASSY 73 CKT GRY OPT0 KEY B/25	345664783	C-HSG-B0	G-CAP-0-P	TPA-B0	RS	LS	MAL	CPA	MSEAL	RSEAL	72 71 70 69 - - 66 65 - - 62 61 60 59 - 57 56 - 54 53 52 51 50 49 48 47 - - 44 - 42 41 40 39 - 37 36 - 34 33 - - - - - 31 - - - - 26 25 24 23 - 21 20 - 18 - - - - - 16 - 14 - 12 11 - 9 8 7 - 5 4 3 2 -	SALEABLE		345650003
MX123 CONN ASSY 73 CKT GRY OPT0 KEY B/21	345664793	C-HSG-B0	G-CAP-0-P	TPA-B0	RS	LS	MAL	CPA	MSEAL	RSEAL	72 71 70 69 - - 66 65 - - 62 61 60 59 - 57 56 55 54 53 52 51 50 49 48 47 - - 44 - 42 41 40 39 - 37 36 35 34 33 - - - - - 31 - - - - 26 25 24 23 - 21 20 19 18 - - - - - 16 - 14 - 12 11 - 9 8 7 - 5 4 3 2 1	SALEABLE		345650003
MX123 CONN ASSY 73 CKT BLK OPT0 KEY A/38	345664803	C-HSG-A0	G-CAP-0-P	TPA-A0	RS	LS	MAL	CPA	MSEAL	RSEAL	- - 70 - - - - 65 - - - - 60 - 58 57 56 55 54 - 52 51 50 49 - 47 46 45 - 43 - - 40 - 38 37 36 - 34 - - - - - - 31 30 - 28 - 26 - 24 - 22 21 20 19 18 - - - - - 16 15 14 - - - 10 - - 7 6 - - - - -	SALEABLE		345650003

molex

MX123 SEALED RCPT ASSY (73 Ckt)
BOM & PIN OUT SHEET

ASSEMBLY DESCRIPTION	ASSEMBLY PART NUMBER	CONNECTOR HOUSING	GROMMET CAP	TPA	RIGHT SLIDE	LEFT SLIDE	MATE ASSIST LEVER	CPA	MAT SEAL	RING SEAL	BLOCKED TERMINALS CAVITY WITH A NUMBER INDICATES BLOCKED TERMINAL POSITION CAVITY WITHOUT A NUMBER INDICATES OPEN TERMINAL POSITION	STATUS	COMMENTS	INTEGRAL COMPONENTS SOLD SEPARATELY DRESS COVER
MX123 CONN ASSY 73 CKT GRY OPT9 KEY B/26	345664813	C-HSG-B9	G-CAP-9-P	TPA-B9	RS	LS	MAL	CPA	MSEAL	RSEAL	72 71 70 69 - - 66 65 - 63 62 61 60 - - 57 56 55 - 53 52 51 50 49 48 47 - - 44 43 42 41 40 - - 37 36 35 34 33 - - 31 - - - - 26 25 24 - - 21 20 19 18 - 16 - 14 - 12 11 - - - 7 - 5 4 3 2 -	SALEABLE		345650003
MX123 CONN ASSY 73 CKT BLU OPT0 KEY C/46	345664823	C-HSG-C0	G-CAP-0-P	TPA-C0	RS	LS	MAL	CPA	MSEAL	RSEAL	72 71 70 69 - - - - - 63 62 61 60 - - - 56 - - - 52 - - - - 47 - - 44 - - - - - - - 36 - 34 - - - - 29 28 27 - 25 - - - 21 - 19 18 17 - 15 14 - 12 11 - - - - - - - - - - 1	SALEABLE		345650003
MX123 CONN ASSY 73 CKT BLU OPT0 KEY C/41	345664833	C-HSG-C0	G-CAP-0-P	TPA-C0	RS	LS	MAL	CPA	MSEAL	RSEAL	- 71 - 69 - - - 65 64 - - 61 60 - 58 - 56 55 54 - - - 50 49 - - - 45 - 43 - 41 - - 38 - - 35 - - - 31 - 29 28 - - - - 23 - - 20 19 18 17 16 - - 13 12 11 - - - 7 - - - 3 - 1	SALEABLE		345650003
MX123 CONN ASSY 73 CKT BLU OPT0 KEY C/42	345664843	C-HSG-C0	G-CAP-0-P	TPA-C0	RS	LS	MAL	CPA	MSEAL	RSEAL	- 71 - 69 - - - 65 64 - - 61 60 - 58 - 56 55 54 - - - 50 49 - - - 45 - 43 - 41 - - - - - 35 - - - 31 - 29 28 - - - - 23 - - 20 19 18 17 16 - - 13 12 11 - - - 7 - - - 3 - 1	SALEABLE		345650003
MX123 CONN ASSY 73 CKT BLU OPT0 KEY C/45	345664853	C-HSG-C0	G-CAP-0-P	TPA-C0	RS	LS	MAL	CPA	MSEAL	RSEAL	- 71 - 69 - 67 - 65 64 - - 61 60 - 58 - - - 54 - - - 50 49 - - - 45 - 43 - 41 - - 38 - - 35 - - - 31 - 29 28 - - - - 23 - - 20 - - 17 16 - - 13 12 11 - - - 7 - - - - - 1	SALEABLE		345650003
MX123 CONN ASSY 73 CKT BLU OPT0 KEY C/41	345664863	C-HSG-C0	G-CAP-0-P	TPA-C0	RS	LS	MAL	CPA	MSEAL	RSEAL	- 71 - 69 - 67 - 65 64 - - 61 60 - 58 - 56 55 54 - - - 50 49 - - - 45 - 43 - 41 - - - - - 35 - - - 31 - 29 28 - - - - 23 - - 20 19 18 17 16 - - 13 12 11 - - - 7 - - - 3 - 1	SALEABLE		345650003
MX123 CONN ASSY 73 CKT BLU OPT0 KEY C/40	345664873	C-HSG-C0	G-CAP-0-P	TPA-C0	RS	LS	MAL	CPA	MSEAL	RSEAL	- 71 - 69 - 67 - 65 64 - - 61 60 - 58 - 56 55 54 - - - 50 49 - - - 45 - 43 - 41 - - 38 - - 35 - - - 31 - 29 28 - - - - 23 - - 20 19 18 17 16 - - 13 12 11 - - - 7 - - - 3 - 1	SALEABLE		345650003
MX123 CONN ASSY 73 CKT BLK OPT9 KEY A/39	345664883	C-HSG-A9	G-CAP-9-P	TPA-A9	RS	LS	MAL	CPA	MSEAL	RSEAL	- 71 70 - 68 - 66 - 64 - 62 61 - 59 58 - - 55 54 - 52 51 50 - 48 - - 45 - - 42 41 - 39 38 - - - 34 - 32 - - - - 27 26 25 - 23 22 - - 19 18 - - - - - 12 - - 9 8 7 6 - - - - -	SALEABLE		345650003
MX123 CONN ASSY 73 CKT GRY OPT9 KEY B/24	345664893	C-HSG-B9	G-CAP-9-P	TPA-B9	RS	LS	MAL	CPA	MSEAL	RSEAL	72 71 70 69 - - 66 65 - - 62 61 60 59 - 57 56 - 54 53 52 51 50 49 48 47 - - 44 - 42 41 40 39 - 37 36 - 34 33 - 31 - - - - 26 25 24 23 - 21 20 - 18 - 16 - 14 - 12 11 - 9 8 7 6 5 4 3 2 -	SALEABLE		345650003
MX123 CONN ASSY 73 CKT BLK OPT0 KEY A/21	345664903	C-HSG-A0	G-CAP-0-P	TPA-A0	RS	LS	MAL	CPA	MSEAL	RSEAL	- - - - - 67 - - - - - - 60 - - - - - 54 53 - - - - 48 - 46 45 - - 42 - 40 39 - - - - - - - - - - - - 26 25 - - 22 21 - - - - - - - - - - - - 8 7 6 5 4 3 - -	SALEABLE		345650003
MX123 CONN ASSY 73 CKT GRY OPT9 KEY B/27	345664913	C-HSG-B9	G-CAP-9-P	TPA-B9	RS	LS	MAL	CPA	MSEAL	RSEAL	72 71 70 69 - - 66 65 - - 62 61 60 59 - - 56 - 54 - 52 51 50 49 48 47 - - 44 - 42 41 40 39 - - 36 - 34 33 - 31 - - - - 26 25 24 23 - - 20 - 18 - 16 15 14 13 - 11 - 9 8 7 6 5 4 3 2 -	SALEABLE		345650003
MX123 CONN ASSY 73 CKT BLK OPT9 KEY A/38	345664923	C-HSG-A9	G-CAP-9-P	TPA-A9	RS	LS	MAL	CPA	MSEAL	RSEAL	- 71 70 - 68 - 66 - 64 - 62 61 - 59 58 - - 55 54 - 52 51 50 - 48 - 46 45 - - 42 41 - 39 38 - - - 34 - 32 - - - - 27 26 25 - 23 22 - - 19 18 - - - - - 12 - - 9 8 7 6 - - - - -	SALEABLE		345650003

molex

MX123 SEALED RCPT ASSY (73 Ckt)
BOM & PIN OUT SHEET

ASSEMBLY DESCRIPTION	ASSEMBLY PART NUMBER	CONNECTOR HOUSING	GROMMET CAP	TPA	RIGHT SLIDE	LEFT SLIDE	MATE ASSIST LEVER	CPA	MAT SEAL	RING SEAL	BLOCKED TERMINALS CAVITY WITH A NUMBER INDICATES BLOCKED TERMINAL POSITION CAVITY WITHOUT A NUMBER INDICATES OPEN TERMINAL POSITION	STATUS	COMMENTS	INTEGRAL COMPONENTS SOLD SEPARATELY DRESS COVER
MX123 CONN ASSY 73 CKT BLU OPT0 KEY C/41	345664933	C-HSG-C0	G-CAP-0-P	TPA-C0	RS	LS	MAL	CPA	MSEAL	RSEAL	- 71 - 69 - - - 65 64 - - 61 60 - 58 - 56 55 54 - - - 50 49 - - - 45 - 43 42 41 - - 38 - - - - - - - 31 - 29 28 - - - - 23 - - 20 19 18 17 - 16 - - 13 12 11 - - - 7 - - - 3 - 1	SALEABLE		345650003
MX123 CONN ASSY 73 CKT BLK OPT0 KEY A/49	345664943	C-HSG-A0	G-CAP-0-P	TPA-A0	RS	LS	MAL	CPA	MSEAL	RSEAL	72 71 - - - - 66 65 64 - - - - - - - - - - - - - - - 48 47 46 45 - - - - 40 - - - - 35 - 33 - - - 30 - - - - - 24 - 22 21 20 - - 17 - - - - - - - - - 7 6 5 4 - 2 1	SALEABLE		345650003
MX123 CONN ASSY 73 CKT GRY OPT0 KEY B/51	345664953	C-HSG-B0	G-CAP-0-P	TPA-B0	RS	LS	MAL	CPA	MSEAL	RSEAL	- - - - - - - - - - 62 61 60 - 58 57 56 55 54 - - - - - - - - - - - 42 41 40 - 38 37 36 35 - - - - - - - - - - - - 22 21 20 - - - - - - - - - - - 9 - - 6 5 4 - - -	SALEABLE		345650003
MX123 CONN ASSY 73 CKT BLK OPT9 KEY A/43	345664963	C-HSG-A9	G-CAP-9-P	TPA-A9	RS	LS	MAL	CPA	MSEAL	RSEAL	- 71 70 - 68 - - - 64 - 62 61 - 59 58 - - 55 54 - 52 51 50 - 48 - - 45 - - - 41 - 39 38 - - - 34 - - 32 - - - - - 25 - 23 22 - - 19 18 - - - - - 12 - - 9 8 7 6 - - - - -	SALEABLE		345650003
MX123 CONN ASSY 73 CKT GRY OPT9 KEY B/27	345664973	C-HSG-B9	G-CAP-9-P	TPA-B9	RS	LS	MAL	CPA	MSEAL	RSEAL	72 71 70 69 - - 66 65 - 63 62 61 60 - - 57 56 55 - 53 52 51 50 49 48 47 - - - - 42 41 40 - - 37 36 35 34 33 - 31 - - - - 26 25 24 - - 21 20 19 18 - - 16 - 14 - - 11 - 9 8 7 - 5 4 3 2 -	SALEABLE		345650003
MX123 CONN ASSY 73 CKT GRY OPT0 KEY B/39	345664983	C-HSG-B0	G-CAP-0-P	TPA-B0	RS	LS	MAL	CPA	MSEAL	RSEAL	- 71 - 69 - 67 - 65 64 63 62 61 - - 58 57 56 - - - - 51 - 49 - 47 - 45 - 43 42 41 - - 38 37 36 - - - - - - - - - - - - - 22 21 20 - - - - 15 14 13 12 11 - 9 - - 6 5 4 3 - -	SALEABLE		345650003
MX123 CONN ASSY 73 CKT BLK OPT0 KEY A/36	345664993	C-HSG-A0	G-CAP-0-P	TPA-A0	RS	LS	MAL	CPA	MSEAL	RSEAL	- - - - 68 - 66 65 - - 62 61 - - 58 57 - - - - - - 50 - 48 - 46 - - - - - 40 39 38 37 - 35 - 33 - 31 - 29 - 27 - 25 24 23 22 21 20 - - 17 - - 14 13 - 11 - 9 8 7 6 5 4 - 2 1	SALEABLE		345650003
MX123 CONN ASSY 73 CKT GRY OPT9 KEY B/31	345665013	C-HSG-B9	G-CAP-9-P	TPA-B9	RS	LS	MAL	CPA	MSEAL	RSEAL	72 71 70 69 - - 66 65 - - 62 61 60 - - 57 56 - - 53 52 51 50 49 48 47 - - - - 42 41 40 - - 37 36 - 34 33 - 31 - - - - 26 25 24 - - 21 20 - 18 - 16 - 14 - - 11 - 9 8 7 - 5 4 3 2 -	SALEABLE		345650003
MX123 CONN ASSY 73 CKT BLU OPT0 KEY C/38	345665023	C-HSG-C0	G-CAP-0-P	TPA-C0	RS	LS	MAL	CPA	MSEAL	RSEAL	- 71 - 69 - - 66 65 64 - - 61 60 - 58 - 56 55 54 - - - 50 49 - - - 45 - 43 - 41 - - 38 - - 35 - - - 31 - 29 28 27 - - - 23 - - - 19 18 17 16 - - 13 12 11 10 9 - 7 - - - 3 - 1	SALEABLE		345650003
MX123 CONN ASSY 73 CKT BLK OPT0 KEY A/40	345665033	C-HSG-A0	G-CAP-0-P	TPA-A0	RS	LS	MAL	CPA	MSEAL	RSEAL	72 71 - - 68 67 66 65 64 - - - - 59 - - - - - - - - 50 - 48 47 46 45 - - - - 40 39 38 - - - - - - 31 30 - - - - - 24 23 22 21 20 - - 17 - - 14 - - - - 9 8 7 6 5 4 - 2 1	SALEABLE		345650003
MX123 CONN ASSY 73 CKT BLK OPT0 KEY A/2	345665043	C-HSG-A0	G-CAP-0-P	TPA-A0	RS	LS	MAL	CPA	MSEAL	RSEAL	72 71 70 69 68 67 66 65 64 63 62 61 60 59 58 57 56 55 54 53 52 51 50 49 48 47 46 45 44 43 42 41 40 39 38 37 36 35 34 33 - 32 - 30 29 28 27 26 25 24 23 22 21 20 19 18 17 16 15 14 13 12 11 10 9 8 7 6 5 4 3 2 1	SALEABLE		345650003
MX123 CONN ASSY 73 CKT GRY OPT0 KEY B/6	345665053	C-HSG-B0	G-CAP-0-P	TPA-B0	RS	LS	MAL	CPA	MSEAL	RSEAL	72 71 70 69 68 67 66 65 64 63 62 61 60 59 58 57 56 55 54 53 52 51 50 49 48 - 46 45 44 43 42 41 40 39 38 37 36 35 34 33 - 32 - 30 29 28 27 26 25 24 23 22 21 - 19 18 - 16 15 14 13 12 11 10 9 8 7 6 5 4 3 2 -	SALEABLE		345650003

molex

MX123 SEALED RCPT ASSY (73 Ckt)
BOM & PIN OUT SHEET

ASSEMBLY DESCRIPTION	ASSEMBLY PART NUMBER	CONNECTOR HOUSING	GROMMET CAP	TPA	RIGHT SLIDE	LEFT SLIDE	MATE ASSIST LEVER	CPA	MAT SEAL	RING SEAL	BLOCKED TERMINALS CAVITY WITH A NUMBER INDICATES BLOCKED TERMINAL POSITION CAVITY WITHOUT A NUMBER INDICATES OPEN TERMINAL POSITION	STATUS	COMMENTS	INTEGRAL COMPONENTS SOLD SEPARATELY DRESS COVER
MX123 CONN ASSY 73 CKT BLK OPT9 KEY A/62	345665073	C-HSG-A9	G-CAP-9-P	TPA-A9	RS	LS	MAL	CPA	MSEAL	RSEAL	- 35 - - - - - - - - - - - - - - 25 - - - - - - - 17 - 15 14 - - - - - - 7 6 5 4 3 2 -	SALEABLE		345650003
MX123 CONN ASSY 73 CKT BLK OPT9 KEY A/39	345665083	C-HSG-A9	G-CAP-9-P	TPA-A9	RS	LS	MAL	CPA	MSEAL	RSEAL	72 71 - - 68 67 66 65 64 - - - - 59 - - - - - - - - 50 - 48 47 46 45 - - - - 40 39 - - 36 35 - 33 - - 31 30 - - - - 25 24 - 22 21 20 - - 17 - - 14 - - - - 9 - 7 6 5 4 - 2 1	SALEABLE		345650003
MX123 CONN ASSY 73 CKT GRY OPT0 KEY B/57	345665093	C-HSG-B0	G-CAP-0-P	TPA-B0	RS	LS	MAL	CPA	MSEAL	RSEAL	- 32 31 30 - 28 - 26 25 24 - - - 20 19 - 17 - - - - 12 11 10 9 - - - - - - 2 1	SALEABLE		345650003
MX123 CONN ASSY 73 CKT GRY OPT0 KEY B/52	345665103	C-HSG-B0	G-CAP-0-P	TPA-B0	RS	LS	MAL	CPA	MSEAL	RSEAL	72 71 70 69 68 - - - 64 63 62 61 60 - 58 - 56 - 54 - 52 51 50 - - - - 45 - 43 42 41 40 - 38 - 36 - 34 - - 32 31 30 - - 27 26 25 24 - 22 - 20 19 18 17 16 15 14 13 12 11 10 9 8 - 6 5 4 3 2 1	SALEABLE		345650003
MX123 CONN ASSY 73 CKT BLK OPT0 KEY A/50	345665113	C-HSG-A0	G-CAP-0-P	TPA-A0	RS	LS	MAL	CPA	MSEAL	RSEAL	- - - - - - - 65 - - - 61 - - 58 57 56 - - - - 51 50 - - 47 46 45 - - - - - - 38 37 36 - - - - - 31 30 - 28 - 26 - - - 22 21 20 - - - - 15 14 - - - 10 - - - - - - - - -	SALEABLE		345650003
MX123 CONN ASSY 73 CKT BLU OPT9 KEY C/43	345665123	C-HSG-C9	G-CAP-9-P	TPA-C9	RS	LS	MAL	CPA	MSEAL	RSEAL	- 71 - 69 - - - 65 64 - - 61 60 - 58 - 56 55 54 - - - 50 49 - - - - - 43 42 41 - - - - - 35 - - - - 31 - 29 28 - - - - 23 - - - 19 18 17 16 - - 13 12 11 - - - 7 - - - 3 - 1	SALEABLE		345650003
MX123 CONN ASSY 73 CKT GRY OPT9 KEY B/50	345665133	C-HSG-B9	G-CAP-9-P	TPA-B9	RS	LS	MAL	CPA	MSEAL	RSEAL	- - - 69 - - - 65 64 63 - - - - - - - - - - - - - 49 - - - 45 44 43 - 22 21 20 19 18 17 - - - - 12 11 - - - 7 6 5 4 3 2 1	SALEABLE		345650003
MX123 CONN ASSY 73 CKT BLU OPT0 KEY C/41	345665143	C-HSG-C0	G-CAP-0-P	TPA-C0	RS	LS	MAL	CPA	MSEAL	RSEAL	- 71 - 69 - - - 65 64 - - 61 60 - 58 - 56 55 54 - - - 50 49 - - - 45 - 43 - 41 - - 38 - - 35 - - - - 31 - 29 28 27 - - - 23 - - - 19 18 17 16 - - 13 12 11 - - - 7 - - - 3 - 1	SALEABLE		345650003
MX123 CONN ASSY 73 CKT BLK OPT0 KEY A/41	345665153	C-HSG-A0	G-CAP-0-P	TPA-A0	RS	LS	MAL	CPA	MSEAL	RSEAL	72 71 - - 68 67 66 65 64 - - - - 59 - - - - - - - - 50 - 48 - 46 45 - - - - 40 39 38 - - - - - - - 31 30 - - - - - 24 23 22 21 20 - - 17 - - 14 - - - - 9 8 7 6 5 4 - 2 1	SALEABLE		345650003
MX123 CONN ASSY 73 CKT BLK OPT9 KEY A/37	345665163	C-HSG-A9	G-CAP-9-P	TPA-A9	RS	LS	MAL	CPA	MSEAL	RSEAL	- 71 70 - 68 - 66 - 64 - 62 61 - 59 58 - - 55 54 - 52 51 50 - 48 - 46 45 - - 42 41 - 39 38 - - - 34 - - 32 - - - - 27 26 25 - 23 22 - - 19 18 - - - - 13 12 - - 9 8 7 6 - - - - -	SALEABLE		345650003
MX123 CONN ASSY 73 CKT GRY OPT9 KEY B/23	345665173	C-HSG-B9	G-CAP-9-P	TPA-B9	RS	LS	MAL	CPA	MSEAL	RSEAL	72 71 70 69 - - 66 65 - - 62 61 60 - 58 - 56 55 54 53 52 51 50 49 48 47 - - 44 - 42 41 40 - 38 - 36 35 34 33 - - 31 - - - - 26 25 24 23 22 - 20 19 18 17 16 15 14 13 12 11 - 9 8 7 - - - - 2 1	SALEABLE		345650003
MX123 CONN ASSY 73 CKT GRY OPT0 KEY B/24	345665183	C-HSG-B0	G-CAP-0-P	TPA-B0	RS	LS	MAL	CPA	MSEAL	RSEAL	72 71 70 69 - - 66 65 - 63 62 61 60 - - 57 56 55 - 53 52 51 50 49 48 47 - - - 43 42 41 40 - - 37 36 35 34 33 - - 31 - - - - 26 25 24 - - 21 20 19 18 - 16 15 14 13 - 11 - 9 - 7 6 5 4 3 2 -	SALEABLE		345650003

molex

MX123 SEALED RCPT ASSY (73 Ckt)
BOM & PIN OUT SHEET

ASSEMBLY DESCRIPTION	ASSEMBLY PART NUMBER	CONNECTOR HOUSING	GROMMET CAP	TPA	RIGHT SLIDE	LEFT SLIDE	MATE ASSIST LEVER	CPA	MAT SEAL	RING SEAL	BLOCKED TERMINALS CAVITY WITH A NUMBER INDICATES BLOCKED TERMINAL POSITION CAVITY WITHOUT A NUMBER INDICATES OPEN TERMINAL POSITION	STATUS	COMMENTS	INTEGRAL COMPONENTS SOLD SEPARATELY DRESS COVER
MX123 CONN ASSY 73 CKT BLK OPT0 KEY A/40	345665193	C-HSG-A0	G-CAP-0-P	TPA-A0	RS	LS	MAL	CPA	MSEAL	RSEAL	72 71 - - 68 67 66 65 64 - - - - 59 - - - - - - - - 50 - 48 47 46 45 - - - - 40 39 38 - - 35 - 33 - - 31 30 - - - - 25 24 23 22 21 20 - - - - - 14 - - - - 9 8 7 6 5 4 - - -	SALEABLE		345650003
MX123 CONN ASSY 73 CKT BLK OPT0 KEY A/15	345665203	C-HSG-A0	G-CAP-0-P	TPA-A0	RS	LS	MAL	CPA	MSEAL	RSEAL	- - 70 - - - - 65 - - - 61 60 - - - - 55 - - - - - - - - - 45 - - - 41 40 - - - - - - - - - - - - - 28 - 26 25 - - - - - - 18 - 16 - - - - - 10 - - - - - - - - - -	SALEABLE		345650003
MX123 CONN ASSY 73 CKT BLK OPT0 KEY A/51	345665213	C-HSG-A0	G-CAP-0-P	TPA-A0	RS	LS	MAL	CPA	MSEAL	RSEAL	- - - - - - - - - - - 61 - - 58 57 56 - - - - 51 50 - - 47 46 45 - - - - - - 38 37 36 - - - - - 31 30 - 28 - 26 - - - 22 21 20 - - - - 15 14 - - - 10 - - - - - - - - -	SALEABLE		345650003
MX123 CONN ASSY 73 CKT BLU OPT0 KEY C/34	345665223	C-HSG-C0	G-CAP-0-P	TPA-C0	RS	LS	MAL	CPA	MSEAL	RSEAL	- 71 - 69 68 - - 65 64 - - 61 60 - 58 - 56 55 54 - - - 50 49 - 47 - 45 - 43 - 41 - - 38 37 36 35 - - - 31 - 29 28 - - - 24 23 - - 20 19 18 17 16 - - 13 12 11 - - 8 7 - - - 3 2 1	SALEABLE		345650003
MX123 CONN ASSY 73 CKT BLU OPT0 KEY C/41	345665233	C-HSG-C0	G-CAP-0-P	TPA-C0	RS	LS	MAL	CPA	MSEAL	RSEAL	- 71 - 69 - - - 65 64 - - 61 60 - 58 - - - 54 - - - 50 49 - - - 45 - 43 - 41 - - - 37 36 35 - - - 31 - 29 28 27 - - 24 23 - - 20 - - 17 16 - - 13 12 11 - - 8 7 - - - - 2 1	SALEABLE		345650003
MX123 CONN ASSY 73 CKT BLU OPT0 KEY C/60	345665243	C-HSG-C0	G-CAP-0-P	TPA-C0	RS	LS	MAL	CPA	MSEAL	RSEAL	- - - - - - - - 64 - - - 60 - - - - - - - 52 - - - - 47 - - - - - - - - - - 37 - - - - 32 - - - - - - - 24 23 - - - - - - - - - 13 12 11 10 - 8 - - - - - - -	SALEABLE		345650003
MX123 CONN ASSY 73 CKT GRY OPT0 KEY B/39	345665253	C-HSG-B0	G-CAP-0-P	TPA-B0	RS	LS	MAL	CPA	MSEAL	RSEAL	72 71 70 69 68 - - 65 64 - 62 61 60 - - - - - 54 - 52 51 - - - 47 - - 44 - 42 41 40 - - - - - - - 32 31 30 - 28 - 26 25 24 - - - 20 19 - 17 - - - - 12 11 10 9 - - - - - - 2 1	SALEABLE		345650003
MX123 CONN ASSY 73 CKT GRY OPT0 KEY B/50	345665263	C-HSG-B0	G-CAP-0-P	TPA-B0	RS	LS	MAL	CPA	MSEAL	RSEAL	- - - 69 - - - 65 64 63 - - - - - - - - - - - - - 49 - - - 45 44 43 - - - - - - - - - - - - - - - - 26 - - 23 22 21 20 19 18 - - - - - 12 11 - 9 - 7 6 5 4 3 - -	SALEABLE		345650003
MX123 CONN ASSY 73 CKT BLK OPT0 KEY A/40	345665273	C-HSG-A0	G-CAP-0-P	TPA-A0	RS	LS	MAL	CPA	MSEAL	RSEAL	72 71 - - 68 67 66 65 64 - - - - 59 - - - - - - - - 50 - 48 47 46 45 - - - - 40 39 38 - - 35 - 33 - 31 30 - - - - 25 24 - 22 21 20 - - 17 - - 14 - - - - - - 7 6 5 4 - 2 1	SALEABLE		345650003
MX123 CONN ASSY 73 CKT BLU OPT0 KEY C/41	345665283	C-HSG-C0	G-CAP-0-P	TPA-C0	RS	LS	MAL	CPA	MSEAL	RSEAL	- 71 - 69 - - - 65 64 - - 61 60 - 58 - - - - - - - 50 49 - - - 45 - 43 - 41 - - 38 37 36 35 - - - 31 - 29 28 27 - - 24 23 - - 20 - - 17 16 - - 13 12 11 - - 8 7 - - - 2 1	SALEABLE		345650003
MX123 CONN ASSY 73 CKT BLK OPT0 KEY A/41	345665293	C-HSG-A0	G-CAP-0-P	TPA-A0	RS	LS	MAL	CPA	MSEAL	RSEAL	72 71 - - 68 67 66 65 64 - - - - 59 - - - - - - - - 50 - 48 47 46 45 - - - - - 39 38 - - 35 - 33 - 31 30 - - - - 25 24 23 22 21 20 - - - - - 14 - - - - 9 8 7 6 5 4 - - -	SALEABLE		345650003
MX123 CONN ASSY 73 CKT GRY OPT0 KEY B/49	345665303	C-HSG-B0	G-CAP-0-P	TPA-B0	RS	LS	MAL	CPA	MSEAL	RSEAL	72 71 70 69 68 67 66 - - 63 62 61 60 - 58 - 56 - 54 - 52 51 - - - 47 - 45 44 43 42 41 40 - 38 - 36 - 34 - - 31 30 - 28 27 26 25 24 - 22 - 20 19 18 17 16 - 14 13 12 11 10 9 8 - - - - - 2 1	SALEABLE		345650003

molex

MX123 SEALED RCPT ASSY (73 Ckt)
BOM & PIN OUT SHEET

ASSEMBLY DESCRIPTION	ASSEMBLY PART NUMBER	CONNECTOR HOUSING	GROMMET CAP	TPA	RIGHT SLIDE	LEFT SLIDE	MATE ASSIST LEVER	CPA	MAT SEAL	RING SEAL	BLOCKED TERMINALS CAVITY WITH A NUMBER INDICATES BLOCKED TERMINAL POSITION CAVITY WITHOUT A NUMBER INDICATES OPEN TERMINAL POSITION	STATUS	COMMENTS	INTEGRAL COMPONENTS SOLD SEPARATELY DRESS COVER
MX123 CONN ASSY 73 CKT BLU OPT0 KEY C/47	345665313	C-HSG-C0	G-CAP-0-P	TPA-C0	RS	LS	MAL	CPA	MSEAL	RSEAL	- 71 - 69 - - - 65 64 - - 61 60 - 58 - - - 54 - - - 50 49 - - - 45 - 43 - 41 - - - - - 35 - - - - 31 - 29 28 - - - - 23 - - 20 - - 17 16 - - 13 12 11 - - - 7 - - - - - 1	SALEABLE		345650003
MX123 CONN ASSY 73 CKT BLK OPT0 KEY A/35	345665333	C-HSG-A0	G-CAP-0-P	TPA-A0	RS	LS	MAL	CPA	MSEAL	RSEAL	- - - 69 - - - - - - - 61 - - 58 57 - 55 54 - 52 - 50 - - - - - - - 42 - - 39 38 37 36 35 34 33 32 31 - - - 27 - - 23 22 21 - 19 18 - 16 15 14 13 - - 10 9 8 7 6 5 4 3 2 1	SALEABLE		345650003
MX123 CONN ASSY 73 CKT GRY OPT0 KEY B/24	345665343	C-HSG-B0	G-CAP-0-P	TPA-B0	RS	LS	MAL	CPA	MSEAL	RSEAL	72 71 70 69 - - 66 65 - 63 62 61 60 - - 57 56 55 - 53 52 51 50 49 48 47 - - 44 43 42 41 40 - - 37 36 35 34 33 - 31 - - - - 26 25 24 - - 21 20 19 18 - 16 15 14 13 - 11 - 9 - 7 - 5 4 3 2 -	SALEABLE		345650003
MX123 CONN ASSY 73 CKT GRY OPT9 KEY B/32	345665353	C-HSG-B9	G-CAP-9-P	TPA-B9	RS	LS	MAL	CPA	MSEAL	RSEAL	72 71 70 69 - - 66 65 - - 62 61 60 - - 57 56 - - 53 52 51 50 49 48 47 - - - - 42 41 40 - - 37 36 - - 33 - 31 - - - - 26 25 24 - - 21 20 - 18 - 16 - 14 - - 11 - 9 8 7 - 5 4 3 2 -	SALEABLE		345650003
MX123 CONN ASSY 73 CKT BLU OPT0 KEY C/35	345665363	C-HSG-C0	G-CAP-0-P	TPA-C0	RS	LS	MAL	CPA	MSEAL	RSEAL	- 71 - 69 - 67 - 65 64 - - 61 60 - 58 - 56 55 54 - - - 50 49 - - - 45 - 43 - 41 - - - 37 36 35 - - - 31 - 29 28 27 - - 24 23 - - 20 19 18 17 16 - - 13 12 11 - - 8 7 - - - 3 2 1	SALEABLE		345650003
MX123 CONN ASSY 73 CKT BLU OPT0 KEY C/32	345665373	C-HSG-C0	G-CAP-0-P	TPA-C0	RS	LS	MAL	CPA	MSEAL	RSEAL	- 71 - 69 - 67 - 65 64 - - 61 60 - 58 - 56 55 54 - - - 50 49 - - - 45 - 43 - 41 - - 38 37 36 35 - - - 31 - 29 28 27 - - 24 23 - - 20 19 18 17 16 - - 13 12 11 - - 8 7 - 5 4 3 2 1	SALEABLE		345650003
MX123 CONN ASSY 73 CKT BLU OPT0 KEY C/39	345665383	C-HSG-C0	G-CAP-0-P	TPA-C0	RS	LS	MAL	CPA	MSEAL	RSEAL	- 71 - 69 - 67 - 65 64 - - 61 60 - 58 - 56 55 54 - - - 50 49 - - - 45 - 43 - 41 - - 38 - - 35 - - - 31 - 29 28 27 - - - 23 - - 20 19 18 17 16 - - 13 12 11 - - - 7 - - - 3 - 1	SALEABLE		345650003
MX123 CONN ASSY 73 CKT BLK OPT0 KEY A/30	345665393	C-HSG-A0	G-CAP-0-P	TPA-A0	RS	LS	MAL	CPA	MSEAL	RSEAL	72 71 - - 68 67 66 65 64 - 62 61 60 59 58 57 - - - - - - 50 - 48 47 46 45 - - - - 40 39 38 37 - 35 - 33 - 31 30 29 - 27 - 25 24 - 22 - 20 - - 17 - 15 14 13 - 11 - 9 - 7 6 - 4 - 2 1	SALEABLE		345650003
MX123 CONN ASSY 73 CKT GRY OPT0 KEY B/42	345665403	C-HSG-B0	G-CAP-0-P	TPA-B0	RS	LS	MAL	CPA	MSEAL	RSEAL	72 71 70 69 68 67 66 - 64 63 62 61 60 - - - - - 54 - 52 51 - - - 47 - - 44 43 42 41 40 - - - 36 - - - 32 31 30 - 28 27 26 25 24 - - - 20 19 - 17 - - - 13 12 11 10 9 8 - - - - - 2 1	SALEABLE		345650003
MX123 CONN ASSY 73 CKT BLK OPT0 KEY A/31	345665413	C-HSG-A0	G-CAP-0-P	TPA-A0	RS	LS	MAL	CPA	MSEAL	RSEAL	72 71 - - 68 67 66 65 64 - 62 61 60 59 58 57 - - - - - - 50 - 48 47 46 45 - - - - 40 39 38 37 - 35 - 33 - 31 30 29 - 27 - 25 24 - 22 - 20 - - 17 - - 14 13 - 11 - 9 - 7 6 - 4 - 2 1	SALEABLE		345650003
MX123 CONN ASSY 73 CKT BLK OPT0 KEY A/27	345665423	C-HSG-A0	G-CAP-0-P	TPA-A0	RS	LS	MAL	CPA	MSEAL	RSEAL	72 71 - - 68 67 66 65 64 - 62 61 60 59 - 57 - - - - - - 50 - 48 47 46 45 - - - - 40 39 38 37 - 35 - 33 - 31 30 29 - 27 - 25 24 23 22 21 20 - - 17 - 15 14 13 - 11 - 9 8 7 6 5 4 - 2 1	SALEABLE		345650003
MX123 CONN ASSY 73 CKT GRY OPT9 KEY B/22	345665433	C-HSG-B9	G-CAP-9-P	TPA-B9	RS	LS	MAL	CPA	MSEAL	RSEAL	72 71 70 69 - - 66 65 - 63 62 61 60 - - 57 56 55 - 53 52 51 50 49 48 47 - - 44 43 42 41 40 - - 37 36 35 34 33 - 31 - - - - 26 25 24 - - 21 20 19 18 - 16 15 14 13 12 11 - 9 8 7 - 5 4 3 2 -	SALEABLE		345650003

molex

MX123 SEALED RCPT ASSY (73 Ckt)
BOM & PIN OUT SHEET

ASSEMBLY DESCRIPTION	ASSEMBLY PART NUMBER	CONNECTOR HOUSING	GROMMET CAP	TPA	RIGHT SLIDE	LEFT SLIDE	MATE ASSIST LEVER	CPA	MAT SEAL	RING SEAL	BLOCKED TERMINALS CAVITY WITH A NUMBER INDICATES BLOCKED TERMINAL POSITION CAVITY WITHOUT A NUMBER INDICATES OPEN TERMINAL POSITION	STATUS	COMMENTS	INTEGRAL COMPONENTS SOLD SEPARATELY DRESS COVER
MX123 CONN ASSY 73 CKT GRY OPT9 KEY B/24	345665443	C-HSG-B9	G-CAP-9-P	TPA-B9	RS	LS	MAL	CPA	MSEAL	RSEAL	72 71 70 69 - - 66 65 - 63 62 61 60 - - 57 56 55 - 53 52 51 50 49 48 47 - - 44 43 42 41 40 - - 37 36 35 34 33 - - 31 - - - - 26 25 24 - - 21 20 19 18 - 16 - 14 - 12 11 - 9 8 7 - 5 4 3 2 -	SALEABLE		345650003
MX123 CONN ASSY 73 CKT GRY OPT0 KEY B/24	345665453	C-HSG-B0	G-CAP-0-P	TPA-B0	RS	LS	MAL	CPA	MSEAL	RSEAL	72 71 70 69 - - 66 65 - 63 62 61 60 - - 57 56 55 - 53 52 51 50 49 48 47 - - 44 43 42 41 40 - - 37 36 35 34 33 - - 31 - - - - 26 25 24 - - 21 20 19 18 - 16 - 14 - 12 11 - 9 8 7 - 5 4 3 2 -	SALEABLE		345650003
MX123 CONN ASSY 73 CKT BLK OPT0 KEY A/21	345665463	C-HSG-A0	G-CAP-0-P	TPA-A0	RS	LS	MAL	CPA	MSEAL	RSEAL	- 71 - 69 68 67 66 65 64 - 62 61 60 59 58 57 56 55 54 53 - 51 50 - 48 47 46 45 44 43 42 - 40 39 38 37 36 35 34 33 32 - - 29 - - - 25 24 - 22 21 - - 18 17 - - - 13 - 11 - 9 8 7 - 5 4 3 2 1	SALEABLE		345650003
MX123 CONN ASSY 73 CKT BLK OPT0 KEY A/45	345665473	C-HSG-A0	G-CAP-0-P	TPA-A0	RS	LS	MAL	CPA	MSEAL	RSEAL	- - - 69 - - - - - - - 61 - - 58 57 - 55 54 - - - 50 49 - - - - - - - - - 39 38 37 36 35 34 33 32 - - - - - - - - - - 22 21 - - 18 - - - - 13 - - - 9 8 7 - 5 4 3 2 1	SALEABLE		345650003
MX123 CONN ASSY 73 CKT GRY OPT0 KEY B/39	345665483	C-HSG-B0	G-CAP-0-P	TPA-B0	RS	LS	MAL	CPA	MSEAL	RSEAL	- 71 - 69 - 67 - 65 - - 62 61 - - 58 57 56 - - - - 51 - 49 - 47 - 45 44 43 42 41 - - 38 37 36 - - - - - - - - - - - - 23 22 21 - 19 18 - - 15 14 13 12 11 - 9 - 7 6 - - 3 - -	SALEABLE		345650003
MX123 CONN ASSY 73 CKT BLK OPT0 KEY A/37	345665493	C-HSG-A0	G-CAP-0-P	TPA-A0	RS	LS	MAL	CPA	MSEAL	RSEAL	- 71 - - 68 67 66 65 64 - 62 61 - - - - - - - - - - 50 - 48 47 46 45 - - - - - 39 38 - - 35 - 33 - 31 30 29 - 27 - 25 24 23 22 21 20 - - - - - 14 13 - 11 - 9 8 7 6 5 4 - - -	SALEABLE		345650003
MX123 CONN ASSY 73 CKT BLK OPT0 KEY A/30	345665503	C-HSG-A0	G-CAP-0-P	TPA-A0	RS	LS	MAL	CPA	MSEAL	RSEAL	- - 70 - - - - 65 - - - 61 - - 58 57 56 55 54 53 - 51 50 - - 47 - 45 - - - 41 - - 38 37 36 - 34 - - 31 30 - 28 - - 25 - - 22 21 20 19 18 - 16 15 - - - - - - - - - - - - - -	SALEABLE		345650003
MX123 CONN ASSY 73 CKT GRY OPT9 KEY B/22	345665513	C-HSG-B9	G-CAP-9-P	TPA-B9	RS	LS	MAL	CPA	MSEAL	RSEAL	72 71 70 69 - - 66 65 - - 62 61 60 59 - 57 56 - 54 53 52 51 50 49 48 47 - - 44 - 42 41 40 39 - 37 36 - 34 33 - 31 - - - 26 25 24 23 - 21 20 - 18 - 16 15 14 13 12 11 - 9 8 7 6 5 4 3 2 -	SALEABLE		345650003
MX123 CONN ASSY 73 CKT BLK OPT9 KEY A/42	345665523	C-HSG-A9	G-CAP-9-P	TPA-A9	RS	LS	MAL	CPA	MSEAL	RSEAL	- 71 70 - 68 - - - 64 - 62 61 - 59 58 - - 55 54 - 52 51 50 - 48 - 46 45 - - - 41 - 39 38 - - - 34 - 32 - - - - - - 25 - 23 22 - - 19 18 - - - - - 12 - - 9 8 7 6 - - - - -	SALEABLE		345650003
MX123 CONN ASSY 73 CKT GRY OPT9 KEY B/24	345665533	C-HSG-B9	G-CAP-9-P	TPA-B9	RS	LS	MAL	CPA	MSEAL	RSEAL	72 71 70 69 - - 66 65 - 63 62 61 60 - - 57 56 55 - 53 52 51 50 49 48 47 - - 44 43 42 41 40 - - 37 36 35 34 33 - 31 - - - - 26 25 24 - - 21 20 19 18 - 16 15 14 13 12 11 - - - 7 - 5 4 3 2 -	SALEABLE		345650003
MX123 CONN ASSY 73 CKT BLK OPT9 KEY A/24	345665543	C-HSG-A9	G-CAP-9-P	TPA-A9	RS	LS	MAL	CPA	MSEAL	RSEAL	72 71 70 69 - - 66 65 - 63 62 61 60 - - 57 56 55 - 53 52 51 50 49 48 47 - - 44 43 42 41 40 - - 37 36 35 34 33 - 31 - - - - 26 25 24 - - 21 20 19 18 - 16 15 14 13 - 11 - 9 - 7 - 5 4 3 2 -	SALEABLE		345650003
MX123 CONN ASSY 73 CKT GRY OPT9 KEY B/24	345665553	C-HSG-B9	G-CAP-9-P	TPA-B9	RS	LS	MAL	CPA	MSEAL	RSEAL	72 71 70 69 - - 66 65 - 63 62 61 60 - - 57 56 55 - 53 52 51 50 49 48 47 - - 44 43 42 41 40 - - 37 36 35 34 33 - 31 - - - - 26 25 24 - - 21 20 19 18 - 16 15 14 13 - 11 - 9 - 7 - 5 4 3 2 -	SALEABLE		345650003

molex

MX123 SEALED RCPT ASSY (73 Ckt)
BOM & PIN OUT SHEET

ASSEMBLY DESCRIPTION	ASSEMBLY PART NUMBER	CONNECTOR HOUSING	GROMMET CAP	TPA	RIGHT SLIDE	LEFT SLIDE	MATE ASSIST LEVER	CPA	MAT SEAL	RING SEAL	BLOCKED TERMINALS CAVITY WITH A NUMBER INDICATES BLOCKED TERMINAL POSITION CAVITY WITHOUT A NUMBER INDICATES OPEN TERMINAL POSITION	STATUS	COMMENTS	INTEGRAL COMPONENTS SOLD SEPARATELY DRESS COVER
MX123 CONN ASSY 73 CKT BLK OPT0 KEY A/43	345665563	C-HSG-A0	G-CAP-0-P	TPA-A0	RS	LS	MAL	CPA	MSEAL	RSEAL	- - - - 68 67 66 65 - - 62 61 - - - - - - - - - - 50 - - - 46 - - - - - 40 39 38 - - 35 - - - - 31 - 29 - 27 - 25 24 23 22 21 20 - - - - - 14 13 - 11 - 9 8 7 6 5 4 - - -	SALEABLE		345650003
MX123 CONN ASSY 73 CKT BLU OPT0 KEY C/52	345665573	C-HSG-C0	G-CAP-0-P	TPA-C0	RS	LS	MAL	CPA	MSEAL	RSEAL	- 71 - 69 - 67 - 65 64 - - 61 60 - - - - - 54 - - - 50 - - - 45 - 43 - 41 - - - - - 35 - - - 31 - 29 28 27 - - - - - - - - - - - 16 - - - 12 11 - - - - - - - - 3 - -	SALEABLE		345650003
MX123 CONN ASSY 73 CKT GRY OPT0 KEY B/41	345665583	C-HSG-B0	G-CAP-0-P	TPA-B0	RS	LS	MAL	CPA	MSEAL	RSEAL	- 71 - 69 - 67 - 65 - - 62 61 - - 58 57 56 - - - - 51 - 49 - 47 - 45 44 43 42 41 - - 38 37 36 - - - - - - - - - - - - - 22 21 - 19 18 - - 15 14 13 12 11 - 9 - - 6 - - 3 - -	SALEABLE		345650003
MX123 CONN ASSY 73 CKT BLU OPT0 KEY C/37	345665593	C-HSG-C0	G-CAP-0-P	TPA-C0	RS	LS	MAL	CPA	MSEAL	RSEAL	- 71 - 69 - 67 - 65 64 - - 61 60 - 58 - 56 - 54 - - - 50 49 - - - 45 - 43 - 41 - - 38 37 36 35 - - - 31 - 29 28 27 - - 24 - - - 20 19 18 17 16 - - 13 12 11 - - 8 - - - - 3 2 1	SALEABLE		345650003
MX123 CONN ASSY 73 CKT BLK OPT0 KEY A/33	345665603	C-HSG-A0	G-CAP-0-P	TPA-A0	RS	LS	MAL	CPA	MSEAL	RSEAL	- - 70 - - - - 65 - - - 61 60 - 58 57 - 55 54 - 52 51 - 49 - 47 - 45 - - - 41 40 - 38 37 - - 34 - - 31 - - 28 - 26 25 24 - 22 21 - 19 18 - 16 15 - - - - 10 - - 7 6 - - - - -	SALEABLE		345650003
MX123 CONN ASSY 73 CKT BLU OPT0 KEY C/43	345665613	C-HSG-C0	G-CAP-0-P	TPA-C0	RS	LS	MAL	CPA	MSEAL	RSEAL	- 71 - 69 - 67 66 65 64 - - 61 60 - - - 56 55 54 - - - 50 49 - - 46 45 - 43 - 41 - - 38 - - 35 - - - 31 - 29 28 - - - - - - - - - 19 18 - 16 - - - 12 11 10 9 - - - - - 3 - -	SALEABLE		345650003
MX123 CONN ASSY 73 CKT BLU OPT0 KEY C/40	345665623	C-HSG-C0	G-CAP-0-P	TPA-C0	RS	LS	MAL	CPA	MSEAL	RSEAL	- 71 - 69 - 67 66 65 64 - - 61 60 - 58 - 56 55 54 - - - 50 49 - - 46 45 - 43 - 41 - - 38 - - 35 - - - 31 - 29 28 - - - - - - - - - 19 18 17 16 - - - 12 11 10 9 - - - - - 3 - - 1	SALEABLE		345650003
MX123 CONN ASSY 73 CKT GRY OPT0 KEY B/19	345665633	C-HSG-B0	G-CAP-0-P	TPA-B0	RS	LS	MAL	CPA	MSEAL	RSEAL	- 71 70 69 68 67 66 65 64 63 - - 60 59 58 57 56 55 54 53 - 51 50 49 - 47 - 45 - - 42 - - 39 38 37 36 35 34 33 32 31 - 29 28 27 26 25 24 23 22 21 - - - 17 - - - 13 12 11 10 9 8 7 6 5 - 3 2 1	SALEABLE		345650003
MX123 CONN ASSY 73 CKT GRY OPT0 KEY B/18	345665643	C-HSG-B0	G-CAP-0-P	TPA-B0	RS	LS	MAL	CPA	MSEAL	RSEAL	- 71 70 69 68 67 66 65 64 63 - - 60 59 58 57 56 55 54 53 - 51 50 49 - 47 - 45 44 - 42 - - 39 38 37 36 35 34 33 32 31 - 29 28 27 26 25 24 23 22 21 - - - 17 - - - 13 12 11 10 9 8 7 6 5 - 3 2 1	SALEABLE		345650003
MX123 CONN ASSY 73 CKT BLK OPT0 KEY A/52	345665653	C-HSG-A0	G-CAP-0-P	TPA-A0	RS	LS	MAL	CPA	MSEAL	RSEAL	- - - - - 67 - - - - 62 - - 59 58 - - 55 - - - - - - - 47 - - - - 42 41 - - - - - 35 - - - - - - - - 27 - - 24 - - - 20 19 18 - 16 - - - - 11 10 - 8 - - - 4 3 - 1	SALEABLE		345650003
MX123 CONN ASSY 73 CKT BLU OPT0 KEY C/37	345665663	C-HSG-C0	G-CAP-0-P	TPA-C0	RS	LS	MAL	CPA	MSEAL	RSEAL	72 71 70 - 68 - - 65 - 63 - 61 - 59 58 - 56 - - 53 - - - 49 - 47 - - - 43 - 41 40 39 38 - 36 - - - - - 30 29 - - - 25 24 23 22 21 20 - - 17 - - - - - - - - 8 7 6 5 4 3 2 1	SALEABLE		345650003
MX123 CONN ASSY 73 CKT BLU OPT0 KEY C/35	345665673	C-HSG-C0	G-CAP-0-P	TPA-C0	RS	LS	MAL	CPA	MSEAL	RSEAL	72 71 70 - 68 - - 65 - 63 62 - - 59 58 - 56 55 - 53 - - - - - 47 - - - 43 42 - 40 39 38 - 36 35 - - - - 30 29 - - 26 - 24 23 22 21 20 19 - 17 - - - - - - - - 8 7 6 5 4 3 2 1	SALEABLE		345650003

molex

MX123 SEALED RCPT ASSY (73 Ckt)
BOM & PIN OUT SHEET

ASSEMBLY DESCRIPTION	ASSEMBLY PART NUMBER	CONNECTOR HOUSING	GROMMET CAP	TPA	RIGHT SLIDE	LEFT SLIDE	MATE ASSIST LEVER	CPA	MAT SEAL	RING SEAL	BLOCKED TERMINALS CAVITY WITH A NUMBER INDICATES BLOCKED TERMINAL POSITION CAVITY WITHOUT A NUMBER INDICATES OPEN TERMINAL POSITION	STATUS	COMMENTS	INTEGRAL COMPONENTS SOLD SEPARATELY DRESS COVER
MX123 CONN ASSY 73 CKT GRY OPT0 KEY B/18	345665683	C-HSG-B0	G-CAP-0-P	TPA-B0	RS	LS	MAL	CPA	MSEAL	RSEAL	- 71 70 69 68 67 66 65 64 63 - - 60 59 58 57 56 55 54 53 - 51 50 49 - 47 - 45 - - 42 - - 39 38 37 36 35 34 33 - 32 31 - 29 28 27 26 25 24 23 22 21 - - - 17 - 15 - 13 12 11 10 9 8 7 6 5 - 3 2 1	SALEABLE		345650003
MX123 CONN ASSY 73 CKT BLK OPT0 KEY A/53	345665693	C-HSG-A0	G-CAP-0-P	TPA-A0	RS	LS	MAL	CPA	MSEAL	RSEAL	- - - - - 67 - - - - 62 - - 59 58 - - 55 - - - - - - - 47 - - - - 42 41 - - - - - 35 - - - - - - - - - - - 27 - - 24 - - - - 19 18 17 16 - - - - 11 10 - 8 - - - - 3 - 1	SALEABLE		345650003
MX123 CONN ASSY 73 CKT GRY OPT0 KEY B/52	345665703	C-HSG-B0	G-CAP-0-P	TPA-B0	RS	LS	MAL	CPA	MSEAL	RSEAL	72 71 70 69 - 67 66 65 64 63 62 61 60 - 58 - 56 - 54 - 52 51 50 - - 47 - 45 44 43 42 41 40 - 38 - 36 - 34 - - 32 31 30 - 28 27 26 25 24 - 22 - 20 19 - - 16 15 14 13 - - - 9 8 - 6 5 4 3 2 1	SALEABLE		345650003
MX123 CONN ASSY 73 CKT BLU OPT0 KEY C/40	345665713	C-HSG-C0	G-CAP-0-P	TPA-C0	RS	LS	MAL	CPA	MSEAL	RSEAL	72 71 70 - 68 - - 65 - 63 - 61 - 59 58 - 56 - - 53 - - - 49 - 47 - - - 43 - 41 40 39 38 - 36 - - - - - - 30 29 - - - 25 24 23 22 21 20 - - - - - - - - - - - - - - 6 5 4 3 2 1	SALEABLE		345650003
MX123 CONN ASSY 73 CKT BLU OPT0 KEY C/36	345665723	C-HSG-C0	G-CAP-0-P	TPA-C0	RS	LS	MAL	CPA	MSEAL	RSEAL	72 71 70 - 68 - - 65 - 63 62 - - 59 58 - 56 55 - 53 - - - - - 47 - - - 43 42 - 40 39 38 - 36 35 - - - 32 - 30 29 - - 26 - 24 23 22 21 20 19 - 17 - - - - - - - - - - - 6 5 4 3 2 1	SALEABLE		345650003
MX123 CONN ASSY 73 CKT BLK OPT0 KEY A/36	345665733	C-HSG-A0	G-CAP-0-P	TPA-A0	RS	LS	MAL	CPA	MSEAL	RSEAL	72 - - - 68 67 66 65 - - 62 61 - - - - - - - - - - 50 - 48 47 46 - - - - - 40 39 38 - - 35 - 33 - - 31 - 29 - 27 - 25 24 23 22 21 20 - - 17 - - 14 13 - 11 - 9 8 7 6 5 4 - 2 1	SALEABLE		345650003
MX123 CONN ASSY 73 CKT BLK OPT0 KEY A/36	345665743	C-HSG-A0	G-CAP-0-P	TPA-A0	RS	LS	MAL	CPA	MSEAL	RSEAL	72 - - - 68 - 66 65 - - 62 61 - - 58 - - - - - - - 50 - 48 47 46 - - - - - 40 39 38 - - 35 - 33 - - 31 - 29 - 27 - 25 24 23 22 21 20 - - 17 - - 14 13 - 11 - 9 8 7 6 5 4 - 2 1	SALEABLE		345650003
MX123 CONN ASSY 73 CKT BLK OPT0 KEY A/39	345665753	C-HSG-A0	G-CAP-0-P	TPA-A0	RS	LS	MAL	CPA	MSEAL	RSEAL	72 - - - 68 67 66 65 - - 62 61 - - 58 - - - - - - - 50 - 48 47 46 - - - - - 40 39 38 - - 35 - 33 - - 31 - 29 - 27 - 25 24 - 22 - 20 - - 17 - - 14 13 - 11 - 9 - 7 6 - 4 - 2 1	SALEABLE		345650003
MX123 CONN ASSY 73 CKT BLU OPT0 KEY C/42	345665763	C-HSG-C0	G-CAP-0-P	TPA-C0	RS	LS	MAL	CPA	MSEAL	RSEAL	- 71 - 69 - 67 - 65 64 - - 61 60 - 58 - 56 55 54 - - - 50 49 - - - 45 - 43 - 41 - - 38 - - 35 - - - 31 - 29 28 - - - - 23 - - - 19 18 17 16 - - - 12 11 - - - 7 - - - 3 - 1	SALEABLE		345650003
MX123 CONN ASSY 73 CKT BLU OPT0 KEY C/41	345665773	C-HSG-C0	G-CAP-0-P	TPA-C0	RS	LS	MAL	CPA	MSEAL	RSEAL	- 71 - 69 - 67 66 65 64 - - 61 60 - - - 56 55 54 - - - 50 49 - - 46 45 - 43 - 41 - - 38 - - 35 - - - 31 - 29 28 - - - - 23 - - - 19 18 - 16 - - - 12 11 10 9 - 7 - - - 3 - -	SALEABLE		345650003
MX123 CONN ASSY 73 CKT BLU OPT0 KEY C/38	345665783	C-HSG-C0	G-CAP-0-P	TPA-C0	RS	LS	MAL	CPA	MSEAL	RSEAL	- 71 - 69 - 67 66 65 64 - - 61 60 - 58 - 56 55 54 - - - 50 49 - - 46 45 - 43 - 41 - - 38 - - 35 - - - 31 - 29 28 - - - - 23 - - - 19 18 17 16 - - - 12 11 10 9 - 7 - - - 3 - 1	SALEABLE		345650003
MX123 CONN ASSY 73 CKT BLK OPT0 KEY B/34	345665793	C-HSG-B0	G-CAP-0-P	TPA-B0	RS	LS	MAL	CPA	MSEAL	RSEAL	- 71 - 69 - 67 - 65 64 63 62 61 - - 58 57 56 - - - - 51 - 49 - 47 - 45 44 43 42 41 - - 38 37 36 - - - - - - - - - - - - - 23 22 21 20 19 18 - - 15 14 13 12 11 - 9 - 7 6 5 4 3 - -	SALEABLE		345650003

molex

MX123 SEALED RCPT ASSY (73 Ckt)
BOM & PIN OUT SHEET

ASSEMBLY DESCRIPTION	ASSEMBLY PART NUMBER	CONNECTOR HOUSING	GROMMET CAP	TPA	RIGHT SLIDE	LEFT SLIDE	MATE ASSIST LEVER	CPA	MAT SEAL	RING SEAL	BLOCKED TERMINALS CAVITY WITH A NUMBER INDICATES BLOCKED TERMINAL POSITION CAVITY WITHOUT A NUMBER INDICATES OPEN TERMINAL POSITION	STATUS	COMMENTS	INTEGRAL COMPONENTS SOLD SEPARATELY DRESS COVER
MX123 CONN ASSY 73 CKT GRY OPT0 KEY B/55	345665803	C-HSG-B0	G-CAP-0-P	TPA-B0	RS	LS	MAL	CPA	MSEAL	RSEAL	72 71 70 69 68 67 66 - 64 63 62 61 60 - 58 - 56 - 54 - 52 51 50 - - - 46 45 44 43 42 41 40 - 38 - 36 - 34 - - 32 31 30 - 28 27 26 25 24 - 22 - 20 19 18 - - 16 15 14 13 - 11 10 9 8 - 6 5 4 3 2 1	SALEABLE		345650003
MX123 CONN ASSY 73 CKT GRY OPT0 KEY B/38	345665813	C-HSG-B0	G-CAP-0-P	TPA-B0	RS	LS	MAL	CPA	MSEAL	RSEAL	- 71 - 69 - 67 - 65 64 63 62 61 - - 58 57 56 - - - - 51 - 49 - 47 - 45 44 43 42 41 - - 38 37 36 - - - - - - - - - - - - - - 22 21 20 - - - - - 15 14 13 12 11 - 9 - - 6 5 4 3 - -	SALEABLE		345650003
MX123 CONN ASSY 73 CKT BLK OPT0 KEY A/21	345665823	C-HSG-A0	G-CAP-0-P	TPA-A0	RS	LS	MAL	CPA	MSEAL	RSEAL	- 71 - 69 68 67 66 65 64 - 62 61 60 59 58 57 56 55 54 53 - 51 50 - 48 47 46 45 44 - 42 - 40 39 38 37 36 35 34 33 - 32 - - 29 - - - 25 24 - 22 21 - - 18 17 - - - - 13 12 11 - 9 8 7 - 5 4 3 2 1	SALEABLE		345650003
MX123 CONN ASSY 73 CKT BLK OPT0 KEY A/22	345665833	C-HSG-A0	G-CAP-0-P	TPA-A0	RS	LS	MAL	CPA	MSEAL	RSEAL	- 71 - 69 68 67 66 65 64 - 62 61 60 59 58 57 56 55 54 53 - 51 50 - 48 47 46 45 44 - 42 - 40 39 38 37 36 35 34 33 - 32 - - 29 - - - 25 24 - 22 21 - - 18 17 - - - 13 - 11 - 9 8 7 - 5 4 3 2 1	SALEABLE		345650003
MX123 CONN ASSY 73 CKT BLU OPT0 KEY C/36	345665863	C-HSG-C0	G-CAP-0-P	TPA-C0	RS	LS	MAL	CPA	MSEAL	RSEAL	- 71 - 69 68 67 - 65 64 - - 61 60 - 58 - - - 54 - - - 50 49 48 47 - 45 - 43 - 41 - - 38 - - 35 - - - - 31 - 29 28 27 - - 24 23 - - 20 - - 17 - 16 - - 13 12 11 - - 8 7 - 5 4 - 2 1	SALEABLE		345650003
MX123 CONN ASSY 73 CKT GRY OPT0 KEY B/20	345665873	C-HSG-B0	G-CAP-0-P	TPA-B0	RS	LS	MAL	CPA	MSEAL	RSEAL	- 71 70 69 68 67 66 65 64 63 - - 60 59 58 57 56 55 54 53 - 51 50 49 - - - 45 - - 42 - - 39 38 37 36 35 34 33 - 32 31 - 29 28 27 26 25 24 23 22 21 - - - 17 - - - - 13 12 11 10 9 8 7 6 5 - 3 2 1	SALEABLE		345650003
MX123 CONN ASSY 73 CKT GRY OPT0 KEY B/19	345665883	C-HSG-B0	G-CAP-0-P	TPA-B0	RS	LS	MAL	CPA	MSEAL	RSEAL	- 71 70 69 68 67 66 65 64 63 - - 60 59 58 57 56 55 54 53 - 51 50 49 - - - 45 44 - 42 - - 39 38 37 36 35 34 33 - 32 31 - 29 28 27 26 25 24 23 22 21 - - - 17 - - - - 13 12 11 10 9 8 7 6 5 - 3 2 1	SALEABLE		345650003
MX123 CONN ASSY 73 CKT BLU OPT0 KEY C/35	345665893	C-HSG-C0	G-CAP-0-P	TPA-C0	RS	LS	MAL	CPA	MSEAL	RSEAL	72 71 70 - 68 - - 65 64 63 - 61 - 59 58 - 56 - - 53 - - - 49 - 47 - - - 43 - 41 40 39 38 - 36 - - - - - 31 30 29 - - - 25 24 23 22 21 20 - - 17 - - - - - - - - 8 7 6 5 4 3 2 1	SALEABLE		345650003
MX123 CONN ASSY 73 CKT BLK OPT0 KEY A/40	345665903	C-HSG-A0	G-CAP-0-P	TPA-A0	RS	LS	MAL	CPA	MSEAL	RSEAL	- - 70 - - - - 65 - - - 61 60 - 58 57 56 55 54 - 52 51 50 49 - 47 46 45 - - - 41 40 - 38 37 36 - 34 - - 31 30 - 28 - 26 25 24 - 22 21 20 19 18 - 16 15 14 - - - 10 - - 7 6 - - - - -	SALEABLE		345650003
MX123 CONN ASSY 73 CKT BLU OPT0 KEY C/34	345665913	C-HSG-C0	G-CAP-0-P	TPA-C0	RS	LS	MAL	CPA	MSEAL	RSEAL	72 71 70 - 68 - - 65 - 63 62 - - 59 58 - 56 55 - 53 - - - - - 47 - - - 43 42 - 40 39 38 - 36 35 - - - 31 30 29 - - 26 - 24 23 22 21 20 19 - 17 - - - - - - - - 8 7 6 5 4 3 2 1	SALEABLE		345650003
MX123 CONN ASSY 73 CKT BLU OPT0 KEY C/38	345665933	C-HSG-C0	G-CAP-0-P	TPA-C0	RS	LS	MAL	CPA	MSEAL	RSEAL	- 71 - 69 - 67 - 65 64 - - 61 60 - 58 - - - 54 - - - 50 49 - - - 45 - 43 - 41 - - 38 37 36 35 - - - 31 - 29 28 27 - - 24 - - - 20 19 18 17 16 - - 13 12 11 - - 8 - - - - 3 2 1	SALEABLE		345650003
MX123 CONN ASSY 73 CKT BLU OPT0 KEY C/41	345665943	C-HSG-C0	G-CAP-0-P	TPA-C0	RS	LS	MAL	CPA	MSEAL	RSEAL	- 71 - 69 - - - 65 64 - - 61 60 - 58 - - - 54 - - - 50 - - - - 45 - 43 - 41 - - 38 37 36 35 - - - 31 - 29 28 - - - 24 23 - - - 19 18 17 16 - - - 12 11 - - 8 7 - - - 3 2 1	SALEABLE		345650003

molex

MX123 SEALED RCPT ASSY (73 Ckt)
BOM & PIN OUT SHEET

ASSEMBLY DESCRIPTION	ASSEMBLY PART NUMBER	CONNECTOR HOUSING	GROMMET CAP	TPA	RIGHT SLIDE	LEFT SLIDE	MATE ASSIST LEVER	CPA	MAT SEAL	RING SEAL	BLOCKED TERMINALS CAVITY WITH A NUMBER INDICATES BLOCKED TERMINAL POSITION CAVITY WITHOUT A NUMBER INDICATES OPEN TERMINAL POSITION	STATUS	COMMENTS	INTEGRAL COMPONENTS SOLD SEPARATELY DRESS COVER
MX123 CONN ASSY 73 CKT BLK OPT0 KEY A/45	345665953	C-HSG-A0	G-CAP-0-P	TPA-A0	RS	LS	MAL	CPA	MSEAL	RSEAL	72 - - - 68 67 66 - - - - - - 59 - - - - - - - - 50 - - - 46 - - - - - 40 39 38 - - 35 - 33 - - 31 - - - - 25 - 23 22 21 20 - - 17 - - 14 - - - - 9 8 7 6 5 4 - 2 1	SALEABLE		345650003
MX123 CONN ASSY 73 CKT GRY OPT0 KEY B/51	345665963	C-HSG-B0	G-CAP-0-P	TPA-B0	RS	LS	MAL	CPA	MSEAL	RSEAL	- - - 69 - - - 65 64 63 - - - - - - - - - - - - 49 - - - 45 44 43 - - - - - - - - - - - - - - - - - - - 23 22 21 20 19 - 17 - - - - 12 11 - - - 7 6 5 4 - 2 1	SALEABLE		345650003
MX123 CONN ASSY 73 CKT BLU OPT0 KEY C/41	345665973	C-HSG-C0	G-CAP-0-P	TPA-C0	RS	LS	MAL	CPA	MSEAL	RSEAL	- 71 - 69 - - - 65 64 - - 61 60 - 58 - - - 54 - - - 50 49 - - - 45 - 43 - 41 - - 38 37 36 35 - - - 31 - 29 28 - - - 24 23 - - 20 - - 17 16 - - 13 12 11 - - 8 7 - - - - 2 1	SALEABLE		345650003
MX123 CONN ASSY 73 CKT BLU OPT0 KEY C/36	345665983	C-HSG-C0	G-CAP-0-P	TPA-C0	RS	LS	MAL	CPA	MSEAL	RSEAL	72 71 70 - 68 - - 65 - 63 - 61 - 59 58 - 56 - - 53 - - - 49 - 47 - - - 43 - 41 40 39 38 - 36 - - - - 31 30 29 - - - 25 24 23 22 21 20 - - 17 - - - - - - - - 8 7 6 5 4 3 2 1	SALEABLE		345650003
MX123 CONN ASSY 73 CKT BLK OPT0 KEY A/61	345665993	C-HSG-A0	G-CAP-0-P	TPA-A0	RS	LS	MAL	CPA	MSEAL	RSEAL	72 - - - 68 - - - 64 - - - - 59 - - - - - - - - - - 48 - 46 - - - - - - - 38 - - - - 33 - - - - - - - - - - 22 - - - - - - - - - - - - - - 7 - - 4 - 2 -	SALEABLE		345650003
MX123 CONN ASSY 73 CKT GRY OPT0 KEY B/55	345666003	C-HSG-B0	G-CAP-0-P	TPA-B0	RS	LS	MAL	CPA	MSEAL	RSEAL	72 71 70 69 68 - - - 64 63 62 61 60 - 58 - 56 - 54 - 52 51 50 - - - 46 45 44 43 42 41 40 - 38 - 36 - 34 - 32 31 30 - 28 27 26 25 24 - 22 - 20 19 18 17 16 15 14 13 12 11 10 9 8 - 6 5 4 3 2 1	SALEABLE		345650003
MX123 CONN ASSY 73 CKT GRY OPT0 KEY B/46	345666013	C-HSG-B0	G-CAP-0-P	TPA-B0	RS	LS	MAL	CPA	MSEAL	RSEAL	72 71 70 - 68 - 66 - 64 63 62 - - - - - 56 55 - - 52 - - - - - - - 44 - 42 41 - - 38 - 36 35 - - - - - - 28 27 - 25 - - - - - 19 - 17 - - - - 12 11 - - - - - - - 3 2 1	SALEABLE		345650003
MX123 CONN ASSY 73 CKT BLK OPT0 KEY A/56	345666023	C-HSG-A0	G-CAP-0-P	TPA-A0	RS	LS	MAL	CPA	MSEAL	RSEAL	- - - - - - 66 65 64 63 62 61 - - - - - 55 - - - - - - - - 46 - - - 42 41 - - - - - - - - - - - - - 27 26 25 - - - - - - 18 - - - 14 - - - - 9 8 - - - - - - - -	SALEABLE		345650003
MX123 CONN ASSY 73 CKT BLK OPT0 KEY A/39	345666033	C-HSG-A0	G-CAP-0-P	TPA-A0	RS	LS	MAL	CPA	MSEAL	RSEAL	72 71 - - 68 67 66 65 64 - - - 60 59 - - - - - - - - 50 - 48 47 46 45 - - - - 40 39 38 - - 35 - 33 - 31 30 - - - - 25 24 23 22 - 20 - - 17 - - 14 - - - - 9 - 7 6 - 4 - 2 1	SALEABLE		345650003
MX123 CONN ASSY 73 CKT GRY OPT0 KEY B/23	345666043	C-HSG-B0	G-CAP-0-P	TPA-B0	RS	LS	MAL	CPA	MSEAL	RSEAL	72 71 70 69 - - - - - 63 62 61 60 59 - 57 56 - 54 53 52 51 50 49 48 47 - - 44 43 42 41 40 39 - 37 36 - 34 33 - 31 - - - - 26 25 24 23 - 21 20 - 18 - - 15 14 13 12 11 - 9 8 7 6 5 4 3 2 -	SALEABLE		345650003
MX123 CONN ASSY 73 CKT GRY OPT0 KEY B/20	345666053	C-HSG-B0	G-CAP-0-P	TPA-B0	RS	LS	MAL	CPA	MSEAL	RSEAL	- 71 70 69 68 67 66 65 64 63 - - 60 59 58 57 56 55 54 53 - 51 50 49 - - - 45 44 - 42 - - 39 38 37 36 35 34 33 32 31 - 29 28 27 26 25 24 23 22 21 - - - 17 - - - 13 12 11 10 9 8 7 6 5 - 3 - 1	SALEABLE		345650003
MX123 CONN ASSY 73 CKT BLU OPT0 KEY C/37	345666063	C-HSG-C0	G-CAP-0-P	TPA-C0	RS	LS	MAL	CPA	MSEAL	RSEAL	72 71 70 - 68 - - 65 - 63 - 61 - 59 58 - 56 - - 53 - - - 49 - 47 - - - 43 - 41 40 39 38 - 36 - - - - 31 30 29 - - - 25 24 23 22 21 20 - - - - - - - - - - - 8 7 6 5 4 3 2 1	SALEABLE		345650003

molex

MX123 SEALED RCPT ASSY (73 Ckt)
BOM & PIN OUT SHEET

ASSEMBLY DESCRIPTION	ASSEMBLY PART NUMBER	CONNECTOR HOUSING	GROMMET CAP	TPA	RIGHT SLIDE	LEFT SLIDE	MATE ASSIST LEVER	CPA	MAT SEAL	RING SEAL	BLOCKED TERMINALS CAVITY WITH A NUMBER INDICATES BLOCKED TERMINAL POSITION CAVITY WITHOUT A NUMBER INDICATES OPEN TERMINAL POSITION	STATUS	COMMENTS	INTEGRAL COMPONENTS SOLD SEPARATELY DRESS COVER
MX123 CONN ASSY 73 CKT BLU OPT0 KEY C/35	345666073	C-HSG-C0	G-CAP-0-P	TPA-C0	RS	LS	MAL	CPA	MSEAL	RSEAL	72 71 70 - 68 - - 65 - 63 62 - - 59 58 - 56 55 - 53 - - - - - 47 - - - 43 42 - 40 39 38 - 36 35 - - - - 31 30 29 - - 26 - 24 23 22 21 20 19 - - - - - - - - - - 8 7 6 5 4 3 2 1	SALEABLE		345650003
MX123 CONN ASSY 73 CKT BLU OPT0 KEY C/38	345666083	C-HSG-C0	G-CAP-0-P	TPA-C0	RS	LS	MAL	CPA	MSEAL	RSEAL	- 71 - 69 - - - 65 64 - - 61 60 - 58 - 56 55 54 - - - 50 49 - - - 45 - 43 - 41 - - 38 - - 35 - - - 31 - 29 28 27 - - 24 23 - - 20 19 18 17 16 - - 13 12 11 - - 8 7 - - - 3 - 1	SALEABLE		345650003
MX123 CONN ASSY 73 CKT GRY OPT0 KEY B/22	345666093	C-HSG-B0	G-CAP-0-P	TPA-B0	RS	LS	MAL	CPA	MSEAL	RSEAL	- 71 - 69 68 - 66 65 64 - - - - - 58 57 56 55 54 53 - 51 50 49 48 47 - 45 44 - 42 - - 39 38 37 36 35 34 33 32 31 30 29 28 - 26 25 24 23 22 21 - - - 17 - 15 - 13 12 - 10 9 8 7 6 5 - 3 2 1	SALEABLE		345650003
MX123 CONN ASSY 73 CKT GRY OPT0 KEY B/51	345666103	C-HSG-B0	G-CAP-0-P	TPA-B0	RS	LS	MAL	CPA	MSEAL	RSEAL	72 71 70 69 68 - - - 64 63 - 61 60 - 58 - 56 - 54 - 52 51 50 - - - 46 45 44 43 - 41 40 - 38 - 36 - 34 - 32 31 30 - 28 27 - 25 24 - 22 - 20 19 18 17 16 15 14 13 12 11 10 - 8 - 6 5 4 3 2 1	SALEABLE		345650003
MX123 CONN ASSY 73 CKT BLK OPT0 KEY A/66	345666113	C-HSG-A0	G-CAP-0-P	TPA-A0	RS	LS	MAL	CPA	MSEAL	RSEAL	- - - - - 67 - - - - - - - 59 - - - - - - - - - - - 47 - - - - - - - - - - - 35 - - - - - - - - - - - - - 24 - - - - - - 17 - - - - - - - - - - - - - - - - - - 1	SALEABLE		345650003
MX123 CONN ASSY 73 CKT BLU OPT0 KEY C/33	345666123	C-HSG-C0	G-CAP-0-P	TPA-C0	RS	LS	MAL	CPA	MSEAL	RSEAL	72 71 70 - 68 - - 65 - 63 - 61 - 59 58 - 56 55 - 53 - - - 49 - 47 - - - 43 - 41 40 39 38 - 36 35 - - 32 31 30 29 - - - 25 24 23 22 21 20 19 18 17 - - - - - - - - - - - 6 5 4 3 2 1	SALEABLE		345650003
MX123 CONN ASSY 73 CKT BLU OPT9 KEY C/38	345666133	C-HSG-C9	G-CAP-9-P	TPA-C9	RS	LS	MAL	CPA	MSEAL	RSEAL	- 71 - 69 - - 66 65 64 - - 61 60 - 58 - 56 55 54 - - - 50 49 - - 46 45 - 43 - 41 - - - - - 35 - - - 31 - 29 28 27 - - - 23 - - 20 19 18 17 16 - - 13 12 11 10 - - 7 - - - 3 - 1	SALEABLE		345650003
MX123 CONN ASSY 73 CKT GRY OPT9 KEY B/33	345666173	C-HSG-B9	G-CAP-9-P	TPA-B9	RS	LS	MAL	CPA	MSEAL	RSEAL	72 71 70 69 68 - - 65 64 63 62 61 60 59 58 57 56 55 54 53 52 51 50 49 - - 46 45 44 43 42 - 40 39 38 37 36 35 34 33 - - - - 28 - - - - 23 - - 20 - - - - - - - 12 - - - - - - - - - 2 -	SALEABLE		345650003
MX123 CONN ASSY 73 CKT BLK OPT9 KEY A/32	345666183	C-HSG-A9	G-CAP-9-P	TPA-A9	RS	LS	MAL	CPA	MSEAL	RSEAL	72 71 70 69 68 67 - 65 64 63 62 61 60 59 58 57 56 55 54 53 52 51 50 49 - - 46 45 44 43 42 - 40 39 38 37 36 35 34 33 - - - - 28 - - - - 23 - - 20 - - - - - - - 12 - - - - - - - - - 2 -	SALEABLE		345650003
MX123 CONN ASSY 73 CKT GRY OPT9 KEY B/57	345666193	C-HSG-B9	G-CAP-9-P	TPA-B9	RS	LS	MAL	CPA	MSEAL	RSEAL	- - - - - - - - - 63 - - - - - - - - - 53 - - - - 48 47 - 45 - 43 42 - - 39 - - - 35 34 33 - - - - - - - - - 23 22 - - 19 - - - - - - - 11 - - - - - - - - - 1	SALEABLE		345650003
MX123 CONN ASSY 73 CKT BLK OPT0 KEY A/33	345666203	C-HSG-A0	G-CAP-0-P	TPA-A0	RS	LS	MAL	CPA	MSEAL	RSEAL	72 - - - - 67 66 - - - 62 - 60 - 58 - - 55 54 53 - - - - 48 - 46 45 44 43 42 - 40 39 - - - 35 - - - - - - - - - - 26 25 - - 22 21 - - - 17 - 15 14 - - - - - 8 7 6 5 4 3 2 -	SALEABLE		345650003
MX123 CONN ASSY 73 CKT BLK OPT9 KEY A/33	345666213	C-HSG-A9	G-CAP-9-P	TPA-A9	RS	LS	MAL	CPA	MSEAL	RSEAL	72 71 70 69 68 - - 65 64 63 62 61 60 59 58 57 56 55 54 53 52 51 50 49 - - 46 45 44 43 42 - 40 39 38 37 36 35 34 33 - - - - 28 - - - - 23 - - 20 - - - - - - - 12 - - - - - - - - - 2 -	SALEABLE		345650003

molex

MX123 SEALED RCPT ASSY (73 Ckt)
BOM & PIN OUT SHEET

ASSEMBLY DESCRIPTION	ASSEMBLY PART NUMBER	CONNECTOR HOUSING	GROMMET CAP	TPA	RIGHT SLIDE	LEFT SLIDE	MATE ASSIST LEVER	CPA	MAT SEAL	RING SEAL	BLOCKED TERMINALS CAVITY WITH A NUMBER INDICATES BLOCKED TERMINAL POSITION CAVITY WITHOUT A NUMBER INDICATES OPEN TERMINAL POSITION	STATUS	COMMENTS	INTEGRAL COMPONENTS SOLD SEPARATELY DRESS COVER
MX123 CONN ASSY 73 CKT BLU OPT9 KEY C/36	345666223	C-HSG-C9	G-CAP-9-P	TPA-C9	RS	LS	MAL	CPA	MSEAL	RSEAL	- 71 - 69 - 67 - 65 64 - - 61 60 - 58 - 56 55 54 - - - 50 49 - - - 45 - 43 42 41 - - 38 37 36 35 - - - 31 - 29 28 - - - 24 23 - - - 19 18 17 - 16 - - - 12 11 - - 8 7 - - - 3 2 1	SALEABLE		345650003
MX123 CONN ASSY 73 CKT GRY OPT9 KEY B/34	345666233	C-HSG-B9	G-CAP-9-P	TPA-B9	RS	LS	MAL	CPA	MSEAL	RSEAL	- 71 - 69 - 67 - 65 64 63 62 61 - - 58 57 56 - - - - 51 - 49 - 47 - 45 44 43 42 41 - - 38 37 36 - - - - - - - - - - - - 23 22 21 20 19 18 - - 15 14 13 12 11 - 9 - 7 6 5 4 3 - -	SALEABLE		345650003
MX123 CONN ASSY 73 CKT BLK OPT9 KEY A/39	345666243	C-HSG-A9	G-CAP-9-P	TPA-A9	RS	LS	MAL	CPA	MSEAL	RSEAL	72 - - - 68 67 66 65 - - 62 61 - - - - - - - - - - - - 48 47 46 - - - - - 40 - 38 - - 35 - 33 - 31 - 29 - 27 - 25 24 23 22 21 20 - - 17 - - - 13 - 11 - 9 8 7 6 5 4 - 2 1	SALEABLE		345650003
MX123 CONN ASSY 73 CKT BLU OPT9 KEY C/43	345666253	C-HSG-C9	G-CAP-9-P	TPA-C9	RS	LS	MAL	CPA	MSEAL	RSEAL	- 71 - 69 - - - 65 64 - - 61 60 - 58 - 56 55 54 - - - 50 - - - - 45 - 43 42 41 - - 38 - - 35 - - - 31 - 29 28 - - - - 23 - - - 19 18 17 16 - - - 12 11 - - - 7 - - - 3 - 1	SALEABLE		345650003
MX123 CONN ASSY 73 CKT GRY OPT9 KEY B/53	345666263	C-HSG-B9	G-CAP-9-P	TPA-B9	RS	LS	MAL	CPA	MSEAL	RSEAL	- - - 69 - - - 65 64 63 - - - - - - - - - - - - - 49 - - - 45 44 43 - - - - - - - - - - - - - - - - - - - 23 22 21 20 19 - - - - - - 12 11 - 9 - 7 6 5 4 - - -	SALEABLE		345650003
MX123 CONN ASSY 73 CKT GRY OPT9 KEY B/48	345666273	C-HSG-B9	G-CAP-9-P	TPA-B9	RS	LS	MAL	CPA	MSEAL	RSEAL	72 - - - 68 67 66 - - - - - - 59 - - - - - - - - - - - - 46 - - - - - 40 - 38 - - 35 - 33 - 31 - - - - - 25 - 23 22 21 20 - - 17 - - - - - - - 9 8 7 6 5 4 - 2 1	SALEABLE		345650003
MX123 CONN ASSY 73 CKT BLU OPT9 KEY C/35	345666283	C-HSG-C9	G-CAP-9-P	TPA-C9	RS	LS	MAL	CPA	MSEAL	RSEAL	- 71 - 69 - - - 65 64 - - 61 60 - 58 - 56 55 54 - - - 50 49 - - - 45 - 43 42 41 - - 38 37 36 35 - - - 31 - 29 28 - - - 24 23 - - 20 19 18 17 16 - - 13 12 11 - - 8 7 - - - 3 2 1	SALEABLE		345650003
MX123 CONN ASSY 73 CKT GRY OPT9 KEY B/51	345666293	C-HSG-B9	G-CAP-9-P	TPA-B9	RS	LS	MAL	CPA	MSEAL	RSEAL	- - - 69 - - - 65 64 63 - - - - - - - - - - - - - 49 - - - 45 44 43 - - - - - - - - - - - - - - - - - - - 23 22 21 20 19 18 - - - - - 12 11 - 9 - 7 6 5 4 3 - -	SALEABLE		345650003
MX123 CONN ASSY 73 CKT BLK OPT0 KEY A/32	345666303	C-HSG-A0	G-CAP-0-P	TPA-A0	RS	LS	MAL	CPA	MSEAL	RSEAL	72 - - - - 67 66 - - - 62 - 60 - 58 - - 55 54 53 - - - - 48 - 46 45 44 43 42 - 40 39 - - - 35 - - - - - - - - 26 25 - - 22 21 - - - 17 - 15 14 - - - - - 8 7 6 5 4 3 - -	SALEABLE		345650003
MX123 CONN ASSY 73 CKT GRY OPT9 KEY B/40	345666313	C-HSG-B9	G-CAP-9-P	TPA-B9	RS	LS	MAL	CPA	MSEAL	RSEAL	72 71 - - 68 67 66 65 64 - - - - 59 - - - - - - - - - - 48 47 46 45 - - - - 40 - 38 - - 35 - 33 - 31 30 - - - - 25 24 23 22 21 20 - - 17 - - - - - - - 9 8 7 6 5 4 - 2 1	SALEABLE		345650003
MX123 CONN ASSY 73 CKT GRY OPT9 KEY B/39	345666323	C-HSG-B9	G-CAP-9-P	TPA-B9	RS	LS	MAL	CPA	MSEAL	RSEAL	72 - - - 68 67 66 65 - - 62 61 - - - - - - - - - - - - 48 47 46 - - - - - 40 - 38 - - 35 - 33 - 31 - 29 - 27 - 25 24 23 22 21 20 - - 17 - - - 13 - 11 - 9 8 7 6 5 4 - 2 1	SALEABLE		345650003
MX123 CONN ASSY 73 CKT BLU OPT9 KEY C/40	345666333	C-HSG-C9	G-CAP-9-P	TPA-C9	RS	LS	MAL	CPA	MSEAL	RSEAL	- 71 - 69 - - - 65 64 - - 61 60 - 58 - - - 54 - - - 50 49 - - - 45 - 43 42 41 - - 38 37 36 35 - - - 31 - 29 28 - - - 24 23 - - 20 - - 17 16 - - 13 12 11 - - 8 7 - - - - 2 1	SALEABLE		345650003

molex

MX123 SEALED RCPT ASSY (73 Ckt)
BOM & PIN OUT SHEET

ASSEMBLY DESCRIPTION	ASSEMBLY PART NUMBER	CONNECTOR HOUSING	GROMMET CAP	TPA	RIGHT SLIDE	LEFT SLIDE	MATE ASSIST LEVER	CPA	MAT SEAL	RING SEAL	BLOCKED TERMINALS CAVITY WITH A NUMBER INDICATES BLOCKED TERMINAL POSITION CAVITY WITHOUT A NUMBER INDICATES OPEN TERMINAL POSITION	STATUS	COMMENTS	INTEGRAL COMPONENTS SOLD SEPARATELY DRESS COVER
MX123 CONN ASSY 73 CKT BLK OPT9 KEY A/44	345666343	C-HSG-A9	G-CAP-9-P	TPA-A9	RS	LS	MAL	CPA	MSEAL	RSEAL	72 71 - - 68 67 66 65 64 - - - - 59 - - - - - - - - - - 48 47 46 45 - - - - - - 38 - - 35 - 33 - - - 31 30 - - - - 25 24 23 22 21 20 - - - - - - - - - - - 9 8 7 6 5 4 - - -	SALEABLE		345650003
MX123 CONN ASSY 73 CKT BLU OPT9 KEY C/43	345666353	C-HSG-C9	G-CAP-9-P	TPA-C9	RS	LS	MAL	CPA	MSEAL	RSEAL	- 71 - 69 - 67 - 65 64 - - 61 60 - - - - - 54 - - - 50 49 - - - 45 - 43 42 41 - - 38 37 36 35 - - - 31 - 29 28 - - - 24 - - - - 19 18 - 16 - - - 12 11 - - 8 - - - - 3 2 -	SALEABLE		345650003
MX123 CONN ASSY 73 CKT GRY OPT9 KEY B/38	345666363	C-HSG-B9	G-CAP-9-P	TPA-B9	RS	LS	MAL	CPA	MSEAL	RSEAL	- 71 - 69 - 67 - 65 64 63 62 61 - - 58 57 56 - - - - 51 - 49 - 47 - 45 44 43 42 41 - - 38 37 36 - - - - - - - - - - - - - 22 21 20 - - - - 15 14 13 12 11 - 9 - - 6 5 4 3 - -	SALEABLE		345650003
MX123 CONN ASSY 73 CKT BLK OPT9 KEY A/50	345666373	C-HSG-A9	G-CAP-9-P	TPA-A9	RS	LS	MAL	CPA	MSEAL	RSEAL	- - - - 68 - 66 65 - - 62 61 - - - - - - - - - - - 48 - 46 - - - - - - - 38 - - 35 - 33 - 31 - 29 - 27 - 25 24 - 22 - 20 - - - - - - 13 - 11 - 9 - 7 6 - 4 - - -	SALEABLE		345650003
MX123 CONN ASSY 73 CKT BLK OPT9 KEY A/52	345666383	C-HSG-A9	G-CAP-9-P	TPA-A9	RS	LS	MAL	CPA	MSEAL	RSEAL	- - - - - 67 - - - - 62 - - 59 58 - - 55 - - - - - - - 47 - - - - - - - - - - 35 - - - - - - - - - - 27 26 25 24 - - - 20 19 18 17 16 - - - - 11 10 - 8 - - - 4 3 - -	SALEABLE		345650003
MX123 CONN ASSY 73 CKT BLU OPT9 KEY C/47	345666393	C-HSG-C9	G-CAP-9-P	TPA-C9	RS	LS	MAL	CPA	MSEAL	RSEAL	72 - - - 68 - - - - 63 - - - 59 - - 56 - - 53 - - - - - - - - - 43 - - 40 39 - - 36 - - - - 31 30 29 - - - - 24 23 22 21 20 - - - - - - - - - - - 8 7 6 5 4 3 2 1	SALEABLE		345650003
MX123 CONN ASSY 73 CKT BLK OPT0 KEY A/34	345666403	C-HSG-A0	G-CAP-0-P	TPA-A0	RS	LS	MAL	CPA	MSEAL	RSEAL	72 - 70 - - 67 66 - - - 62 - 60 - - 57 - 55 54 53 - 51 - - 48 - 46 45 44 43 42 - 40 39 - - - 35 - - - - - 26 25 - - 22 21 - - - - - 15 14 - - - - - 8 7 6 5 4 3 2 -	SALEABLE		345650003
MX123 CONN ASSY 73 CKT GRY OPT9 KEY B/35	345666413	C-HSG-B9	G-CAP-9-P	TPA-B9	RS	LS	MAL	CPA	MSEAL	RSEAL	- 71 70 69 - - 66 65 64 - - - - - 58 57 56 - 54 53 - 51 50 49 - - - 45 - - 42 - - 39 - - - - 34 33 32 31 - 29 28 - 26 25 24 23 22 21 - - - - - - - 13 12 - 10 9 - 7 6 5 - 3 2 -	SALEABLE		345650003
MX123 CONN ASSY 73 CKT BLU OPT9 KEY C/41	345666423	C-HSG-C9	G-CAP-9-P	TPA-C9	RS	LS	MAL	CPA	MSEAL	RSEAL	- - - - 68 - - - - 63 62 61 60 59 58 57 - 55 - 53 - - - - 48 - - - - 43 42 41 40 - - 37 36 35 - 33 32 - - - - 27 - - 24 - - - 20 19 18 - - - - - - 11 10 - 8 - - - 4 3 2 1	SALEABLE		345650003
MX123 CONN ASSY 73 CKT BLK OPT9 KEY A/36	345666433	C-HSG-A9	G-CAP-9-P	TPA-A9	RS	LS	MAL	CPA	MSEAL	RSEAL	- 71 - 69 68 - 66 65 64 - 62 61 - - - - - 54 53 - - 50 49 - - - 45 44 - - 41 - - - - - 34 33 32 31 30 29 - - 26 25 24 23 - - 20 19 - - 16 15 14 13 - - 10 - 8 - 6 5 4 3 - -	SALEABLE		345650003
MX123 CONN ASSY 73 CKT GRY OPT9 KEY B/64	345666443	C-HSG-B9	G-CAP-9-P	TPA-B9	RS	LS	MAL	CPA	MSEAL	RSEAL	- - - - - - - - - - 62 - - 59 58 - - - 54 53 - - - - - - - - - - 42 - - 39 - - - - - - - - - - - - - - 27 - - - - - - - - - - - - - - - - - - - 10 - - - - - - - - -	SALEABLE		345650003
MX123 CONN ASSY 73 CKT BLU OPT0 KEY C/43	345666453	C-HSG-C0	G-CAP-0-P	TPA-C0	RS	LS	MAL	CPA	MSEAL	RSEAL	72 - - - 68 - 66 - - 63 - - - 59 58 - 56 55 - 53 - - - - - - - - - 43 - - 40 39 38 - 36 35 - - - 31 30 29 - - - - 24 23 22 21 20 19 - - - - - - - - - - - - 6 5 4 3 2 1	SALEABLE		345650003

molex

MX123 SEALED RCPT ASSY (73 Ckt)
BOM & PIN OUT SHEET

ASSEMBLY DESCRIPTION	ASSEMBLY PART NUMBER	CONNECTOR HOUSING	GROMMET CAP	TPA	RIGHT SLIDE	LEFT SLIDE	MATE ASSIST LEVER	CPA	MAT SEAL	RING SEAL	BLOCKED TERMINALS CAVITY WITH A NUMBER INDICATES BLOCKED TERMINAL POSITION CAVITY WITHOUT A NUMBER INDICATES OPEN TERMINAL POSITION	STATUS	COMMENTS	INTEGRAL COMPONENTS SOLD SEPARATELY DRESS COVER
MX123 CONN ASSY 73 CKT GRY OPT0 KEY B/23	345666463	C-HSG-B0	G-CAP-0-P	TPA-B0	RS	LS	MAL	CPA	MSEAL	RSEAL	- 71 70 69 - - 66 65 64 63 - - 60 59 58 57 56 - 54 53 - 51 50 49 - - - 45 44 - 42 41 - 39 38 37 36 35 34 33 - 32 31 - 29 28 27 26 25 24 23 22 21 - - - 17 - - - 13 12 11 10 9 - 7 6 5 - 3 - 1	SALEABLE		345650003
MX123 CONN ASSY 73 CKT BLU OPT9 KEY C/40	345666473	C-HSG-C9	G-CAP-9-P	TPA-C9	RS	LS	MAL	CPA	MSEAL	RSEAL	72 71 - - 68 - - 65 - 63 - 61 - 59 58 - 56 - - 53 - - - 49 - 47 - - 43 - 41 40 39 38 - 36 - - - - - 31 30 29 - - - 25 24 23 22 21 20 - - - - - - - - - - - - - 6 5 4 3 2 1	SALEABLE		345650003
MX123 CONN ASSY 73 CKT BLK OPT9 KEY A/52	345666483	C-HSG-A9	G-CAP-9-P	TPA-A9	RS	LS	MAL	CPA	MSEAL	RSEAL	- - - - - 67 - - - - 62 - - 59 58 - - 55 - - - - - - - 47 - - - - 42 41 - - - - - 35 - - - - - - - - - - 27 - - 24 - - - - 19 18 17 16 - - - - 11 10 - 8 - - - 4 3 - 1	SALEABLE		345650003
MX123 CONN ASSY 73 CKT GRY OPT9 KEY B/22	345666493	C-HSG-B9	G-CAP-9-P	TPA-B9	RS	LS	MAL	CPA	MSEAL	RSEAL	- 71 - 69 68 67 66 65 64 63 - - 60 59 58 57 56 - 54 53 - 51 50 49 - - - 45 44 - 42 - - 39 38 37 36 35 34 33 32 31 - 29 28 27 26 25 24 23 22 21 - - - 17 - - - 13 12 11 10 9 8 7 6 5 - 3 - 1	SALEABLE		345650003
MX123 CONN ASSY 73 CKT BLK OPT0 KEY A/33	345666503	C-HSG-A0	G-CAP-0-P	TPA-A0	RS	LS	MAL	CPA	MSEAL	RSEAL	72 - 70 - - 67 66 - - - 62 - 60 - - 57 - 55 54 53 - 51 - - 48 - 46 45 44 43 42 - 40 39 - - - 35 - - - - - - - - 26 25 - - 22 21 - - - - - 15 14 - - - - - 8 7 6 5 4 3 - -	SALEABLE		345650003
MX123 CONN ASSY 73 CKT GRY OPT0 KEY B/23	345666513	C-HSG-B0	G-CAP-0-P	TPA-B0	RS	LS	MAL	CPA	MSEAL	RSEAL	- 71 70 69 - - 66 65 64 63 - - 60 59 58 57 56 - - 53 - 51 50 49 48 47 - 45 44 - 42 41 - 39 38 37 36 35 34 33 32 31 30 29 28 27 26 25 24 23 22 21 - - - - - - - 13 12 11 10 9 - 7 6 5 - - - 1	SALEABLE		345650003
MX123 CONN ASSY 73 CKT GRY OPT0 KEY B/25	345666523	C-HSG-B0	G-CAP-0-P	TPA-B0	RS	LS	MAL	CPA	MSEAL	RSEAL	72 71 70 69 - - 66 65 - 63 62 61 60 - - 57 56 55 - 53 52 51 50 49 48 47 - - 44 43 42 41 40 - - 37 36 35 34 33 - 31 - - - - 26 25 24 - - 21 20 19 18 - 16 - 14 - 12 - - 9 8 7 - 5 4 3 2 -	SALEABLE		345650003
MX123 CONN ASSY 73 CKT GRY OPT9 KEY B/15	345666533	C-HSG-B9	G-CAP-9-P	TPA-B9	RS	LS	MAL	CPA	MSEAL	RSEAL	72 71 70 69 - - 66 65 - 63 62 61 60 59 58 57 56 55 54 53 52 51 50 49 48 47 - - 44 43 42 41 40 39 38 37 36 35 34 33 - 31 - - - 26 25 24 23 22 21 20 19 18 - 16 15 14 13 12 11 - 9 8 - 6 5 4 3 2 -	SALEABLE		345650003
MX123 CONN ASSY 73 CKT BLK OPT9 KEY A/53	345666543	C-HSG-A9	G-CAP-9-P	TPA-A9	RS	LS	MAL	CPA	MSEAL	RSEAL	- - - - - 67 - - - - 62 - - 59 58 - - 55 - - - - - - - 47 - - - - 42 41 - - - - - 35 - - - - - - - - - - 27 - - 24 - - - - 19 18 17 16 - - - - 11 10 - 8 - - - - 3 - 1	SALEABLE		345650003
MX123 CONN ASSY 73 CKT BLK OPT9 KEY A/46	345666553	C-HSG-A9	G-CAP-9-P	TPA-A9	RS	LS	MAL	CPA	MSEAL	RSEAL	- - - - 68 - 66 65 - - 62 61 - - - - - - - - - - - - 48 - 46 - - - - - - - 38 - - 35 - 33 - 31 - 29 - 27 - 25 24 23 22 21 20 - - - 16 - - 13 12 11 - 9 - 7 6 - 4 - - -	SALEABLE		345650003
MX123 CONN ASSY 73 CKT BLU OPT9 KEY C/41	345666563	C-HSG-C9	G-CAP-9-P	TPA-C9	RS	LS	MAL	CPA	MSEAL	RSEAL	- 71 - 69 - 67 - 65 64 - - 61 60 - - - 56 55 54 - - - 50 49 - - - 45 - 43 42 41 - - 38 37 36 35 - - - 31 - 29 28 - - - 24 - - - - 19 18 - 16 - - - 12 11 - - 8 - - - - 3 2 -	SALEABLE		345650003
MX123 CONN ASSY 73 CKT BLK OPT9 KEY A/47	345666573	C-HSG-A9	G-CAP-9-P	TPA-A9	RS	LS	MAL	CPA	MSEAL	RSEAL	- - - - 68 - 66 65 - - 62 61 - - - - - - - - - - - - 48 - 46 - - - - - - - 38 - - 35 - 33 - 31 - 29 - 27 - 25 24 - 22 - 20 - - 17 - - - 13 - 11 - 9 - 7 6 - 4 - 2 1	SALEABLE		345650003

molex

MX123 SEALED RCPT ASSY (73 Ckt)
BOM & PIN OUT SHEET

ASSEMBLY DESCRIPTION	ASSEMBLY PART NUMBER	CONNECTOR HOUSING	GROMMET CAP	TPA	RIGHT SLIDE	LEFT SLIDE	MATE ASSIST LEVER	CPA	MAT SEAL	RING SEAL	BLOCKED TERMINALS CAVITY WITH A NUMBER INDICATES BLOCKED TERMINAL POSITION CAVITY WITHOUT A NUMBER INDICATES OPEN TERMINAL POSITION	STATUS	COMMENTS	INTEGRAL COMPONENTS SOLD SEPARATELY DRESS COVER
MX123 CONN ASSY 73 CKT BLK OPT9 KEY A/41	345666583	C-HSG-A9	G-CAP-9-P	TPA-A9	RS	LS	MAL	CPA	MSEAL	RSEAL	72 71 - - 68 67 66 65 64 - - - - 59 - - - - - - - - - - 48 47 46 45 - - - - - - 38 - - 35 - 33 - - - 31 30 - - - - 25 24 23 22 21 20 - - 17 - - - - - - - 9 8 7 6 5 4 - 2 1	SALEABLE		345650003
MX123 CONN ASSY 73 CKT BLU OPT0 KEY C/37	345666593	C-HSG-C0	G-CAP-0-P	TPA-C0	RS	LS	MAL	CPA	MSEAL	RSEAL	72 71 70 - 68 - 66 65 - 63 - 61 - 59 58 - 56 - - 53 - - - 49 - 47 - - - 43 - 41 40 39 38 - 36 - - - - 31 30 29 - - - 25 24 23 22 21 - - - - - - - - - - - - 8 7 6 5 4 3 2 1	SALEABLE		345650003
MX123 CONN ASSY 73 CKT BLK OPT0 KEY A/50	345666613	C-HSG-A0	G-CAP-0-P	TPA-A0	RS	LS	MAL	CPA	MSEAL	RSEAL	- - - - 68 67 - 65 - - 62 - - 59 58 - - 55 - - - - - - 48 47 - - - - 42 41 - - - - - 35 - - - - - - - - 27 - - 24 - - - 20 19 18 17 - - - - - - 11 10 - 8 - - - 4 3 - -	SALEABLE		345650003
MX123 CONN ASSY 73 CKT GRY OPT9 KEY B/25	345666623	C-HSG-B9	G-CAP-9-P	TPA-B9	RS	LS	MAL	CPA	MSEAL	RSEAL	72 71 70 69 - - 66 65 - 63 62 61 60 - - 57 56 55 - 53 52 51 50 49 48 47 - - 44 43 42 41 40 - - 37 36 35 34 33 - 31 - - - - 26 25 24 - - 21 20 19 18 - 16 - 14 - 12 - - 9 8 7 - 5 4 3 2 -	SALEABLE		345650003
MX123 CONN ASSY 73 CKT BLU OPT9 KEY C/33	345666633	C-HSG-C9	G-CAP-9-P	TPA-C9	RS	LS	MAL	CPA	MSEAL	RSEAL	72 71 70 - 68 - - 65 - 63 - 61 - 59 58 - 56 55 - 53 - - - 49 - 47 - - - 43 - 41 40 39 38 - 36 35 - - 32 31 30 29 - - - 25 24 23 22 21 20 19 18 17 - - - - - - - - - - 6 5 4 3 2 1	SALEABLE		345650003
MX123 CONN ASSY 73 CKT BLU OPT9 KEY C/37	345666643	C-HSG-C9	G-CAP-9-P	TPA-C9	RS	LS	MAL	CPA	MSEAL	RSEAL	72 - 70 69 - - 66 - - - 62 - - 59 - - 56 55 - 53 - - - 49 - 47 46 - 44 - 42 - 40 39 - - 36 35 - - 32 31 30 29 - - 26 - 24 23 22 21 20 19 - 17 - - - - - - - - - - 6 5 4 3 2 1	SALEABLE		345650003
MX123 CONN ASSY 73 CKT GRY OPT9 KEY B/30	345666653	C-HSG-B9	G-CAP-9-P	TPA-B9	RS	LS	MAL	CPA	MSEAL	RSEAL	- 71 70 69 - 67 66 65 64 63 - - - - 58 57 56 - 54 53 - 51 50 49 - - - 45 - - 42 - - 39 - - - - 34 33 32 31 - 29 28 27 26 25 24 23 22 21 - - - 17 - 15 - 13 12 11 10 9 - 7 6 - - 3 2 -	SALEABLE		345650003
MX123 CONN ASSY 73 CKT BLK OPT9 KEY A/51	345666663	C-HSG-A9	G-CAP-9-P	TPA-A9	RS	LS	MAL	CPA	MSEAL	RSEAL	- - - - - 67 - - - - 62 61 - 59 58 - - 55 - 53 - - - - - 47 - - - - - 41 - - - - - 35 - 33 - - - - - 27 - - 24 - - - - 19 18 17 16 - - - - 11 10 - 8 - - - - 3 - 1	SALEABLE		345650003
MX123 CONN ASSY 73 CKT GRY OPT9 KEY B/65	345666673	C-HSG-B9	G-CAP-9-P	TPA-B9	RS	LS	MAL	CPA	MSEAL	RSEAL	- - - - - - - - - - 62 - - - 58 - - - 54 53 - - - - - - - - - - 42 - - - - - - - - - - - - - - 27 - 25 - - - - - - - - - - - - - - 10 - - - - - - - - -	SALEABLE		345650003
MX123 CONN ASSY 73 CKT BLK OPT9 KEY A/37	345666683	C-HSG-A9	G-CAP-9-P	TPA-A9	RS	LS	MAL	CPA	MSEAL	RSEAL	- 71 - 69 68 - 66 65 64 - 62 61 - - - - 56 55 54 53 - 51 50 49 - - - 45 44 - - 41 - - - - 36 35 34 33 - - - - - - 26 25 24 23 - - 20 19 18 17 - - - - - - 10 - 8 7 - 5 4 3 - -	SALEABLE		345650003
MX123 CONN ASSY 73 CKT BLU OPT9 KEY C/43	345666693	C-HSG-C9	G-CAP-9-P	TPA-C9	RS	LS	MAL	CPA	MSEAL	RSEAL	- - - - 68 - - - - 63 62 61 60 59 58 57 - 55 - 53 - - - - 48 - - - - 43 42 41 40 - - 37 36 35 - 33 32 - - - - 27 - - - - - - - 20 19 18 - - - - - - 11 10 - - - - - 4 3 2 1	SALEABLE		345650003
MX123 CONN ASSY 73 CKT BLK OPT9 KEY A/54	345666713	C-HSG-A9	G-CAP-9-P	TPA-A9	RS	LS	MAL	CPA	MSEAL	RSEAL	- - - - - 67 - - - - 62 - - 59 58 - - 55 - - - - - - - 47 - - - - - - - - - - 35 - - - - - - 27 - - 24 - - - 20 19 18 17 16 - - - - 11 10 - 8 - - - 4 3 - -	SALEABLE		345650003

molex

MX123 SEALED RCPT ASSY (73 Ckt)
BOM & PIN OUT SHEET

ASSEMBLY DESCRIPTION	ASSEMBLY PART NUMBER	CONNECTOR HOUSING	GROMMET CAP	TPA	RIGHT SLIDE	LEFT SLIDE	MATE ASSIST LEVER	CPA	MAT SEAL	RING SEAL	BLOCKED TERMINALS CAVITY WITH A NUMBER INDICATES BLOCKED TERMINAL POSITION CAVITY WITHOUT A NUMBER INDICATES OPEN TERMINAL POSITION	STATUS	COMMENTS	INTEGRAL COMPONENTS SOLD SEPARATELY DRESS COVER
MX123 CONN ASSY 73 CKT BLU OPT9 KEY C/35	345666743	C-HSG-C9	G-CAP-9-P	TPA-C9	RS	LS	MAL	CPA	MSEAL	RSEAL	72 - 70 - - - 66 - - - 62 - - 59 58 - 56 55 54 53 - - - 49 - 47 - - 44 - 42 - 40 39 38 - 36 35 - - - 32 31 30 29 - - 26 - 24 23 22 21 20 19 18 17 - - - - - - - - - - 6 5 4 3 2 1	SALEABLE		345650003
MX123 CONN ASSY 73 CKT BLK OPT9 KEY A/49	345666753	C-HSG-A9	G-CAP-9-P	TPA-A9	RS	LS	MAL	CPA	MSEAL	RSEAL	- - - - - 67 - - - 63 62 - - 59 58 - - 55 - - - - - - - 47 - - - - - 41 - - - - - 35 - - - 32 - - - - 27 26 25 24 - - - - 19 18 17 16 - - - - 11 10 9 8 - - - - 3 - 1	SALEABLE		345650003
MX123 CONN ASSY 73 CKT GRY OPT9 KEY B/26	345666763	C-HSG-B9	G-CAP-9-P	TPA-B9	RS	LS	MAL	CPA	MSEAL	RSEAL	- 71 70 69 - 67 66 65 64 63 - - 60 59 58 57 56 - 54 53 - 51 - - 48 47 - - 44 - 42 41 - 39 38 37 36 35 - 33 - 32 31 30 - 28 27 26 25 24 23 - - - - - 17 - 15 - 13 12 11 10 9 - 7 - - - 3 2 1	SALEABLE		345650003
MX123 CONN ASSY 73 CKT BLU OPT0 KEY C/40	345666773	C-HSG-C0	G-CAP-0-P	TPA-C0	RS	LS	MAL	CPA	MSEAL	RSEAL	- 71 - 69 - 67 - 65 64 - - 61 60 - - - 56 55 54 - - - 50 - - - - 45 - 43 - 41 - - 38 37 36 35 - - - - 31 - 29 28 27 - - 24 23 - - 20 - - - 16 - - 13 12 11 - - 8 7 - - - 3 2 -	SALEABLE		345650003
MX123 CONN ASSY 73 CKT GRY OPT0 KEY B/37	345666783	C-HSG-B0	G-CAP-0-P	TPA-B0	RS	LS	MAL	CPA	MSEAL	RSEAL	- 71 - 69 - 67 - 65 64 63 62 61 - - 58 57 56 - - - - 51 - 49 - 47 - 45 44 - 42 41 - - 38 37 36 - - - - - - - - - - - - - - 22 21 20 19 18 - - 15 14 13 12 11 - 9 - - 6 5 4 3 - -	SALEABLE		345650003
MX123 CONN ASSY 73 CKT GRY OPT0 KEY B/42	345666793	C-HSG-B0	G-CAP-0-P	TPA-B0	RS	LS	MAL	CPA	MSEAL	RSEAL	- 71 - 69 - 67 - 65 - - 62 61 - - 58 57 56 - - - - 51 - 49 - 47 - 45 44 - 42 41 - - 38 37 36 - - - - - - - - - - - - - - 22 21 - 19 18 - - 15 14 13 12 11 - 9 - - 6 - - 3 - -	SALEABLE		345650003
MX123 CONN ASSY 73 CKT GRY OPT0 KEY B/55	345666803	C-HSG-B0	G-CAP-0-P	TPA-B0	RS	LS	MAL	CPA	MSEAL	RSEAL	72 71 70 69 68 67 66 - 64 63 62 61 60 - 58 - 56 - 54 - 52 51 50 - - 47 - 45 - 43 42 41 40 - 38 - 36 - 34 - - 32 31 30 - - 27 26 25 24 - 22 - 20 19 18 17 16 15 14 13 12 11 10 9 8 - 6 5 4 3 2 1	SALEABLE		345650003
MX123 CONN ASSY 73 CKT BLK OPT9 KEY A/55	345666813	C-HSG-A9	G-CAP-9-P	TPA-A9	RS	LS	MAL	CPA	MSEAL	RSEAL	72 - - - - - 66 - - - - - - 59 - - - - - - - - - - - - 46 - - - - - - - 38 - - 35 - 33 - - 31 - - - - - - - 23 22 - 20 19 - 17 - - - - - - - - - 7 6 - 4 - 2 1	SALEABLE		345650003
MX123 CONN ASSY 73 CKT BLU OPT9 KEY C/45	345666823	C-HSG-C9	G-CAP-9-P	TPA-C9	RS	LS	MAL	CPA	MSEAL	RSEAL	- 71 - 69 - - - 65 64 - - 61 60 - 58 - 56 55 54 - - - 50 - - - - 45 - 43 42 - - - 38 - - - - - - - 31 - 29 28 - - - - 23 - - - 19 18 17 16 - - - 12 11 - - - 7 - - - 3 - 1	SALEABLE		345650003
MX123 CONN ASSY 73 CKT BLK OPT0 KEY A/36	345666833	C-HSG-A0	G-CAP-0-P	TPA-A0	RS	LS	MAL	CPA	MSEAL	RSEAL	72 71 - - 68 67 66 65 64 - 62 61 - - - - - - - - - - 50 - - - 46 45 - - - - - 39 38 - - 35 - - - - 31 30 29 - 27 - 25 24 23 22 21 20 - - 17 - - 14 13 - 11 - 9 8 7 6 5 4 - 2 1	SALEABLE		345650003
MX123 CONN ASSY 73 CKT BLK OPT0 KEY A/54	345666843	C-HSG-A0	G-CAP-0-P	TPA-A0	RS	LS	MAL	CPA	MSEAL	RSEAL	- - - - - 67 - - - - 62 - - 59 58 - - 55 - - - - - - - 47 - - - - 42 41 - - - - - 35 - - - - - - - - 27 - - 24 - - - - 19 18 - 16 - - - - 11 10 - 8 - - - - 3 - 1	SALEABLE		345650003
MX123 CONN ASSY 73 CKT BLU OPT0 KEY C/43	345666853	C-HSG-C0	G-CAP-0-P	TPA-C0	RS	LS	MAL	CPA	MSEAL	RSEAL	72 71 70 - 68 - - 65 - 63 - - - 59 58 - 56 - - 53 - - - - - 47 - - - 43 - - 40 39 38 - 36 - - - - - 31 30 29 - - - - 24 23 22 21 20 - - - - - - - - - - - - - 6 5 4 3 2 1	SALEABLE		345650003

molex

MX123 SEALED RCPT ASSY (73 Ckt)
BOM & PIN OUT SHEET

ASSEMBLY DESCRIPTION	ASSEMBLY PART NUMBER	CONNECTOR HOUSING	GROMMET CAP	TPA	RIGHT SLIDE	LEFT SLIDE	MATE ASSIST LEVER	CPA	MAT SEAL	RING SEAL	BLOCKED TERMINALS CAVITY WITH A NUMBER INDICATES BLOCKED TERMINAL POSITION CAVITY WITHOUT A NUMBER INDICATES OPEN TERMINAL POSITION	STATUS	COMMENTS	INTEGRAL COMPONENTS SOLD SEPARATELY DRESS COVER
MX123 CONN ASSY 73 CKT BLK OPT0 KEY A/54	345666863	C-HSG-A0	G-CAP-0-P	TPA-A0	RS	LS	MAL	CPA	MSEAL	RSEAL	- - - - - 67 - - - - 62 - - 59 58 - - 55 - - - - - - - 47 - - - - - 41 - - - - - 35 - - - - - - - - - - - 27 - - 24 - - - - 19 18 17 16 - - - - 11 10 - 8 - - - - 3 - 1	SALEABLE		345650003
MX123 CONN ASSY 73 CKT GRY OPT9 KEY B/36	345666873	C-HSG-B9	G-CAP-9-P	TPA-B9	RS	LS	MAL	CPA	MSEAL	RSEAL	- 71 70 69 - - 66 65 64 - - - - - 58 57 56 - 54 - - 51 50 49 - - - 45 - - 42 - - 39 - - - - 34 33 32 31 - 29 28 - 26 25 24 23 22 21 - - - - - - - 13 12 - 10 9 - 7 6 5 - 3 2 -	SALEABLE		345650003
MX123 CONN ASSY 73 CKT BLK OPT9 KEY A/37	345666883	C-HSG-A9	G-CAP-9-P	TPA-A9	RS	LS	MAL	CPA	MSEAL	RSEAL	- 71 - 69 68 - 66 65 64 - 62 61 - - - - - - 54 53 - - 50 49 - - - 45 44 - - 41 - - - - - - 34 33 32 31 30 29 - - 26 25 24 23 - - 20 19 - - 16 15 14 13 - - 10 - 8 - 6 - 4 3 - -	SALEABLE		345650003
MX123 CONN ASSY 73 CKT GRY OPT0 KEY B/66	345666893	C-HSG-B0	G-CAP-0-P	TPA-B0	RS	LS	MAL	CPA	MSEAL	RSEAL	- - - - - - - - - - - - - - - 58 - - - 54 53 - - - - - - - - - - 42 - - - - - - - - - - - - - - - 27 - 25 - - - - - - - - - - - - - - 10 - - - - - - - - -	SALEABLE		345650003
MX123 CONN ASSY 73 CKT GRY OPT0 KEY B/55	345666903	C-HSG-B0	G-CAP-0-P	TPA-B0	RS	LS	MAL	CPA	MSEAL	RSEAL	72 71 70 69 68 67 66 65 - 63 62 61 60 - 58 - 56 - 54 - 52 51 50 - - 47 - 45 44 43 42 41 40 - 38 - 36 - 34 - - 31 30 - 28 27 26 25 24 - 22 - 20 19 - 17 16 15 14 13 12 11 10 9 8 - 6 5 4 3 2 1	SALEABLE		345650003
MX123 CONN ASSY 73 CKT BLK OPT9 KEY A/63	345666913	C-HSG-A9	G-CAP-9-P	TPA-A9	RS	LS	MAL	CPA	MSEAL	RSEAL	- - - - - - - - - - 62 61 - - - - - - - 53 - - - - - - - - - - - 41 - - - - - - - 33 - - - - - - - - - 24 - - - - 19 - - - - - - - - - - - 10 - 8 - - - - 3 - -	SALEABLE		345650003
MX123 CONN ASSY 73 CKT BLU OPT9 KEY C/56	345666923	C-HSG-C9	G-CAP-9-P	TPA-C9	RS	LS	MAL	CPA	MSEAL	RSEAL	- - - - 68 - - - - 63 62 - - 59 - - - 55 - 53 - - - - - - - - - 43 42 - 40 - - - 36 35 - - - - - - - - - - - - - - - - - 20 19 - - - - - - - - - - - - - - - - 4 3 2 1	SALEABLE		345650003
MX123 CONN ASSY 73 CKT GRY OPT9 KEY B/39	345666933	C-HSG-B9	G-CAP-9-P	TPA-B9	RS	LS	MAL	CPA	MSEAL	RSEAL	- 71 70 69 - - 66 65 64 - - - - - 58 57 56 - 54 - - 51 50 49 - - - 45 - - 42 - - 39 - - - - 34 33 32 31 - 29 28 - 26 25 24 23 - - - - - - - - - 13 12 - 10 9 - 7 - 5 - 3 2 -	SALEABLE		345650003
MX123 CONN ASSY 73 CKT BLK OPT9 KEY A/51	345666943	C-HSG-A9	G-CAP-9-P	TPA-A9	RS	LS	MAL	CPA	MSEAL	RSEAL	- - - - - 67 - - - - 62 - - 59 58 - - 55 - - - - - - - 47 - - - - - - - - - - - 35 - - - - - - - - - - 27 26 25 24 - - - 20 19 18 17 16 - - - - 11 10 9 8 - - - 4 3 - -	SALEABLE		345650003
MX123 CONN ASSY 73 CKT BLK OPT0 KEY A/52	345666953	C-HSG-A0	G-CAP-0-P	TPA-A0	RS	LS	MAL	CPA	MSEAL	RSEAL	- - - - 68 67 - 65 - - 62 - - 59 58 - - 55 - - - - - - 48 47 - - - - 42 41 - - - - - 35 - - - - - - - 27 - - 24 - - - - 19 18 17 - - - - - 11 10 - 8 - - - - 3 - -	SALEABLE		345650003
MX123 CONN ASSY 73 CKT GRY OPT0 KEY B/24	345666963	C-HSG-B0	G-CAP-0-P	TPA-B0	RS	LS	MAL	CPA	MSEAL	RSEAL	- 71 - 69 - - 66 65 64 63 - - 60 59 58 57 56 - 54 53 - 51 50 49 - - - 45 44 - 42 41 - 39 38 37 36 35 34 33 32 31 - 29 28 27 26 25 24 23 22 21 - - - 17 - - - 13 12 11 10 9 - 7 6 5 - 3 - 1	SALEABLE		345650003
MX123 CONN ASSY 73 CKT BLU OPT0 KEY C/46	345666973	C-HSG-C0	G-CAP-0-P	TPA-C0	RS	LS	MAL	CPA	MSEAL	RSEAL	72 - - - 68 - 66 - - 63 - - - 59 58 - 56 - - 53 - - - - - - - - - 43 - - 40 39 38 - 36 - - - - 31 30 29 - - - - 24 23 22 21 20 - - - - - - - - - - - - - - - 6 5 4 3 2 1	SALEABLE		345650003

molex

MX123 SEALED RCPT ASSY (73 Ckt)
BOM & PIN OUT SHEET

ASSEMBLY DESCRIPTION	ASSEMBLY PART NUMBER	CONNECTOR HOUSING	GROMMET CAP	TPA	RIGHT SLIDE	LEFT SLIDE	MATE ASSIST LEVER	CPA	MAT SEAL	RING SEAL	BLOCKED TERMINALS CAVITY WITH A NUMBER INDICATES BLOCKED TERMINAL POSITION CAVITY WITHOUT A NUMBER INDICATES OPEN TERMINAL POSITION	STATUS	COMMENTS	INTEGRAL COMPONENTS SOLD SEPARATELY DRESS COVER
MX123 CONN ASSY 73 CKT BLU OPT0 KEY C/36	345666983	C-HSG-C0	G-CAP-0-P	TPA-C0	RS	LS	MAL	CPA	MSEAL	RSEAL	72 - 70 - 68 - 66 - - 63 - 61 - 59 58 - 56 55 - 53 - - - 49 - - - - - 43 - 41 40 39 38 - 36 35 - - - 32 31 30 29 - - - 25 24 23 22 21 20 19 - 17 - - - - - - - - - - 6 5 4 3 2 1	SALEABLE		345650003
MX123 CONN ASSY 73 CKT GRY OPT0 KEY B/43	345667003	C-HSG-B0	G-CAP-0-P	TPA-B0	RS	LS	MAL	CPA	MSEAL	RSEAL	72 71 70 69 68 - - 65 64 63 62 61 60 - 58 - - - 54 - 52 51 - - - - 46 45 44 43 42 41 40 - 38 - - - 34 - - 32 31 30 - 28 27 26 25 24 - 22 - 20 19 - - 16 - 14 - - 11 10 9 - - - - - - 2 1	SALEABLE		345650003
MX123 CONN ASSY 73 CKT BLK OPT9 KEY A/44	345667013	C-HSG-A9	G-CAP-9-P	TPA-A9	RS	LS	MAL	CPA	MSEAL	RSEAL	72 - - - 68 67 66 65 - - - - - - - - - - - - - - - - 48 47 46 - - - - - 40 - 38 - - 35 - 33 - - 31 30 - - - - 25 24 23 22 21 20 - - 17 - - - - - - - - 9 8 7 6 5 4 - 2 1	SALEABLE		345650003
MX123 CONN ASSY 73 CKT BLK OPT0 KEY A/51	345667023	C-HSG-A0	G-CAP-0-P	TPA-A0	RS	LS	MAL	CPA	MSEAL	RSEAL	- - - - - 67 - - - 63 62 - - 59 58 - - 55 - - - - - - - 47 - - - - 42 41 - - - - - 35 - - - 32 - - - - 27 - - 24 - - - - 19 18 17 16 - - - - 11 10 - 8 - - - - 3 - 1	SALEABLE		345650003
MX123 CONN ASSY 73 CKT BLK OPT0 KEY A/41	345667033	C-HSG-A0	G-CAP-0-P	TPA-A0	RS	LS	MAL	CPA	MSEAL	RSEAL	72 71 - - 68 67 66 - 64 - - - - 59 - - - - - - - - 50 - 48 47 46 45 - - - - 40 39 38 - - 35 - 33 - - 31 30 - - - - 25 24 23 22 - 20 - - 17 - - - 14 - - - - 9 - 7 6 - 4 - 2 1	SALEABLE		345650003
MX123 CONN ASSY 73 CKT GRY OPT0 KEY B/24	345667043	C-HSG-B0	G-CAP-0-P	TPA-B0	RS	LS	MAL	CPA	MSEAL	RSEAL	- 71 70 69 - - 66 65 64 - - - - - 58 57 56 - 54 53 - 51 50 49 48 47 - 45 44 - 42 - - 39 38 37 36 35 34 33 - 32 31 30 29 28 - 26 25 24 23 22 21 - - - 17 - 15 - 13 12 - 10 9 - 7 6 5 - 3 2 1	SALEABLE		345650003
MX123 CONN ASSY 73 CKT BLU OPT0 KEY C/39	345667053	C-HSG-C0	G-CAP-0-P	TPA-C0	RS	LS	MAL	CPA	MSEAL	RSEAL	72 - 70 - 68 - 66 - - 63 - - - 59 58 - 56 55 - 53 - - - - - - - - - 43 - - 40 39 38 - 36 35 - - - 32 31 30 29 - - - 24 23 22 21 20 19 18 17 - - - - - - - - - - 6 5 4 3 2 1	SALEABLE		345650003
MX123 CONN ASSY 73 CKT BLU OPT0 KEY C/35	345667063	C-HSG-C0	G-CAP-0-P	TPA-C0	RS	LS	MAL	CPA	MSEAL	RSEAL	- 71 - 69 - - - 65 64 - - 61 60 - 58 - 56 55 54 - - - 50 49 - - - 45 - 43 42 41 - - 38 37 36 35 - - - - 31 - 29 28 27 - - 24 23 - - 20 19 18 17 16 - - - 12 11 - - 8 7 - - - 3 2 1	SALEABLE		345650003
MX123 CONN ASSY 73 CKT NAT OPT9 KEY F/17	345667073	C-HSG-F9	G-CAP-9-P	TPA-F9	RS	LS	MAL	CPA	MSEAL	RSEAL	72 71 70 - - 67 66 65 64 63 62 61 60 59 - - 56 55 54 53 52 51 50 49 48 47 46 45 44 - - 41 40 39 - - 36 35 34 - - 32 31 - 29 28 27 26 25 24 23 22 21 20 - - - 16 15 14 13 12 11 10 9 8 7 6 5 4 - - -	SALEABLE		345650003
MX123 CONN ASSY 73 CKT GRY OPT9 KEY B/13	345667083	C-HSG-B9	G-CAP-9-P	TPA-B9	RS	LS	MAL	CPA	MSEAL	RSEAL	72 71 70 69 68 67 66 65 64 63 62 61 60 59 58 57 56 55 54 53 52 51 50 49 48 47 46 45 44 43 42 41 40 39 38 37 36 35 34 33 - 32 31 30 29 28 27 26 25 24 23 22 21 20 19 18 17 - - - - - - - 9 - - 6 5 4 - - -	SALEABLE		345650003
MX123 CONN ASSY 73 CKT GRY OPT9 KEY B/49	345667093	C-HSG-B9	G-CAP-9-P	TPA-B9	RS	LS	MAL	CPA	MSEAL	RSEAL	- - - - - - - - - - 62 61 60 - 58 57 56 55 54 - - - - - - - - - - - 42 41 40 - 38 37 36 35 - - - - - - - - - - - - 22 21 20 19 18 - - - - - - - - 9 - - 6 5 4 - - -	SALEABLE		345650003
MX123 CONN ASSY 73 CKT BLK OPT0 KEY A/25	345667103	C-HSG-A0	G-CAP-0-P	TPA-A0	RS	LS	MAL	CPA	MSEAL	RSEAL	- - - - - - - 65 - - - 61 - - 58 57 56 - - - - 51 50 - - 47 46 45 - - - 41 - - 38 37 36 - - - - 31 30 - - - 26 25 - - 22 21 20 - - - - 15 14 - - - 10 - - - - - - - - -	SALEABLE		345650003

molex

MX123 SEALED RCPT ASSY (73 Ckt)
BOM & PIN OUT SHEET

ASSEMBLY DESCRIPTION	ASSEMBLY PART NUMBER	CONNECTOR HOUSING	GROMMET CAP	TPA	RIGHT SLIDE	LEFT SLIDE	MATE ASSIST LEVER	CPA	MAT SEAL	RING SEAL	BLOCKED TERMINALS CAVITY WITH A NUMBER INDICATES BLOCKED TERMINAL POSITION CAVITY WITHOUT A NUMBER INDICATES OPEN TERMINAL POSITION	STATUS	COMMENTS	INTEGRAL COMPONENTS SOLD SEPARATELY DRESS COVER
MX123 CONN ASSY 73 CKT GRY OPT9 KEY B/8	345667133	C-HSG-B9	G-CAP-9-P	TPA-B9	RS	LS	MAL	CPA	MSEAL	RSEAL	72 71 70 69 68 67 66 65 64 63 62 61 60 59 - 57 56 55 - - 52 51 50 49 48 47 46 45 44 43 - 41 40 39 38 37 36 35 34 33 - 32 31 30 29 28 - 26 - 24 23 22 21 20 19 18 17 - 16 15 14 13 12 11 - 9 8 7 6 5 4 3 2 1	SALEABLE		345650003
MX123 CONN ASSY 73 CKT BLK OPT0 KEY A/35	345667143	C-HSG-A0	G-CAP-0-P	TPA-A0	RS	LS	MAL	CPA	MSEAL	RSEAL	72 71 - - 68 67 66 65 64 - 62 61 - - - - - - - - - - 50 - - - 46 45 - - - - 40 39 38 - - 35 - - - - 31 30 29 - 27 - 25 24 23 22 21 20 - - 17 - - - 14 13 - 11 - 9 8 7 6 5 4 - 2 1	SALEABLE		345650003
MX123 CONN ASSY 73 CKT BLU OPT0 KEY C/45	345667153	C-HSG-C0	G-CAP-0-P	TPA-C0	RS	LS	MAL	CPA	MSEAL	RSEAL	- 71 - 69 - 67 - 65 64 - - 61 60 - - - 56 55 54 - - - 50 - - - - 45 - 43 - 41 - - 38 - - 35 - - - 31 - 29 28 27 - - - 23 - - 20 - - - - 16 - - 13 12 11 - - - 7 - - - 3 - -	SALEABLE		345650003
MX123 CONN ASSY 73 CKT BLK OPT0 KEY A/45	345667163	C-HSG-A0	G-CAP-0-P	TPA-A0	RS	LS	MAL	CPA	MSEAL	RSEAL	- 71 - - - - 66 65 64 63 62 - - 59 58 57 - - - - - 51 - - - - 46 - - - 42 - - 39 38 37 36 - - - - 32 31 30 - - 27 26 - - 23 22 21 - - - - - - - 14 13 12 - 10 - - - - - - - - -	SALEABLE		345650003
MX123 CONN ASSY 73 CKT GRY OPT0 KEY B/23	345667173	C-HSG-B0	G-CAP-0-P	TPA-B0	RS	LS	MAL	CPA	MSEAL	RSEAL	72 71 70 69 - - - - - - 62 61 60 59 - 57 56 - 54 53 52 51 50 49 48 47 - - 44 - 42 41 40 39 - 37 36 35 - 33 - 31 - - - - 26 25 24 23 - 21 20 19 18 - - 15 14 13 12 11 - 9 8 7 6 5 4 3 2 1	SALEABLE		345650003
MX123 CONN ASSY 73 CKT GRY OPT0 KEY B/72	345667183	C-HSG-B0	G-CAP-0-P	TPA-B0	RS	LS	MAL	CPA	MSEAL	RSEAL	- 23 -	SALEABLE		345650003
MX123 CONN ASSY 73 CKT BLK OPT0 KEY A/41	345667193	C-HSG-A0	G-CAP-0-P	TPA-A0	RS	LS	MAL	CPA	MSEAL	RSEAL	- 71 - - 68 67 66 65 64 - - - - 59 - - - - - - - - 50 - 48 47 46 45 - - - - 40 39 38 - - 35 - 33 - - 31 30 - - - - 25 24 23 22 21 20 - - - - - - 14 - - - - 9 8 7 6 5 4 - - -	SALEABLE		345650003
MX123 CONN ASSY 73 CKT GRY OPT0 KEY B/25	345667203	C-HSG-B0	G-CAP-0-P	TPA-B0	RS	LS	MAL	CPA	MSEAL	RSEAL	- - - - - - - - - - - 61 - - 58 57 56 - - - - 51 50 - - 47 46 45 - - - 41 40 - 38 37 36 - - - - 31 30 - 28 - 26 25 - - 22 21 - - - - - 15 14 - - - 10 - - - - - - - - - -	SALEABLE		345650003
MX123 CONN ASSY 73 CKT BLK OPT0 KEY A/30	345667213	C-HSG-A0	G-CAP-0-P	TPA-A0	RS	LS	MAL	CPA	MSEAL	RSEAL	72 71 - - 68 67 66 65 64 - 62 61 60 59 - 57 - 55 - 53 - - 50 - 48 - 46 45 - - - - 40 - 38 37 - 35 - 33 - 31 30 29 - 27 - 25 24 23 22 21 20 - - - - 15 14 13 - 11 - 9 8 7 6 5 4 - - -	SALEABLE		345650003
MX123 CONN ASSY 73 CKT BLU OPT0 KEY C/41	345667223	C-HSG-C0	G-CAP-0-P	TPA-C0	RS	LS	MAL	CPA	MSEAL	RSEAL	- 71 - 69 - 67 - 65 64 - - 61 60 - 58 - 56 55 54 - - - 50 49 - - - 45 - 43 - 41 - - 38 - - 35 - - - 31 - 29 28 27 - - - 23 - - - 19 18 17 16 - - - 12 11 - - - 7 - - - 3 - 1	SALEABLE		345650003
MX123 CONN ASSY 73 CKT BLK OPT9 KEY A/29	345667233	C-HSG-A9	G-CAP-9-P	TPA-A9	RS	LS	MAL	CPA	MSEAL	RSEAL	- 71 70 69 68 67 66 65 64 63 - - 60 59 58 - - - - 53 - - 50 49 48 47 - - 44 - 42 41 - 39 38 - 36 - - 33 - 31 - - 28 27 26 - 24 23 22 21 - 19 18 17 - - 14 - 12 - - - 8 7 6 5 - 3 2 1	SALEABLE		345650003
MX123 CONN ASSY 73 CKT BLK OPT9 KEY A/33	345667243	C-HSG-A9	G-CAP-9-P	TPA-A9	RS	LS	MAL	CPA	MSEAL	RSEAL	- 71 70 69 68 67 66 65 64 63 - - 60 59 - - - - - 53 - - 50 49 - 47 - - 44 - 42 - - 39 38 - 36 - - 33 - 31 - - 28 27 26 - 24 23 22 21 - 19 18 17 - - 14 - 12 - - - 8 7 6 5 - - 2 1	SALEABLE		345650003

molex

MX123 SEALED RCPT ASSY (73 Ckt)
BOM & PIN OUT SHEET

ASSEMBLY DESCRIPTION	ASSEMBLY PART NUMBER	CONNECTOR HOUSING	GROMMET CAP	TPA	RIGHT SLIDE	LEFT SLIDE	MATE ASSIST LEVER	CPA	MAT SEAL	RING SEAL	BLOCKED TERMINALS CAVITY WITH A NUMBER INDICATES BLOCKED TERMINAL POSITION CAVITY WITHOUT A NUMBER INDICATES OPEN TERMINAL POSITION	STATUS	COMMENTS	INTEGRAL COMPONENTS SOLD SEPARATELY DRESS COVER
MX123 CONN ASSY 73 CKT GRY OPT0 KEY B/19	345667253	C-HSG-B0	G-CAP-0-P	TPA-B0	RS	LS	MAL	CPA	MSEAL	RSEAL	- 71 70 69 68 67 66 65 64 63 - - 60 59 58 57 56 55 54 53 - 51 50 49 - - - 45 - - 42 - - 39 38 37 36 35 34 33 - 32 31 - 29 28 27 26 25 24 23 22 21 - - - 17 - 15 - 13 12 11 10 9 8 7 6 5 - 3 2 1	SALEABLE		345650003
MX123 CONN ASSY 73 CKT BLU OPT0 KEY C/34	345667263	C-HSG-C0	G-CAP-0-P	TPA-C0	RS	LS	MAL	CPA	MSEAL	RSEAL	72 71 70 - 68 - - 65 - 63 - 61 - 59 58 - 56 55 - 53 - - - 49 - 47 - - - 43 - 41 40 39 38 - 36 35 - - - 32 31 30 29 - - - 25 24 23 22 21 20 19 - 17 - - - - - - - - - - 6 5 4 3 2 1	SALEABLE		345650003
MX123 CONN ASSY 73 CKT BLU OPT0 KEY C/39	345667273	C-HSG-C0	G-CAP-0-P	TPA-C0	RS	LS	MAL	CPA	MSEAL	RSEAL	72 71 70 - 68 - - 65 - 63 - 61 - 59 58 - 56 - - 53 - - - 49 - 47 - - - 43 - 41 40 39 38 - 36 - - - - 31 30 29 - - - 25 24 23 22 21 20 - - - - - - - - - - - - - 6 5 4 3 2 1	SALEABLE		345650003
MX123 CONN ASSY 73 CKT BLU OPT0 KEY C/35	345667283	C-HSG-C0	G-CAP-0-P	TPA-C0	RS	LS	MAL	CPA	MSEAL	RSEAL	72 71 70 - 68 - - 65 - 63 62 - - 59 58 - 56 55 - 53 - - - - - 47 - - - 43 42 - 40 39 38 - 36 35 - - - 32 31 30 29 - - 26 - 24 23 22 21 20 19 - 17 - - - - - - - - - - 6 5 4 3 2 1	SALEABLE		345650003
MX123 CONN ASSY 73 CKT BLK OPT9 KEY A/49	345667293	C-HSG-A9	G-CAP-9-P	TPA-A9	RS	LS	MAL	CPA	MSEAL	RSEAL	- - - - - - - - - - 62 61 60 - 58 57 56 55 54 - - - - - - - - - - - 42 41 40 - 38 37 36 35 - - - - - - - - - - - - - - - 22 21 20 19 18 - - - - - - - - - 9 - - 6 5 4 - - -	SALEABLE		345650003
MX123 CONN ASSY 73 CKT GRY OPT0 KEY B/49	345667303	C-HSG-B0	G-CAP-0-P	TPA-B0	RS	LS	MAL	CPA	MSEAL	RSEAL	72 71 70 - - 67 - 65 64 63 62 61 60 - 58 57 56 - 54 - 52 51 50 - - 47 - 45 - 43 42 41 40 - 38 - 36 - 34 - - 32 31 30 - - 27 26 25 24 - 22 - 20 19 - - - 16 15 14 13 - - - 9 8 - 6 5 4 3 2 1	SALEABLE		345650003
MX123 CONN ASSY 73 CKT GRY OPT0 KEY B/22	345667313	C-HSG-B0	G-CAP-0-P	TPA-B0	RS	LS	MAL	CPA	MSEAL	RSEAL	- 71 70 69 68 - 66 65 64 63 - - 60 59 58 57 56 - 54 53 - 51 50 49 - - - 45 44 - 42 41 - 39 38 37 36 35 34 33 - 32 31 - 29 28 27 26 25 24 23 - - - - - 17 - 15 - 13 12 11 10 9 8 7 - 5 - 3 2 1	SALEABLE		345650003
MX123 CONN ASSY 73 CKT GRY OPT9 KEY B/66	345667333	C-HSG-B9	G-CAP-9-P	TPA-B9	RS	LS	MAL	CPA	MSEAL	RSEAL	- - - - - - - - - - - - - - 58 - - - 54 53 - - - - - - - - - - 42 - - - - - - - - - - - - - - 27 - 25 - - - - - - - - - - - - - - 10 - - - - - - - - -	SALEABLE		345650003
MX123 CONN ASSY 73 CKT GRY OPT9 KEY B/33	345667343	C-HSG-B9	G-CAP-9-P	TPA-B9	RS	LS	MAL	CPA	MSEAL	RSEAL	72 71 70 69 - - 66 65 - - 62 61 60 - - 57 56 - - 53 52 51 50 49 48 47 - - - - 42 41 40 - - 37 36 - 34 33 - 31 - - - - 26 25 24 - - 21 20 - 18 - 16 - 14 - - 11 - - 8 7 - 5 - 3 2 -	SALEABLE		345650003
MX123 CONN ASSY 73 CKT BLU OPT9 KEY C/40	345667353	C-HSG-C9	G-CAP-9-P	TPA-C9	RS	LS	MAL	CPA	MSEAL	RSEAL	72 71 70 - 68 - - 65 - 63 - 61 - 59 58 - 56 - - 53 - - - 49 - - - - - 43 - 41 40 39 38 - 36 - - - - 31 30 29 - - - 25 24 23 22 21 20 - - - - - - - - - - - - - 6 5 4 3 2 1	SALEABLE		345650003
MX123 CONN ASSY 73 CKT GRY OPT0 KEY B/24	345667363	C-HSG-B0	G-CAP-0-P	TPA-B0	RS	LS	MAL	CPA	MSEAL	RSEAL	- 71 - 69 - 67 66 65 64 63 - - - - 58 57 56 - 54 53 - 51 50 49 48 47 - 45 - - 42 - - 39 38 37 36 35 34 33 - 32 31 30 29 28 27 26 25 24 23 22 21 - - - - - - - 13 12 11 10 9 - 7 6 5 - 3 2 1	SALEABLE		345650003
MX123 CONN ASSY 73 CKT BLK OPT0 KEY A/52	345667373	C-HSG-A0	G-CAP-0-P	TPA-A0	RS	LS	MAL	CPA	MSEAL	RSEAL	- - - - - 67 - - - 63 62 - - 59 58 - - 55 - - - - - - - 47 - - - - - 41 - - - - - 35 - - - 32 - - - - 27 - - 24 - - - - 19 18 17 - 16 - - - - 11 10 - 8 - - - - 3 - 1	SALEABLE		345650003

molex

MX123 SEALED RCPT ASSY (73 Ckt)
BOM & PIN OUT SHEET

ASSEMBLY DESCRIPTION	ASSEMBLY PART NUMBER	CONNECTOR HOUSING	GROMMET CAP	TPA	RIGHT SLIDE	LEFT SLIDE	MATE ASSIST LEVER	CPA	MAT SEAL	RING SEAL	BLOCKED TERMINALS CAVITY WITH A NUMBER INDICATES BLOCKED TERMINAL POSITION CAVITY WITHOUT A NUMBER INDICATES OPEN TERMINAL POSITION	STATUS	COMMENTS	INTEGRAL COMPONENTS SOLD SEPARATELY DRESS COVER
MX123 CONN ASSY 73 CKT BLU OPT0 KEY C/38	345667383	C-HSG-C0	G-CAP-0-P	TPA-C0	RS	LS	MAL	CPA	MSEAL	RSEAL	72 - - 69 68 - - - - 63 62 - - 59 58 - 56 55 - 53 - - - - - - 46 - - 43 42 - 40 39 38 - 36 35 - - - - 31 30 29 - - 26 - 24 23 22 21 20 19 18 - - - - - - - - - - - 6 5 4 3 2 1	SALEABLE		345650003
MX123 CONN ASSY 73 CKT GRY OPT0 KEY B/19	345667393	C-HSG-B0	G-CAP-0-P	TPA-B0	RS	LS	MAL	CPA	MSEAL	RSEAL	- 71 70 69 68 67 66 65 64 63 - - 60 59 58 57 56 - 54 53 - 51 50 49 - - - 45 - - 42 41 - 39 38 37 36 35 34 33 32 31 30 29 28 27 26 25 24 23 22 21 - - - 17 - - - 13 12 11 10 9 8 7 6 5 - 3 2 1	SALEABLE		345650003
MX123 CONN ASSY 73 CKT GRY OPT0 KEY B/52	345667403	C-HSG-B0	G-CAP-0-P	TPA-B0	RS	LS	MAL	CPA	MSEAL	RSEAL	72 71 70 69 68 67 66 65 64 63 62 61 60 - 58 - 56 - 54 - 52 51 - - - 47 - 45 44 43 42 41 40 - 38 - 36 - 34 - 32 31 30 - 28 27 26 25 24 - 22 - 20 19 18 17 16 - 14 13 12 11 10 9 8 - - - - - 2 1	SALEABLE		345650003
MX123 CONN ASSY 73 CKT BLK OPT0 KEY A/53	345667413	C-HSG-A0	G-CAP-0-P	TPA-A0	RS	LS	MAL	CPA	MSEAL	RSEAL	- - - - - 67 - - - - 62 - - 59 58 - - 55 - - 52 - - - - 47 - - - - - 41 - - - - - 35 - - - - - - - 27 - - 24 - - - - 19 18 17 16 - - - - 11 10 - 8 - - - - 3 - 1	SALEABLE		345650003
MX123 CONN ASSY 73 CKT BLU OPT0 KEY C/38	345667423	C-HSG-C0	G-CAP-0-P	TPA-C0	RS	LS	MAL	CPA	MSEAL	RSEAL	72 71 - - 68 - 66 65 - 63 62 - - 59 58 - 56 55 - 53 - - - - - - - - - 43 42 - 40 39 38 - 36 35 - - - 31 30 29 - - 26 - 24 23 22 21 20 19 - - - - - - - - - - - - 6 5 4 3 2 1	SALEABLE		345650003
MX123 CONN ASSY 73 CKT GRY OPT0 KEY B/31	345667433	C-HSG-B0	G-CAP-0-P	TPA-B0	RS	LS	MAL	CPA	MSEAL	RSEAL	- 71 70 69 - 67 66 65 64 63 - - - - 58 57 56 - 54 53 - 51 50 49 - - - 45 - - 42 - - 39 - - - - 34 33 32 31 - 29 28 27 26 25 24 23 22 21 - - - - - - - 13 12 11 10 9 - 7 6 5 - 3 2 -	SALEABLE		345650003
MX123 CONN ASSY 73 CKT BLK OPT0 KEY A/50	345667443	C-HSG-A0	G-CAP-0-P	TPA-A0	RS	LS	MAL	CPA	MSEAL	RSEAL	- - - - - 67 - - - - 62 61 - 59 58 - - 55 - 53 - - - - - 47 - - - - - 41 - - - - - 35 - 33 32 - - - - 27 - - 24 - - - - 19 18 17 16 - - - - 11 10 - 8 - - - - 3 - 1	SALEABLE		345650003
MX123 CONN ASSY 73 CKT BLU OPT0 KEY C/41	345667453	C-HSG-C0	G-CAP-0-P	TPA-C0	RS	LS	MAL	CPA	MSEAL	RSEAL	72 - - 69 68 - - - - 63 62 - - 59 - - 56 55 - 53 - - - - - - 46 - - 43 42 - 40 39 - - 36 35 - - - 31 30 29 - - 26 - 24 23 22 21 20 19 - - - - - - - - - - - - 6 5 4 3 2 1	SALEABLE		345650003
MX123 CONN ASSY 73 CKT GRY OPT0 KEY B/25	345667463	C-HSG-B0	G-CAP-0-P	TPA-B0	RS	LS	MAL	CPA	MSEAL	RSEAL	- 71 70 69 - 67 66 65 64 63 - - 60 59 58 57 56 - 54 53 - 51 50 49 - - - 45 44 - 42 41 - 39 38 37 36 35 34 33 32 31 - 29 28 27 26 25 24 23 - - - - - 17 - - - 13 12 11 10 9 - 7 - 5 - 3 - 1	SALEABLE		345650003
MX123 CONN ASSY 73 CKT GRY OPT0 KEY B/27	345667473	C-HSG-B0	G-CAP-0-P	TPA-B0	RS	LS	MAL	CPA	MSEAL	RSEAL	- 71 70 69 - - 66 65 64 - - - 60 59 58 57 56 - 54 53 - 51 50 49 - - - 45 44 - 42 41 - 39 38 37 36 35 34 33 32 31 - 29 28 - 26 25 24 23 - - - - - 17 - 15 - 13 12 - 10 9 - 7 - 5 - 3 2 1	SALEABLE		345650003
MX123 CONN ASSY 73 CKT GRY OPT0 KEY B/26	345667483	C-HSG-B0	G-CAP-0-P	TPA-B0	RS	LS	MAL	CPA	MSEAL	RSEAL	- 71 70 69 - 67 66 65 64 63 - - 60 59 58 57 56 - 54 53 - 51 50 49 - - - 45 44 - 42 41 - 39 38 37 36 35 34 33 32 31 - 29 28 27 26 25 24 23 - - - - - - - - - 13 12 11 10 9 - 7 - 5 - 3 - 1	SALEABLE		345650003
MX123 CONN ASSY 73 CKT BLU OPT0 KEY C/39	345667493	C-HSG-C0	G-CAP-0-P	TPA-C0	RS	LS	MAL	CPA	MSEAL	RSEAL	72 71 70 - 68 - 66 65 - 63 - 61 - 59 58 - 56 - - 53 - - - 49 - - - - - 43 - 41 40 39 38 - 36 - - - - 31 30 29 - - - 25 24 23 22 21 20 - - - - - - - - - - - - - 6 5 4 3 2 1	SALEABLE		345650003

molex

MX123 SEALED RCPT ASSY (73 Ckt)
BOM & PIN OUT SHEET

ASSEMBLY DESCRIPTION	ASSEMBLY PART NUMBER	CONNECTOR HOUSING	GROMMET CAP	TPA	RIGHT SLIDE	LEFT SLIDE	MATE ASSIST LEVER	CPA	MAT SEAL	RING SEAL	BLOCKED TERMINALS CAVITY WITH A NUMBER INDICATES BLOCKED TERMINAL POSITION CAVITY WITHOUT A NUMBER INDICATES OPEN TERMINAL POSITION	STATUS	COMMENTS	INTEGRAL COMPONENTS SOLD SEPARATELY DRESS COVER
MX123 CONN ASSY 73 CKT BLK OPT0 KEY A/8	345667503	C-HSG-A0	G-CAP-0-P	TPA-A0	RS	LS	MAL	CPA	MSEAL	RSEAL	- - - - - - - 65 - - - 61 - - - - - - - - - - - - - - - 45 - - - 41 - - - - - - - - - - - - - - - - 26 25 - - - - - - - - - - - - - - - 10 - - - - - - - - -	SALEABLE		345650003
MX123 CONN ASSY 73 CKT BLK OPT9 KEY A/50	345667513	C-HSG-A9	G-CAP-9-P	TPA-A9	RS	LS	MAL	CPA	MSEAL	RSEAL	- - - - - 67 - - - - 62 - - 59 58 - - 55 - - - - - - - 47 - - - - 42 41 - - - - - 35 - - - - - - - - - - - - 27 26 25 24 - - - - 19 18 17 16 - - - - 11 10 9 8 - - - - 3 - 1	SALEABLE		345650003
MX123 CONN ASSY 73 CKT BLK OPT0 KEY A/37	345667523	C-HSG-A0	G-CAP-0-P	TPA-A0	RS	LS	MAL	CPA	MSEAL	RSEAL	- 71 70 69 68 67 66 65 - 63 - - 60 - - - - - - 53 - - 50 49 - - - - 44 - 42 - - 39 38 - 36 35 34 - - - 31 - - 28 - - - - 23 22 21 - 19 18 17 - - 14 - 12 - - - 8 7 6 5 - 3 2 1	SALEABLE		345650003
MX123 CONN ASSY 73 CKT BLK OPT0 KEY A/1	345667543	C-HSG-A0	G-CAP-0-P	TPA-A0	RS	LS	MAL	CPA	MSEAL	RSEAL	72 71 70 69 68 67 66 65 64 63 62 61 60 59 58 57 56 55 54 53 52 51 50 49 48 47 46 45 44 43 42 41 40 39 38 37 36 35 34 33 - 32 31 30 29 28 27 26 25 24 23 22 21 20 19 18 17 16 15 14 13 12 11 10 9 8 7 6 5 4 3 2 1	SALEABLE		345650003
MX123 CONN ASSY 73 CKT GRY OPT0 KEY B/1	345667553	C-HSG-B0	G-CAP-0-P	TPA-B0	RS	LS	MAL	CPA	MSEAL	RSEAL	72 71 70 69 68 67 66 65 64 63 62 61 60 59 58 57 56 55 54 53 52 51 50 49 48 47 46 45 44 43 42 41 40 39 38 37 36 35 34 33 - 32 31 30 29 28 27 26 25 24 23 22 21 20 19 18 17 16 15 14 13 12 11 10 9 8 7 6 5 4 3 2 1	SALEABLE		345650003
MX123 CONN ASSY 73 CKT BLU OPT0 KEY C/1	345667563	C-HSG-C0	G-CAP-0-P	TPA-C0	RS	LS	MAL	CPA	MSEAL	RSEAL	72 71 70 69 68 67 66 65 64 63 62 61 60 59 58 57 56 55 54 53 52 51 50 49 48 47 46 45 44 43 42 41 40 39 38 37 36 35 34 33 - 32 31 30 29 28 27 26 25 24 23 22 21 20 19 18 17 16 15 14 13 12 11 10 9 8 7 6 5 4 3 2 1	SALEABLE		345650003
MX123 CONN ASSY 73 CKT GRY OPT0 KEY B/27	345667573	C-HSG-B0	G-CAP-0-P	TPA-B0	RS	LS	MAL	CPA	MSEAL	RSEAL	- 71 - 69 - 67 66 65 64 63 - - 60 59 58 57 56 - 54 53 - 51 50 49 - - - 45 44 - 42 41 - 39 38 37 36 35 34 33 - 32 31 - 29 28 27 26 25 24 23 - - - - - - - - - 13 12 11 10 9 - 7 - 5 - 3 - 1	SALEABLE		345650003
MX123 CONN ASSY 73 CKT BLK OPT9 KEY A/37	345667583	C-HSG-A9	G-CAP-9-P	TPA-A9	RS	LS	MAL	CPA	MSEAL	RSEAL	- 71 - 69 68 - 66 65 64 - 62 61 - - - - 56 55 54 53 - 51 50 49 - - - 45 44 - - 41 - - - - 36 35 34 33 - - - - - - - 26 25 24 23 - - 20 19 18 17 - - - - - - 10 - 8 - 6 5 4 3 - -	SALEABLE		345650003
MX123 CONN ASSY 73 CKT BLK OPT9 KEY A/52	345667593	C-HSG-A9	G-CAP-9-P	TPA-A9	RS	LS	MAL	CPA	MSEAL	RSEAL	- 71 - - - 67 66 65 - 63 - - 60 - - - - - - - - - - 49 - - - - 44 - 42 - - 39 38 - 36 - 34 - - - 31 - - 28 - - - - 23 22 21 - - - 17 - - - - - - - - - 7 6 - - - - -	SALEABLE		345650003
MX123 CONN ASSY 73 CKT GRY OPT0 KEY B/48	345667603	C-HSG-B0	G-CAP-0-P	TPA-B0	RS	LS	MAL	CPA	MSEAL	RSEAL	72 71 70 - - 67 - 65 64 63 62 61 60 - 58 - 56 - 54 - 52 51 50 - - 47 - 45 - 43 42 41 40 - 38 - 36 - 34 - - 32 31 30 - - 27 26 25 24 - 22 - 20 19 - - 16 15 14 13 - - - 9 8 - 6 5 4 3 2 1	SALEABLE		345650003
MX123 CONN ASSY 73 CKT BLK OPT9 KEY A/64	345667633	C-HSG-A9	G-CAP-9-P	TPA-A9	RS	LS	MAL	CPA	MSEAL	RSEAL	- - - - - - - - - - 62 61 - - - - - - - 53 - - - - - - - - - - - - - - - - - - - 33 - - - - - - - - - 24 - - - - 19 - - - - - - - - 10 - 8 - - - - 3 - -	SALEABLE		345650003
MX123 CONN ASSY 73 CKT GRY OPT9 KEY B/21	345667643	C-HSG-B9	G-CAP-9-P	TPA-B9	RS	LS	MAL	CPA	MSEAL	RSEAL	72 71 70 69 - - 66 65 - 63 62 61 60 - - 57 56 55 54 53 52 51 50 49 48 47 - - 44 43 42 41 40 - - 37 36 35 34 33 - - 31 - - - - 26 25 24 - - 21 20 19 18 - 16 15 14 13 12 11 - 9 8 - 6 5 4 3 2 -	SALEABLE		345650003

molex

MX123 SEALED RCPT ASSY (73 Ckt)
BOM & PIN OUT SHEET

ASSEMBLY DESCRIPTION	ASSEMBLY PART NUMBER	CONNECTOR HOUSING	GROMMET CAP	TPA	RIGHT SLIDE	LEFT SLIDE	MATE ASSIST LEVER	CPA	MAT SEAL	RING SEAL	BLOCKED TERMINALS CAVITY WITH A NUMBER INDICATES BLOCKED TERMINAL POSITION CAVITY WITHOUT A NUMBER INDICATES OPEN TERMINAL POSITION	STATUS	COMMENTS	INTEGRAL COMPONENTS SOLD SEPARATELY DRESS COVER
MX123 CONN ASSY 73 CKT GRY OPT0 KEY B/24	345667653	C-HSG-B0	G-CAP-0-P	TPA-B0	RS	LS	MAL	CPA	MSEAL	RSEAL	- 71 - 69 68 67 66 65 64 63 - - 60 59 58 57 56 - 54 53 - 51 50 49 - - - 45 44 - 42 41 - 39 38 37 36 35 34 33 - 32 31 - 29 28 27 26 25 24 23 - - - - - 17 - - - 13 12 11 10 9 8 7 - 5 - 3 - 1	SALEABLE		345650003
MX123 CONN ASSY 73 CKT GRY OPT0 KEY B/36	345667663	C-HSG-B0	G-CAP-0-P	TPA-B0	RS	LS	MAL	CPA	MSEAL	RSEAL	- 71 - 69 - 67 66 65 64 63 - - - - 58 57 56 - 54 53 - 51 50 49 - - - 45 - - 42 - - 39 - - - - 34 - - 32 31 - 29 28 27 26 25 24 23 - - - - - - - - - 13 12 11 10 9 - 7 - 5 - 3 2 -	SALEABLE		345650003
MX123 CONN ASSY 73 CKT BLU OPT0 KEY C/46	345667673	C-HSG-C0	G-CAP-0-P	TPA-C0	RS	LS	MAL	CPA	MSEAL	RSEAL	72 - - - 68 - - - - 63 62 - - - - - 56 55 - 53 - - - - - - - - - 43 42 - 40 - - - 36 35 - - - - 31 30 29 - - 26 - 24 - 22 21 20 19 - - - - - - - - - - - - - 6 5 4 3 2 1	SALEABLE		345650003
MX123 CONN ASSY 73 CKT GRY OPT9 KEY B/67	345667683	C-HSG-B9	G-CAP-9-P	TPA-B9	RS	LS	MAL	CPA	MSEAL	RSEAL	- - - - - - - - - - - - - - 58 - - - 54 53 - - - - - - - - - - 42 - - - - - - - - - - - - - - 27 - - - - - - - - - - - - - - - - 10 - - - - - - - - -	SALEABLE		345650003
MX123 CONN ASSY 73 CKT BLK OPT9 KEY A/31	345667693	C-HSG-A9	G-CAP-9-P	TPA-A9	RS	LS	MAL	CPA	MSEAL	RSEAL	- 71 70 69 68 67 66 65 - 63 - - 60 59 58 - - - - 53 - - 50 49 48 47 - - 44 - 42 41 - 39 38 - 36 - - 33 - 31 - - 28 - 26 - 24 23 22 21 - 19 18 17 - - 14 - 12 - - - 8 7 6 5 - 3 2 1	SALEABLE		345650003
MX123 CONN ASSY 73 CKT BLK OPT0 KEY A/26	345667703	C-HSG-A0	G-CAP-0-P	TPA-A0	RS	LS	MAL	CPA	MSEAL	RSEAL	- - - - - - - 65 - - - 61 - - 58 57 56 - - - - 51 50 - - 47 46 45 - - - 41 - - 38 37 36 - - - - 31 30 - 28 - 26 25 - - 22 21 20 - - - - 15 14 - - - 10 - - - - - - - - -	SALEABLE		345650003
MX123 CONN ASSY 73 CKT BLK OPT9 KEY A/35	345667713	C-HSG-A9	G-CAP-9-P	TPA-A9	RS	LS	MAL	CPA	MSEAL	RSEAL	- 71 70 69 68 67 66 65 - 63 - - 60 59 - - - - - 53 - - 50 49 - 47 - - 44 - 42 - - 39 38 - 36 - - 33 - 31 - - 28 - 26 - 24 23 22 21 - 19 18 17 - - 14 - 12 - - - 8 7 6 5 - - 2 1	SALEABLE		345650003
MX123 CONN ASSY 73 CKT BLK OPT9 KEY A/30	345667723	C-HSG-A9	G-CAP-9-P	TPA-A9	RS	LS	MAL	CPA	MSEAL	RSEAL	- 71 70 69 68 67 66 65 - 63 - - 60 59 58 - - - - - - - 50 49 48 47 - - 44 - 42 41 - 39 38 - 36 35 34 33 - 31 - - 28 - 26 - 24 23 22 21 - 19 18 17 - - 14 - 12 - - - 8 7 6 5 - 3 2 1	SALEABLE		345650003
MX123 CONN ASSY 73 CKT BLK OPT9 KEY A/34	345667733	C-HSG-A9	G-CAP-9-P	TPA-A9	RS	LS	MAL	CPA	MSEAL	RSEAL	- 71 70 69 68 67 66 65 - 63 - - 60 59 - - - - - - - - 50 49 - 47 - - 44 - 42 - - 39 38 - 36 35 34 33 - 31 - - 28 - 26 - 24 23 22 21 - 19 18 17 - - 14 - 12 - - - 8 7 6 5 - - 2 1	SALEABLE		345650003
MX123 CONN ASSY 73 CKT BLU OPT0 KEY C/45	345667743	C-HSG-C0	G-CAP-0-P	TPA-C0	RS	LS	MAL	CPA	MSEAL	RSEAL	- 71 - 69 - - - 65 64 - - 61 60 - 58 - 56 55 54 - - - 50 - - - - 45 - 43 42 - - - 38 - - - - - - 31 - 29 28 - - - - 23 - - - 19 18 17 16 - - - 12 11 - - - 7 - - - 3 - 1	SALEABLE		345650003
MX123 CONN ASSY 73 CKT BLK OPT0 KEY A/51	345667753	C-HSG-A0	G-CAP-0-P	TPA-A0	RS	LS	MAL	CPA	MSEAL	RSEAL	72 - - - - - 66 65 - - - - - - - - - - - - - - - - 48 47 46 - - - - - 40 - - - - 35 - 33 - - - 30 - - - - - 24 23 22 21 20 - - 17 - - - - - - - - - 7 6 5 4 - 2 1	SALEABLE		345650003
MX123 CONN ASSY 73 CKT NAT OPT0 KEY F/1	345667763	C-HSG-F0	G-CAP-0-P	TPA-F0	RS	LS	MAL	CPA	MSEAL	RSEAL	72 71 70 69 68 67 66 65 64 63 62 61 60 59 58 57 56 55 54 53 52 51 50 49 48 47 46 45 44 43 42 41 40 39 38 37 36 35 34 33 - 32 31 30 29 28 27 26 25 24 23 22 21 20 19 18 17 16 15 14 13 12 11 10 9 8 7 6 5 4 3 2 1	SALEABLE		345650003

molex

MX123 SEALED RCPT ASSY (73 Ckt)
BOM & PIN OUT SHEET

ASSEMBLY DESCRIPTION	ASSEMBLY PART NUMBER	CONNECTOR HOUSING	GROMMET CAP	TPA	RIGHT SLIDE	LEFT SLIDE	MATE ASSIST LEVER	CPA	MAT SEAL	RING SEAL	BLOCKED TERMINALS CAVITY WITH A NUMBER INDICATES BLOCKED TERMINAL POSITION CAVITY WITHOUT A NUMBER INDICATES OPEN TERMINAL POSITION	STATUS	COMMENTS	INTEGRAL COMPONENTS SOLD SEPARATELY DRESS COVER
MX123 CONN ASSY 73 CKT GRY OPT0 KEY B/25	345667773	C-HSG-B0	G-CAP-0-P	TPA-B0	RS	LS	MAL	CPA	MSEAL	RSEAL	- 71 - 69 68 - 66 65 64 - - - - - 58 57 56 55 54 53 - 51 50 49 48 47 - 45 44 - 42 - - 39 38 37 36 35 34 33 - 32 31 30 29 28 - 26 25 24 23 - - - - - 17 - 15 - 13 12 - 10 9 8 7 - 5 - 3 2 1	SALEABLE		345650003
MX123 CONN ASSY 73 CKT BLK OPT0 KEY A/51	345667783	C-HSG-A0	G-CAP-0-P	TPA-A0	RS	LS	MAL	CPA	MSEAL	RSEAL	- - - - - 67 - - - - 62 61 - 59 58 - - 55 - 53 - - - - - 47 - - - - - - - - - - 35 - 33 - - - - - 27 - - 24 - - - 20 19 18 17 16 - - - - 11 10 - 8 - - - 4 3 - -	SALEABLE		345650003
MX123 CONN ASSY 73 CKT BLK OPT0 KEY A/40	345667793	C-HSG-A0	G-CAP-0-P	TPA-A0	RS	LS	MAL	CPA	MSEAL	RSEAL	- 71 - 69 68 - - - 64 - 62 61 - - - - - - 54 53 - - 50 - - - - - 44 - - 41 - - - - - - 34 33 - 32 31 30 29 - - 26 25 24 - - - 20 19 - - 16 15 14 13 - - 10 - 8 7 6 5 4 3 - -	SALEABLE		345650003
MX123 CONN ASSY 73 CKT BLK OPT0 KEY A/26	345667803	C-HSG-A0	G-CAP-0-P	TPA-A0	RS	LS	MAL	CPA	MSEAL	RSEAL	- - - 69 - 67 - 65 - - - - - - 58 57 56 - - - - 51 50 - - 47 - 45 - - - 41 - - 38 37 36 - - - - 31 30 - - - 26 25 - - 22 21 20 - - - - 15 - - - - 10 - - - - 5 4 - - -	SALEABLE		345650003
MX123 CONN ASSY 73 CKT BLK OPT0 KEY A/50	345667813	C-HSG-A0	G-CAP-0-P	TPA-A0	RS	LS	MAL	CPA	MSEAL	RSEAL	72 71 - - - - 66 65 64 - - - - - - - - - - - - - - - 48 47 46 45 - - - - - - - - - 35 - 33 - 31 30 - - - - - 24 23 22 - 20 - - 17 - - - - - - - - - 7 6 - 4 - 2 1	SALEABLE		345650003
MX123 CONN ASSY 73 CKT GRY OPT0 KEY B/32	345667823	C-HSG-B0	G-CAP-0-P	TPA-B0	RS	LS	MAL	CPA	MSEAL	RSEAL	- 71 70 69 - - 66 65 64 - - - - - 58 57 56 55 54 53 - 51 50 49 - - - 45 - - 42 - - 39 - - - - 34 33 - 32 31 - 29 28 - 26 25 24 23 22 21 - - - 17 - 15 - 13 12 - 10 9 - 7 6 5 - 3 2 -	SALEABLE		345650003
MX123 CONN ASSY 73 CKT GRY OPT0 KEY B/64	345667833	C-HSG-B0	G-CAP-0-P	TPA-B0	RS	LS	MAL	CPA	MSEAL	RSEAL	- - - - - - - - - - 62 - - - 58 - - - 54 53 - - - - - - - - - - 42 - - - - - - - - - - - - - - - 27 - - - - - - - - - - - - - - - 11 10 9 - - - - - - - -	SALEABLE		345650003
MX123 CONN ASSY 73 CKT BLU OPT9 KEY C/38	345667843	C-HSG-C9	G-CAP-9-P	TPA-C9	RS	LS	MAL	CPA	MSEAL	RSEAL	72 - 70 69 68 - 66 - - 63 - - - 59 - - 56 55 - 53 - - - - - - 46 - - 43 - - 40 39 - - 36 35 - - 32 31 30 29 - - - - 24 23 22 21 20 19 - 17 - - - - - - - - 8 7 6 5 4 3 2 1	SALEABLE		345650003
MX123 CONN ASSY 73 CKT BLU OPT9 KEY C/41	345667853	C-HSG-C9	G-CAP-9-P	TPA-C9	RS	LS	MAL	CPA	MSEAL	RSEAL	- - - - 68 - - 65 - 63 62 61 60 59 58 57 56 55 - 53 - - - - 48 - - 45 - 43 42 41 40 - - 37 36 35 34 33 32 31 - - - - - - - - - - 20 19 18 - - - - - - - - - - - - - 4 3 2 1	SALEABLE		345650003
MX123 CONN ASSY 73 CKT BLU OPT9 KEY C/41	345667863	C-HSG-C9	G-CAP-9-P	TPA-C9	RS	LS	MAL	CPA	MSEAL	RSEAL	- 71 - 69 - - - 65 64 - - 61 60 - 58 - 56 55 54 - - - 50 49 - - - 45 - 43 42 41 - - 38 - - - - - - 31 - 29 28 - - - - 23 - - 20 19 18 17 16 - - 13 12 11 - - - 7 - - - 3 - 1	SALEABLE		345650003
MX123 CONN ASSY 73 CKT BLK OPT9 KEY A/29	345667873	C-HSG-A9	G-CAP-9-P	TPA-A9	RS	LS	MAL	CPA	MSEAL	RSEAL	72 - 70 - 68 67 66 - - 63 62 - - 59 - 57 - - - 53 52 51 - 49 48 47 46 - 44 - - 41 40 39 - 37 36 - 34 33 32 - 30 - - 27 26 25 24 - 22 21 20 - - - - 15 14 13 - - 10 9 8 7 6 5 4 - 2 -	SALEABLE		345650003
MX123 CONN ASSY 73 CKT BLK OPT9 KEY A/30	345667883	C-HSG-A9	G-CAP-9-P	TPA-A9	RS	LS	MAL	CPA	MSEAL	RSEAL	- 71 70 69 - - - - 64 63 62 61 60 59 58 57 56 55 54 53 52 51 50 49 - - 46 45 44 43 42 41 - 39 - 37 36 - 34 - 32 - - 29 28 27 26 - - - - - - - 18 - 16 15 14 13 12 11 10 - - - - - - - 3 - -	SALEABLE		345650003

molex

MX123 SEALED RCPT ASSY (73 Ckt)
BOM & PIN OUT SHEET

ASSEMBLY DESCRIPTION	ASSEMBLY PART NUMBER	CONNECTOR HOUSING	GROMMET CAP	TPA	RIGHT SLIDE	LEFT SLIDE	MATE ASSIST LEVER	CPA	MAT SEAL	RING SEAL	BLOCKED TERMINALS CAVITY WITH A NUMBER INDICATES BLOCKED TERMINAL POSITION CAVITY WITHOUT A NUMBER INDICATES OPEN TERMINAL POSITION	STATUS	COMMENTS	INTEGRAL COMPONENTS SOLD SEPARATELY DRESS COVER
MX123 CONN ASSY 73 CKT BLK OPT9 KEY A/51	345667893	C-HSG-A9	G-CAP-9-P	TPA-A9	RS	LS	MAL	CPA	MSEAL	RSEAL	- - - - - 67 - - - - 62 - - 59 58 - - 55 - - - - - - - 47 - - - - - 41 - - - - - 35 - - - - - - - - - - 27 26 25 24 - - - - 19 18 17 16 - - - - 11 10 9 8 - - - - 3 - 1	SALEABLE		345650003
MX123 CONN ASSY 73 CKT GRY OPT0 KEY B/39	345667903	C-HSG-B0	G-CAP-0-P	TPA-B0	RS	LS	MAL	CPA	MSEAL	RSEAL	72 71 70 69 68 67 66 65 - 63 62 - 60 - 58 - 56 - 54 - 52 51 50 49 48 47 46 45 44 43 - 41 40 - 38 37 36 - 34 - 32 31 30 29 28 27 26 25 24 - 22 21 - - 18 17 16 - 14 13 12 11 10 9 8 7 6 5 - - - -	SALEABLE		345650003
MX123 CONN ASSY 73 CKT BLU OPT0 KEY C/37	345667923	C-HSG-C0	G-CAP-0-P	TPA-C0	RS	LS	MAL	CPA	MSEAL	RSEAL	72 - - 69 68 - 66 65 - 63 62 - - 59 58 - 56 55 - 53 - - - - - - 46 - - 43 42 - 40 39 38 - 36 35 - - - 31 30 29 - - 26 - 24 23 22 21 20 19 - - - - - - - - - - - - 6 5 4 3 2 1	SALEABLE		345650003
MX123 CONN ASSY 73 CKT BLK OPT0 KEY A/50	345667933	C-HSG-A0	G-CAP-0-P	TPA-A0	RS	LS	MAL	CPA	MSEAL	RSEAL	- - - - - 67 - - - - 62 - - 59 58 - - 55 - - - - - - - 47 - - - - 42 41 - - - - - 35 - - - - - - - 27 26 25 24 - - - - 19 18 17 16 - - - - 11 10 9 8 - - - - 3 - 1	SALEABLE		345650003
MX123 CONN ASSY 73 CKT GRY OPT0 KEY B/32	345667943	C-HSG-B0	G-CAP-0-P	TPA-B0	RS	LS	MAL	CPA	MSEAL	RSEAL	- 71 70 69 68 67 66 65 64 63 - - - - 58 57 56 - 54 53 - 51 50 49 - - - 45 44 - 42 - - 39 - - - - 34 33 32 - - 29 28 27 26 25 24 23 - - - - - - - - - 13 12 11 10 9 8 7 - 5 - 3 2 -	SALEABLE		345650003
MX123 CONN ASSY 73 CKT GRY OPT0 KEY B/32	345667953	C-HSG-B0	G-CAP-0-P	TPA-B0	RS	LS	MAL	CPA	MSEAL	RSEAL	- 71 70 69 68 67 66 65 64 63 - - - - 58 57 56 - 54 53 - 51 50 49 - - - 45 44 - 42 - - 39 - - - - 34 33 32 - - 29 28 27 26 25 24 23 - - - - - - - - - 13 12 11 10 9 8 7 - 5 - 3 - 1	SALEABLE		345650003
MX123 CONN ASSY 73 CKT BLK OPT9 KEY A/54	345667963	C-HSG-A9	G-CAP-9-P	TPA-A9	RS	LS	MAL	CPA	MSEAL	RSEAL	- - - - - 67 - - - - 62 - - 59 58 - - 55 - - - - - - - 47 - - - - - 41 - - - - - 35 - - - - - - - 27 - - 24 - - - - 19 18 17 16 - - - - 11 10 - 8 - - - - 3 - 1	SALEABLE		345650003
MX123 CONN ASSY 73 CKT GRY OPT9 KEY B/36	345667973	C-HSG-B9	G-CAP-9-P	TPA-B9	RS	LS	MAL	CPA	MSEAL	RSEAL	- 71 70 69 68 67 66 65 64 63 - - - - 58 57 56 - 54 53 - 51 - - - - - - 44 - 42 - - 39 - - - - - 33 32 31 - - 28 27 26 25 24 23 - - - - - - - - - 13 12 11 10 9 8 7 - 5 - 3 2 -	SALEABLE		345650003
MX123 CONN ASSY 73 CKT GRY OPT9 KEY B/32	345667983	C-HSG-B9	G-CAP-9-P	TPA-B9	RS	LS	MAL	CPA	MSEAL	RSEAL	- 71 70 69 68 67 66 65 64 63 - - - - 58 57 56 - 54 53 - 51 - - - - - - 44 - 42 - - 39 38 37 36 35 - - 32 31 - - 28 27 26 25 24 23 - - - - - - - - - 13 12 11 10 9 8 7 - 5 - 3 2 1	SALEABLE		345650003
MX123 CONN ASSY 73 CKT BLU OPT9 KEY C/39	345667993	C-HSG-C9	G-CAP-9-P	TPA-C9	RS	LS	MAL	CPA	MSEAL	RSEAL	72 71 - - 68 - - 65 - 63 62 - - 59 58 - 56 55 - 53 - - - - - - - - - 43 42 - 40 39 38 - 36 35 - - - 31 30 29 - - 26 - 24 23 22 21 20 19 - - - - - - - - - - - - 6 5 4 3 2 1	SALEABLE		345650003
MX123 CONN ASSY 73 CKT BLK OPT0 KEY A/33	345668003	C-HSG-A0	G-CAP-0-P	TPA-A0	RS	LS	MAL	CPA	MSEAL	RSEAL	72 71 70 - - 67 66 - - - 62 - - - - 57 - 55 54 53 - 51 - - - - 46 45 44 43 42 - 40 39 - - - 35 - - - - - - - 26 25 - - 22 21 - - - - - 15 14 - - - - - 8 7 6 5 4 3 2 -	SALEABLE		345650003
MX123 CONN ASSY 73 CKT BLU OPT9 KEY C/38	345668013	C-HSG-C9	G-CAP-9-P	TPA-C9	RS	LS	MAL	CPA	MSEAL	RSEAL	72 - 70 69 68 - 66 - - 63 62 - - - 58 - 56 55 - 53 - - - 49 - - 46 - - 43 42 - 40 - 38 - 36 35 - - - 31 30 29 - - 26 - 24 - 22 21 20 19 - 17 - - - - - - - - - - 6 5 4 3 2 1	SALEABLE		345650003

molex

MX123 SEALED RCPT ASSY (73 Ckt)
BOM & PIN OUT SHEET

ASSEMBLY DESCRIPTION	ASSEMBLY PART NUMBER	CONNECTOR HOUSING	GROMMET CAP	TPA	RIGHT SLIDE	LEFT SLIDE	MATE ASSIST LEVER	CPA	MAT SEAL	RING SEAL	BLOCKED TERMINALS CAVITY WITH A NUMBER INDICATES BLOCKED TERMINAL POSITION CAVITY WITHOUT A NUMBER INDICATES OPEN TERMINAL POSITION	STATUS	COMMENTS	INTEGRAL COMPONENTS SOLD SEPARATELY DRESS COVER
MX123 CONN ASSY 73 CKT BLU OPT9 KEY C/35	345668023	C-HSG-C9	G-CAP-9-P	TPA-C9	RS	LS	MAL	CPA	MSEAL	RSEAL	- 71 70 - - 67 66 65 64 - - 61 60 - 58 57 - - 54 - 52 51 50 49 48 47 - 45 44 - - 41 - - 38 37 - - 34 33 - 32 - - - 28 27 - 25 - - - - - - - 18 17 16 15 14 13 12 11 10 9 - - - - - - - -	SALEABLE		345650003
MX123 CONN ASSY 73 CKT GRY OPT9 KEY B/39	345668033	C-HSG-B9	G-CAP-9-P	TPA-B9	RS	LS	MAL	CPA	MSEAL	RSEAL	72 - - - 68 - - - - - 62 61 60 59 - - - 55 - 53 52 - - - 48 47 46 - 44 43 - 41 40 - 38 37 36 35 - - - - - 30 - - - - - - - 22 21 20 19 18 17 16 15 14 - - - - - 8 - 6 - 4 - - 1	SALEABLE		345650003
MX123 CONN ASSY 73 CKT BLK OPT9 KEY A/28	345668043	C-HSG-A9	G-CAP-9-P	TPA-A9	RS	LS	MAL	CPA	MSEAL	RSEAL	72 71 70 69 68 - 66 65 64 63 - - 60 - - 57 56 - 54 - 52 51 50 49 48 - 46 45 44 43 - 41 40 39 38 37 36 - 34 - - 32 31 30 29 28 - - - - 23 22 21 - - - - - 15 14 13 12 - - - - 7 6 5 - - 2 -	SALEABLE		345650003
MX123 CONN ASSY 73 CKT BLK OPT9 KEY A/27	345668053	C-HSG-A9	G-CAP-9-P	TPA-A9	RS	LS	MAL	CPA	MSEAL	RSEAL	- 71 70 69 - - - 65 64 63 62 61 60 - 58 57 56 55 54 53 52 51 50 49 48 47 - 45 44 43 42 41 - 39 - 37 36 - 34 - - 32 - 30 29 28 27 26 - 24 - - - - - 18 - 16 15 14 13 12 11 10 - - - - - - - 3 - -	SALEABLE		345650003
MX123 CONN ASSY 73 CKT BLU OPT9 KEY C/30	345668063	C-HSG-C9	G-CAP-9-P	TPA-C9	RS	LS	MAL	CPA	MSEAL	RSEAL	72 - 70 - 68 67 66 - - 63 62 - - 59 - 57 - - - 53 52 51 - 49 48 47 46 - 44 - - 41 40 39 - 37 36 - 34 33 - 32 - 30 - - 27 26 25 24 - 22 21 20 - - - - 15 14 13 - - 10 9 8 - 6 5 4 - 2 -	SALEABLE		345650003
MX123 CONN ASSY 73 CKT GRY OPT9 KEY B/21	345668073	C-HSG-B9	G-CAP-9-P	TPA-B9	RS	LS	MAL	CPA	MSEAL	RSEAL	72 71 70 - 68 67 66 - - - 62 61 60 59 58 57 56 55 54 53 52 51 50 - 48 47 46 - - - 42 41 40 39 38 37 36 35 34 33 - 32 31 30 29 28 27 26 25 24 - - - - - 18 17 16 15 14 13 - - 10 - 8 - - - - 3 2 1	SALEABLE		345650003
MX123 CONN ASSY 73 CKT GRY OPT9 KEY B/11	345668083	C-HSG-B9	G-CAP-9-P	TPA-B9	RS	LS	MAL	CPA	MSEAL	RSEAL	72 71 70 69 68 67 66 65 64 63 - 61 60 - - 57 56 55 - - 52 51 50 49 48 47 46 45 44 43 - 41 40 - 38 37 36 35 34 33 - 32 31 30 29 28 - 26 25 24 23 22 21 20 19 18 17 16 15 14 13 12 11 - - 8 7 6 5 4 3 2 1	SALEABLE		345650003
MX123 CONN ASSY 73 CKT BLK OPT9 KEY A/37	345668093	C-HSG-A9	G-CAP-9-P	TPA-A9	RS	LS	MAL	CPA	MSEAL	RSEAL	72 - 70 - - 67 - - - 63 - - 60 59 58 57 56 55 - - 52 51 - - 48 47 46 - - 43 42 - 40 39 38 37 36 35 - - - - - - 28 27 - - - - 22 21 - - 18 17 - - - - 12 11 - 9 - 7 - 5 - - 2 1	SALEABLE		345650003
MX123 CONN ASSY 73 CKT BLU OPT9 KEY C/34	345668113	C-HSG-C9	G-CAP-9-P	TPA-C9	RS	LS	MAL	CPA	MSEAL	RSEAL	72 71 70 69 - 67 66 65 64 - - - - - - - 56 - 54 - 52 51 50 49 - 47 46 45 44 - - - - 39 38 - - - 34 - - - 31 30 29 28 - 26 25 - 23 22 21 - - - 17 16 15 14 13 12 - - 9 - 7 6 - - - - -	SALEABLE		345650003
MX123 CONN ASSY 73 CKT BLU OPT0 KEY C/34	345668153	C-HSG-C0	G-CAP-0-P	TPA-C0	RS	LS	MAL	CPA	MSEAL	RSEAL	- - - - - - - - - - - - - - - - - 54 53 - - - 49 48 47 46 45 44 43 - - 40 39 38 37 36 - - - - 32 31 30 29 - - 26 25 24 23 22 21 20 19 - 17 - 15 - - 12 11 10 9 8 7 6 5 4 - 2 1	SALEABLE		345650003
MX123 CONN ASSY 73 CKT GRY OPT9 KEY B/36	345668163	C-HSG-B9	G-CAP-9-P	TPA-B9	RS	LS	MAL	CPA	MSEAL	RSEAL	72 71 70 69 - - 66 65 - - 62 61 60 - - 57 56 - - 53 52 51 50 49 48 - - - - - 42 41 40 - - 37 36 - 34 33 - - - - - - 26 25 24 - - 21 20 - 18 - 16 - 14 - - - - - 8 7 - 5 - 3 2 -	SALEABLE		345650003
MX123 CONN ASSY 73 CKT GRY OPT0 KEY B/27	345668173	C-HSG-B0	G-CAP-0-P	TPA-B0	RS	LS	MAL	CPA	MSEAL	RSEAL	- 71 - 69 - - 66 65 64 - - - - - 58 57 56 55 54 53 - 51 50 49 48 47 - 45 44 - 42 - - 39 38 37 36 35 34 33 - 32 31 30 29 28 - 26 25 24 23 - - - - - 17 - 15 - 13 12 - 10 9 - 7 - 5 - 3 2 1	SALEABLE		345650003

molex

MX123 SEALED RCPT ASSY (73 Ckt)
BOM & PIN OUT SHEET

ASSEMBLY DESCRIPTION	ASSEMBLY PART NUMBER	CONNECTOR HOUSING	GROMMET CAP	TPA	RIGHT SLIDE	LEFT SLIDE	MATE ASSIST LEVER	CPA	MAT SEAL	RING SEAL	BLOCKED TERMINALS CAVITY WITH A NUMBER INDICATES BLOCKED TERMINAL POSITION CAVITY WITHOUT A NUMBER INDICATES OPEN TERMINAL POSITION	STATUS	COMMENTS	INTEGRAL COMPONENTS SOLD SEPARATELY DRESS COVER
MX123 CONN ASSY 73 CKT BLK OPT0 KEY A/42	345668203	C-HSG-A0	G-CAP-0-P	TPA-A0	RS	LS	MAL	CPA	MSEAL	RSEAL	72 71 - 69 68 - - 65 64 63 62 61 60 59 - 57 - - - 53 52 51 50 49 48 - 46 45 - - - - 40 - 38 - - 35 - 33 - 32 - - 29 28 - 26 - - 23 22 - - - - 17 16 15 14 - 12 11 10 9 8 7 - - - - 2 -	SALEABLE		345650003
MX123 CONN ASSY 73 CKT BLK OPT9 KEY A/22	345668223	C-HSG-A9	G-CAP-9-P	TPA-A9	RS	LS	MAL	CPA	MSEAL	RSEAL	- 71 70 69 68 67 66 65 64 63 - - 60 - 58 - 56 - 54 53 - - 50 49 48 47 46 45 44 43 42 41 - 39 38 - 36 35 34 33 - 31 30 - 28 27 26 - 24 23 22 21 - 19 18 17 - - - 13 - - - - 8 7 6 5 4 3 2 1	SALEABLE		345650003
MX123 CONN ASSY 73 CKT BLK OPT9 KEY A/43	345668293	C-HSG-A9	G-CAP-9-P	TPA-A9	RS	LS	MAL	CPA	MSEAL	RSEAL	72 - - - - - - - 64 - 62 61 - - - 57 56 55 54 53 52 51 - - - - 46 45 - 43 - 41 40 - - 37 - - - - - 32 - 30 29 - 27 - 25 - - - - 20 - - - 16 15 - 13 - 11 10 9 - - - - 4 - - -	SALEABLE		345650003
MX123 CONN ASSY 73 CKT BLK OPT0 KEY A/14	345668303	C-HSG-A0	G-CAP-0-P	TPA-A0	RS	LS	MAL	CPA	MSEAL	RSEAL	- - 70 - - - - 65 - - - 61 60 - - - - 55 - - - - - - - - - 45 - - - 41 40 - - - - - - - - - - - 28 - 26 25 - - - - - - 18 - 16 - - - - - 10 - - - - - - - - -	SALEABLE		345650003
MX123 CONN ASSY 73 CKT BLK OPT9 KEY A/41	345668313	C-HSG-A9	G-CAP-9-P	TPA-A9	RS	LS	MAL	CPA	MSEAL	RSEAL	72 - - - 68 - - - 64 - 62 61 - - - 57 56 55 54 53 52 51 - - - - 46 45 - 43 - - 40 - - 37 - - - - - 32 - 30 29 - 27 - 25 - - - - 20 - - - 16 15 14 13 - 11 10 9 - - - 5 4 - - -	SALEABLE		345650003
MX123 CONN ASSY 73 CKT BLK OPT9 KEY A/38	345668323	C-HSG-A9	G-CAP-9-P	TPA-A9	RS	LS	MAL	CPA	MSEAL	RSEAL	72 - - - - - - - 64 - 62 61 - 59 58 57 56 55 54 - 52 51 - - 48 - 46 45 - 43 - 41 40 - - 37 - 35 34 - - 32 - 30 29 - 27 - 25 - - - - 20 - - - 16 15 - 13 - 11 10 9 - - - - 4 3 - -	SALEABLE		345650003
MX123 CONN ASSY 73 CKT BLK OPT9 KEY A/42	345668333	C-HSG-A9	G-CAP-9-P	TPA-A9	RS	LS	MAL	CPA	MSEAL	RSEAL	72 - - - - - - - 64 - 62 61 - 59 - 57 56 55 54 - 52 51 - - - - 46 45 - 43 - - 40 - - 37 - 35 34 - - 32 - 30 29 - 27 - 25 - - - - 20 - - - 16 15 - 13 - 11 10 9 - - - - 4 - - -	SALEABLE		345650003
MX123 CONN ASSY 73 CKT BLK OPT9 KEY A/40	345668343	C-HSG-A9	G-CAP-9-P	TPA-A9	RS	LS	MAL	CPA	MSEAL	RSEAL	72 - - - - - - - 64 - 62 61 - - 58 57 56 55 54 53 52 51 - - 48 - 46 45 - 43 - 41 40 - - 37 - - - - - 32 - 30 29 - 27 - 25 - - - - 20 - - - 16 15 - 13 - 11 10 9 - - - - 4 3 - -	SALEABLE		345650003
MX123 CONN ASSY 73 CKT BLK OPT9 KEY A/31	345668353	C-HSG-A9	G-CAP-9-P	TPA-A9	RS	LS	MAL	CPA	MSEAL	RSEAL	- 71 70 69 68 67 66 65 - 63 - - 60 59 58 - - - - - - - 50 49 48 47 - - 44 - 42 - - 39 38 - 36 35 34 33 - 31 - - 28 - 26 - 24 23 22 21 - 19 18 17 - - 14 - 12 - - - 8 7 6 5 - 3 2 1	SALEABLE		345650003
MX123 CONN ASSY 73 CKT BLK OPT9 KEY A/33	345668363	C-HSG-A9	G-CAP-9-P	TPA-A9	RS	LS	MAL	CPA	MSEAL	RSEAL	- 71 70 69 - 67 66 65 - 63 - - 60 59 58 - - - - - - - 50 49 48 47 - - 44 - 42 41 - 39 38 - 36 35 34 33 - 31 - - 28 - 26 - 24 23 22 21 - 19 18 17 - - - - 12 - - - 8 7 6 - - 3 2 1	SALEABLE		345650003
MX123 CONN ASSY 73 CKT BLK OPT9 KEY A/36	345668373	C-HSG-A9	G-CAP-9-P	TPA-A9	RS	LS	MAL	CPA	MSEAL	RSEAL	- 71 70 69 68 67 66 65 - 63 - - 60 - - - - - - 53 - - 50 49 - 47 - - 44 - 42 - - 39 38 - 36 - - 33 - 31 - - 28 - 26 - 24 23 22 21 - 19 18 17 - - 14 - 12 - - - 8 7 6 5 - - 2 1	SALEABLE		345650003
MX123 CONN ASSY 73 CKT BLK OPT9 KEY A/32	345668383	C-HSG-A9	G-CAP-9-P	TPA-A9	RS	LS	MAL	CPA	MSEAL	RSEAL	- 71 70 69 68 67 66 65 - 63 - - 60 - 58 - - - - 53 - - 50 49 48 47 - - 44 - 42 41 - 39 38 - 36 - - 33 - 31 - - 28 - 26 - 24 23 22 21 - 19 18 17 - - 14 - 12 - - - 8 7 6 5 - 3 2 1	SALEABLE		345650003

molex

MX123 SEALED RCPT ASSY (73 Ckt)
BOM & PIN OUT SHEET

ASSEMBLY DESCRIPTION	ASSEMBLY PART NUMBER	CONNECTOR HOUSING	GROMMET CAP	TPA	RIGHT SLIDE	LEFT SLIDE	MATE ASSIST LEVER	CPA	MAT SEAL	RING SEAL	BLOCKED TERMINALS CAVITY WITH A NUMBER INDICATES BLOCKED TERMINAL POSITION CAVITY WITHOUT A NUMBER INDICATES OPEN TERMINAL POSITION	STATUS	COMMENTS	INTEGRAL COMPONENTS SOLD SEPARATELY DRESS COVER
MX123 CONN ASSY 73 CKT BLK OPT0 KEY A/44	345668393	C-HSG-A0	G-CAP-0-P	TPA-A0	RS	LS	MAL	CPA	MSEAL	RSEAL	- 71 - 69 68 67 66 65 64 - - 61 60 59 58 57 - - - - - - 50 - - 47 46 45 44 - 42 41 40 39 38 37 - - - - - 32 - - - - - 26 25 - - - - - - - - - - - - - 11 - - - - - 5 4 - - -	SALEABLE		345650003
MX123 CONN ASSY 73 CKT GRY OPT0 KEY B/48	345668403	C-HSG-B0	G-CAP-0-P	TPA-B0	RS	LS	MAL	CPA	MSEAL	RSEAL	72 71 70 69 68 67 66 - - 63 62 61 60 - 58 - 56 - 54 - 52 51 - - - 47 - 45 44 43 42 41 40 - 38 - 36 - 34 - - 31 30 - 28 27 26 25 - - 22 - 20 19 18 17 16 - 14 13 12 11 10 9 8 - - - - - 2 1	SALEABLE		345650003
MX123 CONN ASSY 73 CKT BLK OPT0 KEY A/43	345668413	C-HSG-A0	G-CAP-0-P	TPA-A0	RS	LS	MAL	CPA	MSEAL	RSEAL	- 71 - 69 68 67 66 65 64 - - 61 60 59 58 57 - - - - - - 50 - - 47 46 45 44 - 42 41 40 39 38 37 - - - - - 32 - - - - - 26 25 - - - - - - - - - - - 13 - 11 - - - - - 5 4 - - -	SALEABLE		345650003
MX123 CONN ASSY 73 CKT BLU OPT0 KEY C/36	345668423	C-HSG-C0	G-CAP-0-P	TPA-C0	RS	LS	MAL	CPA	MSEAL	RSEAL	72 71 70 - 68 - 66 65 - 63 - - - 59 58 - 56 55 - 53 - - - - - 47 - - - 43 - - 40 39 38 - 36 35 - - - 32 31 30 29 - - - - 24 23 22 21 20 19 18 17 - - - - - - - - - - 6 5 4 3 2 1	SALEABLE		345650003
MX123 CONN ASSY 73 CKT BLU OPT0 KEY C/45	345668443	C-HSG-C0	G-CAP-0-P	TPA-C0	RS	LS	MAL	CPA	MSEAL	RSEAL	72 - - 69 68 - - - - 63 62 - - - - - 56 55 - 53 - - - 49 - - 46 - - 43 42 - 40 - - - 36 35 - - - - 31 30 29 - - 26 - 24 - 22 21 20 19 - - - - - - - - - - - - - - - 4 3 2 1	SALEABLE		345650003
MX123 CONN ASSY 73 CKT BLK OPT0 KEY A/48	345668453	C-HSG-A0	G-CAP-0-P	TPA-A0	RS	LS	MAL	CPA	MSEAL	RSEAL	- - - - - 67 - - - - 62 61 - 59 58 - - 55 - 53 - - - - - 47 - - - - - 41 - - - - - 35 - 33 - - - - - - - 27 26 25 24 - - - - 19 18 17 16 - - - - 11 10 9 8 - - - - 3 - 1	SALEABLE		345650003
MX123 CONN ASSY 73 CKT GRY OPT0 KEY B/34	345668463	C-HSG-B0	G-CAP-0-P	TPA-B0	RS	LS	MAL	CPA	MSEAL	RSEAL	- 71 - 69 - 67 66 65 64 63 - - - - 58 57 56 - 54 53 - 51 50 49 - - - 45 - - 42 - - 39 - - - - 34 33 - 32 31 - 29 28 27 26 25 24 23 - - - - - 17 - - - 13 12 11 10 9 - 7 - 5 - 3 2 -	SALEABLE		345650003
MX123 CONN ASSY 73 CKT BLU OPT0 KEY C/49	345668473	C-HSG-C0	G-CAP-0-P	TPA-C0	RS	LS	MAL	CPA	MSEAL	RSEAL	72 - - 69 68 - - - - 63 - - - 59 - - 56 - - 53 - - - - - - 46 - - 43 - - 40 39 - - 36 - - - - 31 30 29 - - - - 24 23 22 21 20 - - - - - - - - - - - - - - - 4 3 2 1	SALEABLE		345650003
MX123 CONN ASSY 73 CKT BLK OPT0 KEY A/51	345668483	C-HSG-A0	G-CAP-0-P	TPA-A0	RS	LS	MAL	CPA	MSEAL	RSEAL	- - - - - 67 - - - - 62 - - 59 58 - - 55 - - - - - - - 47 - - - - - 41 - - - - - 35 - - - - - - - - - 27 26 25 24 - - - - 19 18 17 16 - - - - 11 10 9 8 - - - - 3 - 1	SALEABLE		345650003
MX123 CONN ASSY 73 CKT GRY OPT0 KEY B/31	345668493	C-HSG-B0	G-CAP-0-P	TPA-B0	RS	LS	MAL	CPA	MSEAL	RSEAL	- 71 - 69 - - 66 65 64 63 - - - - 58 57 56 - 54 53 - 51 50 49 - - - 45 - - 42 41 - 39 38 37 36 35 34 - - 32 31 - 29 28 27 26 25 24 23 - - - - - - - - - 13 12 11 10 9 - 7 - 5 - 3 2 1	SALEABLE		345650003
MX123 CONN ASSY 73 CKT GRY OPT0 KEY B/27	345668503	C-HSG-B0	G-CAP-0-P	TPA-B0	RS	LS	MAL	CPA	MSEAL	RSEAL	- - - - - - - - - - - 61 - - 58 57 56 - - - - 51 50 - - 47 46 45 - - - 41 40 - 38 37 36 - - - - 31 30 - 28 - 26 25 - - 22 21 20 - - - 16 15 14 - - - 10 - - - - - - - - -	SALEABLE		345650003
MX123 CONN ASSY 73 CKT BLK OPT9 KEY A/48	345668513	C-HSG-A9	G-CAP-9-P	TPA-A9	RS	LS	MAL	CPA	MSEAL	RSEAL	- - - - - 67 - - - - 62 - - 59 58 - - 55 - - - - - - - 47 - - - - 42 41 - - - - - 35 - - - - - - - - - 27 26 25 - - - 21 20 19 18 17 16 - - - - 11 10 9 8 - - - 4 3 - 1	SALEABLE		345650003

molex

MX123 SEALED RCPT ASSY (73 Ckt)
BOM & PIN OUT SHEET

ASSEMBLY DESCRIPTION	ASSEMBLY PART NUMBER	CONNECTOR HOUSING	GROMMET CAP	TPA	RIGHT SLIDE	LEFT SLIDE	MATE ASSIST LEVER	CPA	MAT SEAL	RING SEAL	BLOCKED TERMINALS CAVITY WITH A NUMBER INDICATES BLOCKED TERMINAL POSITION CAVITY WITHOUT A NUMBER INDICATES OPEN TERMINAL POSITION	STATUS	COMMENTS	INTEGRAL COMPONENTS SOLD SEPARATELY DRESS COVER
MX123 CONN ASSY 73 CKT GRY OPT9 KEY B/27	345668523	C-HSG-B9	G-CAP-9-P	TPA-B9	RS	LS	MAL	CPA	MSEAL	RSEAL	- 71 - 69 - 67 66 65 64 63 - - 60 59 58 57 56 - 54 53 - 51 50 49 - - - 45 44 - 42 41 - 39 38 37 36 35 34 33 - 32 31 - 29 28 27 26 25 24 23 - - - - - - - - - 13 12 11 10 9 - 7 - 5 - 3 - 1	SALEABLE		345650003
MX123 CONN ASSY 73 CKT BLU OPT9 KEY C/35	345668533	C-HSG-C9	G-CAP-9-P	TPA-C9	RS	LS	MAL	CPA	MSEAL	RSEAL	72 71 - 69 68 - - - - 63 62 - - 59 58 - 56 55 - 53 - - - - - - 46 - - 43 42 - 40 39 38 - 36 35 - - - - 31 30 29 - - 26 - 24 23 22 21 20 19 - - - - - - - - - 9 8 7 6 5 4 3 2 1	SALEABLE		345650003
MX123 CONN ASSY 73 CKT BLU OPT9 KEY C/35	345668543	C-HSG-C9	G-CAP-9-P	TPA-C9	RS	LS	MAL	CPA	MSEAL	RSEAL	72 - 70 - 68 - - - - 63 62 61 - 59 58 - 56 55 - 53 - - - - - - - - - 43 42 41 40 39 38 - 36 35 - - - 31 30 29 - - 26 25 24 23 22 21 20 19 18 17 - - - - - - - - - - 6 5 4 3 2 1	SALEABLE		345650003
MX123 CONN ASSY 73 CKT GRY OPT0 KEY B/22	345668553	C-HSG-B0	G-CAP-0-P	TPA-B0	RS	LS	MAL	CPA	MSEAL	RSEAL	- 71 70 69 - 67 66 65 64 63 - - - - 58 57 56 - 54 53 - 51 50 49 48 47 - 45 44 - 42 - - 39 38 37 36 35 34 33 - 32 31 30 29 28 27 26 25 24 23 - - - 19 18 17 - - - 13 12 11 10 9 - 7 - 5 - 3 2 1	SALEABLE		345650003
MX123 CONN ASSY 73 CKT BLK OPT0 KEY A/35	345668563	C-HSG-A0	G-CAP-0-P	TPA-A0	RS	LS	MAL	CPA	MSEAL	RSEAL	- 71 - 69 68 - 66 65 64 - 62 61 - - - - - - 54 53 - - 50 49 - - - 45 44 - - 41 - - - - - - 34 33 - 32 31 30 29 - 27 26 25 24 23 - - 20 19 - - - 16 15 14 13 - - 10 - 8 - 6 5 4 3 - -	SALEABLE		345650003
MX123 CONN ASSY 73 CKT GRY OPT0 KEY B/59	345668573	C-HSG-B0	G-CAP-0-P	TPA-B0	RS	LS	MAL	CPA	MSEAL	RSEAL	- - - - - - - - - - 62 - - - 58 - - - 54 53 - - - - - - - - - - 42 - - - - - - - 34 - - - - - - - - - 27 - 25 - - - - - - - 18 17 - - - - - - - - 11 10 - - - - - - - 2 1	SALEABLE		345650003
MX123 CONN ASSY 73 CKT BLU OPT0 KEY C/44	345668583	C-HSG-C0	G-CAP-0-P	TPA-C0	RS	LS	MAL	CPA	MSEAL	RSEAL	- - - - 68 - - - - 63 62 61 - 59 58 57 - 55 - 53 - - - - 48 - - - - 43 42 41 - - - 37 36 35 - 33 - 32 - - 29 - 27 - - - - - - - 20 19 18 - - - - - - - 11 10 - - - - - 4 3 2 1	SALEABLE		345650003
MX123 CONN ASSY 73 CKT GRY OPT0 KEY B/32	345668593	C-HSG-B0	G-CAP-0-P	TPA-B0	RS	LS	MAL	CPA	MSEAL	RSEAL	- 71 70 69 - 67 66 65 64 63 - - - - 58 57 56 - 54 53 - 51 50 49 - - - 45 44 - 42 - - 39 - - - - 34 33 - 32 31 - 29 28 27 26 25 24 23 - - - - - 17 - - - 13 12 11 10 9 - 7 - 5 - 3 2 -	SALEABLE		345650003
MX123 CONN ASSY 73 CKT BLK OPT0 KEY A/47	345668603	C-HSG-A0	G-CAP-0-P	TPA-A0	RS	LS	MAL	CPA	MSEAL	RSEAL	72 71 70 - - 67 - 65 64 63 62 61 60 - 58 - 56 - 54 - 52 51 50 - - 47 - 45 - 43 42 41 40 - - - 36 - 34 - - 32 31 30 - - 27 26 25 24 - 22 - 20 19 - - - 16 15 14 13 - - - 9 8 - 6 5 4 3 2 1	SALEABLE		345650003
MX123 CONN ASSY 73 CKT BLU OPT0 KEY C/43	345668613	C-HSG-C0	G-CAP-0-P	TPA-C0	RS	LS	MAL	CPA	MSEAL	RSEAL	72 - - 69 68 - - - - 63 62 - - - - - 56 55 - 53 - - - 49 - - 46 - - 43 42 - 40 - - - 36 35 - - - - 31 30 29 - - 26 - 24 - 22 21 20 19 - - - - - - - - - - - - 6 5 4 3 2 1	SALEABLE		345650003
MX123 CONN ASSY 73 CKT BLU OPT9 KEY C/31	345668623	C-HSG-C9	G-CAP-9-P	TPA-C9	RS	LS	MAL	CPA	MSEAL	RSEAL	72 71 70 69 - 67 66 - 64 - - - 60 - - - - - 54 - 52 51 50 49 - 47 46 - 44 - - - 40 39 38 - - - - - - - 30 29 28 27 26 25 24 23 22 21 - - - 17 - 16 15 14 13 12 11 10 9 8 7 6 5 - - - -	SALEABLE		345650003
MX123 CONN ASSY 73 CKT GRY OPT0 KEY B/22	345668633	C-HSG-B0	G-CAP-0-P	TPA-B0	RS	LS	MAL	CPA	MSEAL	RSEAL	- 71 70 69 68 67 66 65 64 63 - - 60 59 58 57 56 55 54 53 - 51 50 49 - - - 45 44 - 42 41 - 39 38 37 36 35 34 33 - 32 31 - 29 28 27 26 25 24 23 - - - - - - - - - 13 12 11 10 9 8 7 - 5 - 3 2 1	SALEABLE		345650003

molex

MX123 SEALED RCPT ASSY (73 Ckt)
BOM & PIN OUT SHEET

ASSEMBLY DESCRIPTION	ASSEMBLY PART NUMBER	CONNECTOR HOUSING	GROMMET CAP	TPA	RIGHT SLIDE	LEFT SLIDE	MATE ASSIST LEVER	CPA	MAT SEAL	RING SEAL	BLOCKED TERMINALS CAVITY WITH A NUMBER INDICATES BLOCKED TERMINAL POSITION CAVITY WITHOUT A NUMBER INDICATES OPEN TERMINAL POSITION	STATUS	COMMENTS	INTEGRAL COMPONENTS SOLD SEPARATELY DRESS COVER
MX123 CONN ASSY 73 CKT BLU OPT0 KEY C/37	345668643	C-HSG-C0	G-CAP-0-P	TPA-C0	RS	LS	MAL	CPA	MSEAL	RSEAL	72 - - 69 68 - - 65 - 63 62 - - 59 58 - 56 55 - 53 - - - - - 47 46 - - 43 42 - 40 39 38 - 36 35 - - - - 31 30 29 - - 26 - 24 23 22 21 20 19 - - - - - - - - - - - - 6 5 4 3 2 1	SALEABLE		345650003
MX123 CONN ASSY 73 CKT BLU OPT9 KEY C/36	345668653	C-HSG-C9	G-CAP-9-P	TPA-C9	RS	LS	MAL	CPA	MSEAL	RSEAL	72 - 70 - 68 - - - - - 62 - - 59 58 - 56 55 54 53 - - - 49 - - - - 44 - 42 - 40 39 38 - 36 35 - - 32 31 30 29 - - 26 - 24 23 22 21 20 19 18 17 - - - - - - - - - - 6 5 4 3 2 1	SALEABLE		345650003
MX123 CONN ASSY 73 CKT GRY OPT0 KEY B/46	345668663	C-HSG-B0	G-CAP-0-P	TPA-B0	RS	LS	MAL	CPA	MSEAL	RSEAL	- - - - 68 67 66 65 - - 62 - - 59 - - - - 54 53 - - - - 48 47 46 45 44 - 42 41 40 39 - - - 35 34 - - 31 - - - 27 - - - - - - - - 19 18 17 - - - - - - - - - - - - - - 3 2 1	SALEABLE		345650003
MX123 CONN ASSY 73 CKT NAT OPT0 KEY F/45	345668673	C-HSG-F0	G-CAP-0-P	TPA-F0	RS	LS	MAL	CPA	MSEAL	RSEAL	- 71 - 69 - - - 65 64 - - 61 60 - 58 - 56 55 54 - - - 50 - - - - 45 - 43 42 - - - 38 - - - - - - 31 - 29 28 - - - - 23 - - - 19 18 17 16 - - - 12 11 - - - 7 - - - 3 - 1	SALEABLE		345650003
MX123 CONN ASSY 73 CKT GRY OPT0 KEY B/45	345668683	C-HSG-B0	G-CAP-0-P	TPA-B0	RS	LS	MAL	CPA	MSEAL	RSEAL	- 71 - 69 - - - 65 64 - - 61 60 - 58 - 56 55 54 - - - 50 - - - - 45 - 43 42 - - - 38 - - - - - - 31 - 29 28 - - - - 23 - - - 19 18 17 16 - - - 12 11 - - - 7 - - - 3 - 1	SALEABLE		345650003
MX123 CONN ASSY 73 CKT BLK OPT0 KEY A/45	345668693	C-HSG-A0	G-CAP-0-P	TPA-A0	RS	LS	MAL	CPA	MSEAL	RSEAL	- 71 - 69 - - - 65 64 - - 61 60 - 58 - 56 55 54 - - - 50 - - - - 45 - 43 42 - - - 38 - - - - - - 31 - 29 28 - - - - 23 - - - 19 18 17 16 - - - 12 11 - - - 7 - - - 3 - 1	SALEABLE		345650003
MX123 CONN ASSY 73 CKT GRY OPT0 KEY B/42	345668703	C-HSG-B0	G-CAP-0-P	TPA-B0	RS	LS	MAL	CPA	MSEAL	RSEAL	72 71 70 - - 67 - 65 - 63 62 61 60 - 58 - 56 - 54 - 52 51 - - - - 46 45 - 43 42 41 40 - 38 - 36 - 34 - 32 31 30 - - 27 26 25 24 - 22 - 20 19 18 - 16 - 14 13 - - - 9 8 - - - - - 2 1	SALEABLE		345650003
MX123 CONN ASSY 73 CKT GRY OPT9 KEY B/46	345668713	C-HSG-B9	G-CAP-9-P	TPA-B9	RS	LS	MAL	CPA	MSEAL	RSEAL	- - - - 68 67 66 65 - - 62 - - 59 - - - - 54 53 - - - - 48 47 46 45 44 - 42 41 40 39 - - - 35 34 - - 31 - - - 27 - - - - - - - - 19 18 17 - - - - - - - - - - - - - - 3 2 1	SALEABLE		345650003
MX123 CONN ASSY 73 CKT BLU OPT0 KEY C/36	345668723	C-HSG-C0	G-CAP-0-P	TPA-C0	RS	LS	MAL	CPA	MSEAL	RSEAL	72 - - 69 68 67 - 65 - 63 62 - - 59 58 - 56 55 - 53 - - - - - 47 46 - - 43 42 - 40 39 38 - 36 35 - - - 31 30 29 - - 26 - 24 23 22 21 20 19 - - - - - - - - - - - - 6 5 4 3 2 1	SALEABLE		345650003
MX123 CONN ASSY 73 CKT BLK OPT0 KEY A/49	345668733	C-HSG-A0	G-CAP-0-P	TPA-A0	RS	LS	MAL	CPA	MSEAL	RSEAL	- - - - - 67 - - - - 62 61 - 59 58 - - 55 - 53 - - - - - 47 - - - - - 41 - - - - - 35 - 33 - - - - - 27 26 25 24 - - - - 19 18 17 16 - - - - 11 10 9 8 - - - - - - 1	SALEABLE		345650003
MX123 CONN ASSY 73 CKT BLU OPT0 KEY C/41	345668743	C-HSG-C0	G-CAP-0-P	TPA-C0	RS	LS	MAL	CPA	MSEAL	RSEAL	- - - - 68 - - 65 - 63 62 61 60 59 58 57 56 55 - 53 - - - - 48 - - 45 - 43 42 41 40 - - 37 36 35 34 33 32 31 - - - - - - - - - - - 20 19 18 - - - - - - - - - - - - - - 4 3 2 1	SALEABLE		345650003
MX123 CONN ASSY 73 CKT GRY OPT0 KEY B/56	345668753	C-HSG-B0	G-CAP-0-P	TPA-B0	RS	LS	MAL	CPA	MSEAL	RSEAL	- - - - - - - - - - 62 - - 59 - - - - - - - - - - - - - - - - 42 41 - 39 38 - - - - - - 31 - - - 27 - - - 23 22 - 20 - 18 17 - 15 - - - - - - - 7 - - 4 3 - -	SALEABLE		345650003

molex

MX123 SEALED RCPT ASSY (73 Ckt)
BOM & PIN OUT SHEET

ASSEMBLY DESCRIPTION	ASSEMBLY PART NUMBER	CONNECTOR HOUSING	GROMMET CAP	TPA	RIGHT SLIDE	LEFT SLIDE	MATE ASSIST LEVER	CPA	MAT SEAL	RING SEAL	BLOCKED TERMINALS CAVITY WITH A NUMBER INDICATES BLOCKED TERMINAL POSITION CAVITY WITHOUT A NUMBER INDICATES OPEN TERMINAL POSITION	STATUS	COMMENTS	INTEGRAL COMPONENTS SOLD SEPARATELY DRESS COVER
MX123 CONN ASSY 73 CKT BLK OPT0 KEY A/45	345668763	C-HSG-A0	G-CAP-0-P	TPA-A0	RS	LS	MAL	CPA	MSEAL	RSEAL	- - - 69 68 - - 65 64 63 62 61 60 - - - - - - - - - - - 49 48 - - 45 44 43 42 41 40 - 38 - - - 34 - -: - - - - 25 24 23 22 - 20 19 - - - - - - - - - 9 - - 6 5 4 - - -	SALEABLE		345650003
MX123 CONN ASSY 73 CKT GRY OPT0 KEY B/34	345668803	C-HSG-B0	G-CAP-0-P	TPA-B0	RS	LS	MAL	CPA	MSEAL	RSEAL	72 71 70 69 - - - - 64 63 62 61 60 - - - 56 55 - - 52 - - - - 47 - - 44 - - 41 - - - - 36 35 34 - -: - - - 29 28 27 - 25 - - - 21 - 19 18 17 - 15 14 - 12 11 - - - - - - - 3 2 1	SALEABLE		345650003
MX123 CONN ASSY 73 CKT GRY OPT9 KEY B/61	345668813	C-HSG-B9	G-CAP-9-P	TPA-B9	RS	LS	MAL	CPA	MSEAL	RSEAL	- - - - - - 66 - - - 62 - - - 58 - - - - - - - - - - - - - - - - 41 - - 38 37 - - - - -: - - - - - - - - - - - - 20 19 18 17 - - - - - - - - - - - - - 5 - - - 1	SALEABLE		345650003
MX123 CONN ASSY 73 CKT BLU OPT9 KEY C/49	345668833	C-HSG-C9	G-CAP-9-P	TPA-C9	RS	LS	MAL	CPA	MSEAL	RSEAL	- 71 - 69 - - - 65 64 - - 61 60 - 58 - 56 55 - - - - 50 - - - - 45 - 43 42 - - - 38 - - - - - -: 31 - 29 28 - - - - 23 - - - 19 18 - 16 - - - 12 11 - - - - - - - 3 - -	SALEABLE		345650003
MX123 CONN ASSY 73 CKT GRY OPT0 KEY B/36	345668853	C-HSG-B0	G-CAP-0-P	TPA-B0	RS	LS	MAL	CPA	MSEAL	RSEAL	- 71 70 69 - - 66 65 64 - - - - - 58 57 56 - 54 53 - 51 50 49 - - - 45 - - 42 - - 39 - - - - 34 33 -: 32 31 - 29 28 - 26 25 24 23 - - - - - 17 - 15 - 13 12 - 10 9 - 7 - 5 - 3 2 -	SALEABLE		345650003
MX123 CONN ASSY 73 CKT GRY OPT0 KEY B/44	345668863	C-HSG-B0	G-CAP-0-P	TPA-B0	RS	LS	MAL	CPA	MSEAL	RSEAL	- - - - 68 67 66 65 - - 62 - 60 59 - - - - 54 53 - - - - 48 47 46 45 44 - 42 41 40 39 - - - 35 34 - -: - 31 - - - 27 - - - - - - - 19 18 17 - 15 - - - - - - - - - - - 3 2 1	SALEABLE		345650003
MX123 CONN ASSY 73 CKT GRY OPT0 KEY B/46	345668873	C-HSG-B0	G-CAP-0-P	TPA-B0	RS	LS	MAL	CPA	MSEAL	RSEAL	- - - - 68 67 66 65 - - 62 - 60 59 - - - - 54 53 - - - - 48 47 46 45 44 - 42 41 40 39 - - - 35 34 - -: - - - - - 27 - - - - - - - 19 18 17 - - - - - - - - - - - - - 3 2 1	SALEABLE		345650003
MX123 CONN ASSY 73 CKT BLK OPT0 KEY A/41	345668893	C-HSG-A0	G-CAP-0-P	TPA-A0	RS	LS	MAL	CPA	MSEAL	RSEAL	- 71 - 69 68 - - - 64 - 62 61 - - - - - - 54 53 - - 50 - - - - - 44 - - 41 - - - - - - 34 33 -: 32 31 30 29 - - 26 25 24 - - - 20 19 - - 16 15 14 13 - - 10 - 8 - 6 5 4 3 - -	SALEABLE		345650003
MX123 CONN ASSY 73 CKT BLK OPT0 KEY A/48	345668913	C-HSG-A0	G-CAP-0-P	TPA-A0	RS	LS	MAL	CPA	MSEAL	RSEAL	- - - - - 67 - - - - 62 61 - 59 58 - - 55 - 53 - - - - - 47 - - - - - - - - - - - 35 - 33 -: - - - - - 27 26 25 24 - - - 20 19 18 17 16 - - - - 11 10 9 8 - - - 4 3 - -	SALEABLE		345650003
MX123 CONN ASSY 73 CKT BLK OPT0 KEY A/52	345668923	C-HSG-A0	G-CAP-0-P	TPA-A0	RS	LS	MAL	CPA	MSEAL	RSEAL	72 - - - - - 66 65 - - - - - - 58 - - - - - - - - - 48 47 - - - - - - - - - - - 35 - 33 -: - 31 30 - - - - - 24 23 22 - 20 19 - 17 - - - - - - - - - - 7 6 - 4 - 2 1	SALEABLE		345650003
MX123 CONN ASSY 73 CKT GRY OPT0 KEY B/24	345668943	C-HSG-B0	G-CAP-0-P	TPA-B0	RS	LS	MAL	CPA	MSEAL	RSEAL	- 71 70 69 - 67 66 65 64 63 - - 60 59 58 57 56 - 54 53 - 51 50 49 48 47 - 45 44 - 42 41 - 39 38 37 36 35 34 33 -: 32 31 30 29 28 27 26 25 24 23 - - - - - - - - - 13 12 11 10 9 - 7 - 5 - - - 1	SALEABLE		345650003
MX123 CONN ASSY 73 CKT BLU OPT9 KEY C/43	345668953	C-HSG-C9	G-CAP-9-P	TPA-C9	RS	LS	MAL	CPA	MSEAL	RSEAL	- - - - 68 - - 65 - 63 62 61 - 59 58 57 56 55 - 53 - - - - 48 - - 45 - 43 42 41 - - - 37 36 35 34 33 -: 32 31 - - - - - - - - - - 20 19 18 - - - - - - - - - - - - - 4 3 2 1	SALEABLE		345650003

molex

MX123 SEALED RCPT ASSY (73 Ckt)
BOM & PIN OUT SHEET

ASSEMBLY DESCRIPTION	ASSEMBLY PART NUMBER	CONNECTOR HOUSING	GROMMET CAP	TPA	RIGHT SLIDE	LEFT SLIDE	MATE ASSIST LEVER	CPA	MAT SEAL	RING SEAL	BLOCKED TERMINALS CAVITY WITH A NUMBER INDICATES BLOCKED TERMINAL POSITION CAVITY WITHOUT A NUMBER INDICATES OPEN TERMINAL POSITION	STATUS	COMMENTS	INTEGRAL COMPONENTS SOLD SEPARATELY DRESS COVER
MX123 CONN ASSY 73 CKT GRY OPT0 KEY B/31	345668963	C-HSG-B0	G-CAP-0-P	TPA-B0	RS	LS	MAL	CPA	MSEAL	RSEAL	- 71 70 69 68 67 66 65 64 63 - - - - 58 57 56 - 54 53 - 51 50 49 - - - 45 44 - 42 - - 39 - - - - 34 33 - 32 31 - 29 28 27 26 25 24 23 - - - - - - - - - 13 12 11 10 9 8 7 - 5 - 3 2 -	SALEABLE		345650003
MX123 CONN ASSY 73 CKT BLK OPT0 KEY A/47	345668973	C-HSG-A0	G-CAP-0-P	TPA-A0	RS	LS	MAL	CPA	MSEAL	RSEAL	- - - - - 67 - - - - 62 61 - 59 58 - - 55 - 53 - - - - - 47 - - - - - 41 - - - - - 35 - 33 - - - - - - - - - 27 26 25 24 - - - 20 19 18 - 16 - - - - 11 10 9 8 - - - 4 3 - 1	SALEABLE		345650003
MX123 CONN ASSY 73 CKT BLU OPT0 KEY C/38	345668983	C-HSG-C0	G-CAP-0-P	TPA-C0	RS	LS	MAL	CPA	MSEAL	RSEAL	72 - - 69 68 - - 65 - 63 62 - - 59 58 - 56 55 - 53 - - - - - - 46 - - 43 42 - 40 39 38 - 36 35 - - - 31 30 29 - - 26 - 24 23 22 21 20 19 - - - - - - - - - - - - 6 5 4 3 2 1	SALEABLE		345650003
MX123 CONN ASSY 73 CKT GRY OPT0 KEY B/50	345669003	C-HSG-B0	G-CAP-0-P	TPA-B0	RS	LS	MAL	CPA	MSEAL	RSEAL	72 71 70 - - 67 - 65 64 63 62 61 60 - 58 - 56 - 54 - 52 51 50 - - 47 - 45 - 43 42 41 40 - 38 - 36 - 34 - - 32 31 30 - - 27 26 25 24 - 22 - 20 19 - 17 16 15 14 13 12 - - 9 8 - 6 5 4 3 2 1	SALEABLE		345650003
MX123 CONN ASSY 73 CKT BLK OPT0 KEY A/29	345669013	C-HSG-A0	G-CAP-0-P	TPA-A0	RS	LS	MAL	CPA	MSEAL	RSEAL	72 71 70 - - 67 66 - - - - - - 59 58 57 56 55 54 53 52 51 50 - - 47 46 - - - - - - 39 - 37 36 35 - 33 - 32 31 30 29 28 27 26 - - - - 21 - - 18 17 16 15 14 13 12 11 10 - 8 7 - - - 3 2 1	SALEABLE		345650003
MX123 CONN ASSY 73 CKT GRY OPT0 KEY B/18	345669023	C-HSG-B0	G-CAP-0-P	TPA-B0	RS	LS	MAL	CPA	MSEAL	RSEAL	72 71 70 69 68 67 66 65 64 63 - 61 60 - 58 57 56 55 54 53 52 51 50 49 48 47 46 45 44 43 - - 40 - - 37 36 35 34 33 - 32 - 30 29 28 - 26 25 24 - - 21 - 19 - - 16 - 14 13 12 11 10 9 8 - 6 5 - - 2 1	SALEABLE		345650003
MX123 CONN ASSY 73 CKT BLU OPT0 KEY C/43	345669033	C-HSG-C0	G-CAP-0-P	TPA-C0	RS	LS	MAL	CPA	MSEAL	RSEAL	- 71 - 69 68 - 66 65 64 - 62 61 - - - - - - 54 53 - - - - 48 - - - - 43 42 41 40 - - 37 36 35 - 33 - 32 - - - 27 - - - - - - 20 19 18 - - - - - - 11 10 - - - - - 4 3 2 1	SALEABLE		345650003
MX123 CONN ASSY 73 CKT BLU OPT0 KEY C/40	345669043	C-HSG-C0	G-CAP-0-P	TPA-C0	RS	LS	MAL	CPA	MSEAL	RSEAL	- - - - 68 - - - - 63 62 61 60 59 58 57 56 55 - 53 - - - - 48 - - - - 43 42 41 40 - - 37 36 35 34 33 - 32 31 - - - 27 - - - - - - 20 19 18 - - - - - - 11 10 - - - - - 4 3 2 1	SALEABLE		345650003
MX123 CONN ASSY 73 CKT BLU OPT0 KEY C/49	345669053	C-HSG-C0	G-CAP-0-P	TPA-C0	RS	LS	MAL	CPA	MSEAL	RSEAL	- - - - - 67 - - - 63 62 - - 59 58 - - 55 - - - - - - - 47 - - - - - 41 - - - - - 35 - - - 32 - - - 27 26 25 24 - - - - 19 18 17 - 16 - - - 11 10 9 8 - - - - 3 - 1	SALEABLE		345650003
MX123 CONN ASSY 73 CKT GRY OPT0 KEY B/26	345669063	C-HSG-B0	G-CAP-0-P	TPA-B0	RS	LS	MAL	CPA	MSEAL	RSEAL	- 71 70 69 - 67 66 65 64 63 - - - - 58 57 56 - 54 53 - 51 50 49 48 47 - 45 - - 42 - - 39 38 37 36 35 34 33 - 32 31 30 29 28 27 26 25 24 23 - - - - - - - - - 13 12 11 10 9 - 7 - 5 - 3 2 1	SALEABLE		345650003
MX123 CONN ASSY 73 CKT GRY OPT0 KEY B/64	345669073	C-HSG-B0	G-CAP-0-P	TPA-B0	RS	LS	MAL	CPA	MSEAL	RSEAL	- - - - - - - - - - 62 - - - 58 - - - 54 53 - - - - - - - - - - 42 - - - - - - - - - - - - - - 27 - 25 - - - - - - - - - - - - - 11 10 - - - - - - - - -	SALEABLE		345650003
MX123 CONN ASSY 73 CKT BLK OPT0 KEY A/36	345669083	C-HSG-A0	G-CAP-0-P	TPA-A0	RS	LS	MAL	CPA	MSEAL	RSEAL	- 71 - 69 68 - 66 65 64 - 62 61 - - - - - - 54 53 - - 50 49 - - - 45 44 - - 41 - - - - - - 34 33 - 32 31 30 29 - - 26 25 24 23 - - 20 19 - - - 16 15 14 13 - - 10 - 8 - 6 5 4 3 - -	SALEABLE		345650003

molex

MX123 SEALED RCPT ASSY (73 Ckt)
BOM & PIN OUT SHEET

ASSEMBLY DESCRIPTION	ASSEMBLY PART NUMBER	CONNECTOR HOUSING	GROMMET CAP	TPA	RIGHT SLIDE	LEFT SLIDE	MATE ASSIST LEVER	CPA	MAT SEAL	RING SEAL	BLOCKED TERMINALS CAVITY WITH A NUMBER INDICATES BLOCKED TERMINAL POSITION CAVITY WITHOUT A NUMBER INDICATES OPEN TERMINAL POSITION	STATUS	COMMENTS	INTEGRAL COMPONENTS SOLD SEPARATELY DRESS COVER
MX123 CONN ASSY 73 CKT BLK OPT0 KEY A/35	345669093	C-HSG-A0	G-CAP-0-P	TPA-A0	RS	LS	MAL	CPA	MSEAL	RSEAL	- 71 - 69 68 - 66 65 64 - 62 61 - - - - - - 54 53 - - 50 49 - - - 45 44 - - 41 - - - - - - 34 33 - 32 31 30 29 - - 26 25 24 23 - - 20 19 - - 16 15 14 13 - - 10 - 8 7 6 5 4 3 - -	SALEABLE		345650003
MX123 CONN ASSY 73 CKT BLK OPT0 KEY A/30	345669103	C-HSG-A0	G-CAP-0-P	TPA-A0	RS	LS	MAL	CPA	MSEAL	RSEAL	72 71 70 69 - 67 66 - 64 - 62 - 60 - - 57 - 55 54 - - - - 49 48 - 46 45 44 43 42 - 40 39 - - - - - - - - - - - - 26 - - - - - - - - - - - - - - - - - 8 7 6 5 4 3 2 -	SALEABLE		345650003
MX123 CONN ASSY 73 CKT BLK OPT0 KEY A/50	345669113	C-HSG-A0	G-CAP-0-P	TPA-A0	RS	LS	MAL	CPA	MSEAL	RSEAL	- - - - - 67 - - - 63 62 - - 59 58 - - 55 - - - - - - - 47 - - - - - 41 - - - - - 35 - - - 32 - - - - 27 26 25 24 - - - - 19 18 17 16 - - - - 11 - 9 8 - - - - 3 - 1	SALEABLE		345650003
MX123 CONN ASSY 73 CKT NAT OPT9 KEY F/57	345669143	C-HSG-F9	G-CAP-9-P	TPA-F9	RS	LS	MAL	CPA	MSEAL	RSEAL	- - - 69 68 - - - - - - - - - 58 57 - - - - - - - - - - - - - 43 42 - - - 38 37 - - - 33 - - - 30 - - - - - - - - - - - 19 18 17 - - - - - - - - - - - - - - - 3 2 1	SALEABLE		345650003
MX123 CONN ASSY 73 CKT GRY OPT9 KEY B/14	345669153	C-HSG-B9	G-CAP-9-P	TPA-B9	RS	LS	MAL	CPA	MSEAL	RSEAL	72 71 70 69 68 67 - 65 64 63 - 61 60 59 - 57 56 55 54 53 52 51 50 49 48 47 46 45 44 43 42 - 40 39 - - 36 35 34 33 - 32 31 30 29 28 27 26 25 24 23 22 21 - - - - 16 15 14 13 12 11 10 9 - 7 6 - 4 3 2 -	SALEABLE		345650003
MX123 CONN ASSY 73 CKT GRY OPT9 KEY B/30	345669163	C-HSG-B9	G-CAP-9-P	TPA-B9	RS	LS	MAL	CPA	MSEAL	RSEAL	72 71 70 69 - - - - 64 63 - 61 - - 58 57 56 55 - - 52 51 50 49 - - - - - 43 - - - - 38 37 36 - - 33 - 32 - 30 29 28 - 26 25 24 23 22 21 20 - - - 16 - 14 13 12 11 10 9 8 7 6 5 4 - - -	SALEABLE		345650003
MX123 CONN ASSY 73 CKT GRY OPT0 KEY B/12	345669173	C-HSG-B0	G-CAP-0-P	TPA-B0	RS	LS	MAL	CPA	MSEAL	RSEAL	72 71 70 69 68 67 66 - 64 63 - 61 60 59 - 57 56 55 54 53 52 51 50 49 48 47 46 45 44 43 42 - 40 39 - - 36 35 34 33 - 32 31 30 29 28 27 26 25 24 23 22 21 20 - - - 16 15 14 13 12 11 10 9 8 7 6 - 4 3 2 -	SALEABLE		345650003
MX123 CONN ASSY 73 CKT GRY OPT9 KEY B/62	345669183	C-HSG-B9	G-CAP-9-P	TPA-B9	RS	LS	MAL	CPA	MSEAL	RSEAL	- - - - - - 66 - - - - - - - 58 - - - - - - - - - - - - - - - - 41 - - 38 37 - - - - - - - - - - - - - - - - - - - 20 - 18 17 - - - - - - - - 8 - - 5 - - - 1	SALEABLE		345650003
MX123 CONN ASSY 73 CKT NAT OPT9 KEY F/18	345669193	C-HSG-F9	G-CAP-9-P	TPA-F9	RS	LS	MAL	CPA	MSEAL	RSEAL	72 71 70 - - 67 66 65 64 63 62 61 60 59 - - 56 55 54 53 52 51 50 49 48 47 46 45 44 - - 41 40 39 - - 36 35 34 - - 32 31 - 29 28 27 26 25 24 23 22 21 20 - - - 16 15 14 13 12 11 10 9 - 7 6 5 4 - - -	SALEABLE		345650003
MX123 CONN ASSY 73 CKT BLK OPT0 KEY A/24	345669203	C-HSG-A0	G-CAP-0-P	TPA-A0	RS	LS	MAL	CPA	MSEAL	RSEAL	- - - - - - - 65 - - - 61 - - 58 57 56 - - - - 51 50 - - 47 46 45 - - - 41 - - - 37 36 - - - - 32 31 - - - - 26 25 - - 22 21 20 - - - - 15 14 - - - 10 - - - - - - - - -	SALEABLE		345650003
MX123 CONN ASSY 73 CKT GRY OPT0 KEY B/46	345669213	C-HSG-B0	G-CAP-0-P	TPA-B0	RS	LS	MAL	CPA	MSEAL	RSEAL	72 71 70 69 - - - - - 63 62 61 60 - - - 56 - - - 52 - - - - 47 - - 44 - - - - - - - 36 - 34 - - - - 29 28 27 - 25 - - - 21 - 19 18 17 - 15 14 - 12 11 - - - - - - - - - 1	SALEABLE		345650003
MX123 CONN ASSY 73 CKT GRY OPT9 KEY B/30	345669223	C-HSG-B9	G-CAP-9-P	TPA-B9	RS	LS	MAL	CPA	MSEAL	RSEAL	- 71 70 69 68 67 66 65 64 63 - - - - 58 57 56 - 54 53 - 51 50 49 - - - 45 44 43 42 - - 39 - - - - 34 33 - 32 31 - 29 28 27 26 25 24 23 - - - - - 17 - - - 13 12 11 10 9 8 7 - 5 - - 2 -	SALEABLE		345650003

molex

MX123 SEALED RCPT ASSY (73 Ckt)
BOM & PIN OUT SHEET

ASSEMBLY DESCRIPTION	ASSEMBLY PART NUMBER	CONNECTOR HOUSING	GROMMET CAP	TPA	RIGHT SLIDE	LEFT SLIDE	MATE ASSIST LEVER	CPA	MAT SEAL	RING SEAL	BLOCKED TERMINALS CAVITY WITH A NUMBER INDICATES BLOCKED TERMINAL POSITION CAVITY WITHOUT A NUMBER INDICATES OPEN TERMINAL POSITION	STATUS	COMMENTS	INTEGRAL COMPONENTS SOLD SEPARATELY DRESS COVER
MX123 CONN ASSY 73 CKT BLU OPT9 KEY C/40	345669233	C-HSG-C9	G-CAP-9-P	TPA-C9	RS	LS	MAL	CPA	MSEAL	RSEAL	72 - 70 69 68 - 66 - - 63 62 - - - 58 - 56 55 - 53 - - - 49 - - 46 - - 43 42 - 40 - 38 - 36 35 - - - - 31 30 29 - - 26 - 24 - 22 21 20 19 - 17 - - - - - - - - - - - - 4 3 2 1	SALEABLE		345650003
MX123 CONN ASSY 73 CKT GRY OPT9 KEY B/44	345669243	C-HSG-B9	G-CAP-9-P	TPA-B9	RS	LS	MAL	CPA	MSEAL	RSEAL	- - - - 68 67 66 65 - - 62 - 60 59 - - - - 54 53 - - - - 48 47 46 45 44 - 42 41 40 39 - - - 35 34 - - 31 - - - 27 - - - - - - - 19 18 17 - 15 - - - - - - - - - - - 3 2 1	SALEABLE		345650003
MX123 CONN ASSY 73 CKT GRY OPT9 KEY B/61	345669253	C-HSG-B9	G-CAP-9-P	TPA-B9	RS	LS	MAL	CPA	MSEAL	RSEAL	- - - - - - 66 - - - - - - - 58 - - - - - - - - - - - - - - - - 41 - - 38 37 - - - - - - - - - - - - - - - - 20 19 18 17 - - - - - - - - 8 - - 5 - - - 1	SALEABLE		345650003
MX123 CONN ASSY 73 CKT GRY OPT9 KEY B/22	345669263	C-HSG-B9	G-CAP-9-P	TPA-B9	RS	LS	MAL	CPA	MSEAL	RSEAL	- 71 70 69 - 67 66 65 64 63 - - - - 58 57 56 - 54 53 - 51 50 49 48 47 - 45 44 - 42 - - 39 38 37 36 35 34 33 32 31 30 29 28 27 26 25 24 23 - - - 19 18 17 - - - 13 12 11 10 9 - 7 - 5 - 3 2 1	SALEABLE		345650003
MX123 CONN ASSY 73 CKT GRY OPT9 KEY B/57	345669273	C-HSG-B9	G-CAP-9-P	TPA-B9	RS	LS	MAL	CPA	MSEAL	RSEAL	- - - - - - 66 - - - 62 - - - 58 - - - - - 52 51 - - - - - 45 - - - 41 - - 38 37 - - - - - - - - - - - - - - - - 20 19 18 17 - - - - - - - - 8 - - 5 - - - 1	SALEABLE		345650003
MX123 CONN ASSY 73 CKT BLK OPT0 KEY A/14	345669303	C-HSG-A0	G-CAP-0-P	TPA-A0	RS	LS	MAL	CPA	MSEAL	RSEAL	- - 70 - - - - 65 - - - 61 60 - - - - - - - - - - - - - - 45 - - - 41 40 - - - - - - - - - - 28 - 26 25 - - - - - - 18 - 16 - - - - - 10 - - - - - - - - -	SALEABLE		345650003
MX123 CONN ASSY 73 CKT BLK OPT9 KEY A/33	345669313	C-HSG-A9	G-CAP-9-P	TPA-A9	RS	LS	MAL	CPA	MSEAL	RSEAL	- 71 70 69 68 67 66 65 - 63 - - 60 59 - - - - - - - - 50 49 - 47 - - 44 - 42 - - 39 38 - 36 35 34 33 - 31 - - 28 - 26 - 24 23 22 21 - 19 18 17 - - 14 - 12 - - - 8 7 6 5 - 3 2 1	SALEABLE		345650003
MX123 CONN ASSY 73 CKT BLK OPT9 KEY A/35	345669333	C-HSG-A9	G-CAP-9-P	TPA-A9	RS	LS	MAL	CPA	MSEAL	RSEAL	- 71 70 69 68 67 66 65 - 63 - - 60 - - - - - - 53 - - 50 49 - 47 - - 44 - 42 - - 39 38 - 36 - - 33 - 31 - - 28 - 26 - 24 23 22 21 - 19 18 17 - - 14 - 12 - - - 8 7 6 5 - 3 2 1	SALEABLE		345650003
MX123 CONN ASSY 73 CKT BLU OPT9 KEY C/34	345669343	C-HSG-C9	G-CAP-9-P	TPA-C9	RS	LS	MAL	CPA	MSEAL	RSEAL	- 71 - - - 67 - 65 64 - - 61 60 59 - 57 - - 54 - 52 51 50 - 48 47 - 45 44 - - 41 - 39 - 37 - - 34 33 32 - - - 28 27 - 25 - 23 - - - - 18 - 16 15 14 13 12 11 10 9 8 7 6 5 - - - -	SALEABLE		345650003
MX123 CONN ASSY 73 CKT BLK OPT9 KEY A/35	345669353	C-HSG-A9	G-CAP-9-P	TPA-A9	RS	LS	MAL	CPA	MSEAL	RSEAL	- 71 70 69 68 67 66 65 - 63 - - 60 59 - - - - - - - - 50 49 - 47 - - 44 - 42 - - 39 38 - 36 - - 33 - 31 - - 28 - 26 - 24 23 22 21 - 19 18 17 - - 14 - 12 - - - 8 7 6 5 - 3 2 1	SALEABLE		345650003
MX123 CONN ASSY 73 CKT BLK OPT9 KEY A/32	345669363	C-HSG-A9	G-CAP-9-P	TPA-A9	RS	LS	MAL	CPA	MSEAL	RSEAL	- 71 70 69 68 67 66 65 - 63 - - 60 59 58 - - - - - - - 50 49 48 47 - - 44 - 42 41 - 39 38 - 36 - - 33 - 31 - - 28 - 26 - 24 23 22 21 - 19 18 17 - - 14 - 12 - - - 8 7 6 5 - 3 2 1	SALEABLE		345650003
MX123 CONN ASSY 73 CKT BLK OPT9 KEY A/59	345669383	C-HSG-A9	G-CAP-9-P	TPA-A9	RS	LS	MAL	CPA	MSEAL	RSEAL	- - - - - 67 66 65 - - - - 60 - - - - - - - - - - 49 - - - - - - 42 - - - - - 36 - - - - 31 - - 28 - - - - 23 22 21 - - - - - - - - - - - - - - 6 5 - - - -	SALEABLE		345650003

ER NO

DATE 06/03/2025

DOCUMENT NO. 345667301

REVISION BP

molex

MX123 SEALED RCPT ASSY (73 Ckt)
BOM & PIN OUT SHEET

ASSEMBLY DESCRIPTION	ASSEMBLY PART NUMBER	CONNECTOR HOUSING	GROMMET CAP	TPA	RIGHT SLIDE	LEFT SLIDE	MATE ASSIST LEVER	CPA	MAT SEAL	RING SEAL	BLOCKED TERMINALS CAVITY WITH A NUMBER INDICATES BLOCKED TERMINAL POSITION CAVITY WITHOUT A NUMBER INDICATES OPEN TERMINAL POSITION	STATUS	COMMENTS	INTEGRAL COMPONENTS SOLD SEPARATELY DRESS COVER
MX123 CONN ASSY 73 CKT GRY OPT0 KEY B/62	345669393	C-HSG-B0	G-CAP-0-P	TPA-B0	RS	LS	MAL	CPA	MSEAL	RSEAL	- - - - - - 66 - - - 62 - - - 58 - - - - - - - - - - - - - - - - 41 - - 38 37 - 19 18 17 - - - - - - - - - - - - - - - - - 5 - - - 1	SALEABLE		345650003
MX123 CONN ASSY 73 CKT GRY OPT0 KEY B/32	345669403	C-HSG-B0	G-CAP-0-P	TPA-B0	RS	LS	MAL	CPA	MSEAL	RSEAL	72 71 70 69 - - - - 64 63 62 61 60 - - - 56 55 - - 52 - - - - 47 - - 44 - - - - - - - 36 - 34 - - - - - 29 28 27 - 25 - - - 21 - 19 18 17 - 15 14 - 12 11 - - - - - - - 3 2 1	SALEABLE		345650003
MX123 CONN ASSY 73 CKT BLK OPT0 KEY A/43	345669423	C-HSG-A0	G-CAP-0-P	TPA-A0	RS	LS	MAL	CPA	MSEAL	RSEAL	- - - 69 68 - - 65 64 63 62 61 60 59 - - - - - - - - - 49 48 - - 45 44 43 42 41 40 - 38 - - - 34 - - - - - - - - - 25 24 23 22 21 20 19 - - - - - - - - - 9 - - 6 5 4 - - -	SALEABLE		345650003
MX123 CONN ASSY 73 CKT GRY OPT9 KEY B/58	345669443	C-HSG-B9	G-CAP-9-P	TPA-B9	RS	LS	MAL	CPA	MSEAL	RSEAL	- - - - - - 66 - - - - - - - 58 - - - - - 52 51 - - - - - 45 - - - 41 - - 38 37 - - - - - - - - - - - - - - - - - - 20 19 18 17 - - - - - - - - - - 8 - - 5 - - - 1	SALEABLE		345650003
MX123 CONN ASSY 73 CKT BLK OPT0 KEY A/50	345669453	C-HSG-A0	G-CAP-0-P	TPA-A0	RS	LS	MAL	CPA	MSEAL	RSEAL	- - - - 68 - 66 65 - 63 62 - - - 58 - - - - - - - 50 49 - 47 46 - - 43 42 - - - - - - - - 33 - 32 - - - 28 - - - 24 23 - 21 20 - - 17 - - - - - - - - - - - - 4 3 - 1	SALEABLE		345650003
MX123 CONN ASSY 73 CKT BLK OPT0 KEY A/31	345669503	C-HSG-A0	G-CAP-0-P	TPA-A0	RS	LS	MAL	CPA	MSEAL	RSEAL	- - - - - 67 66 - - - 62 - 60 - - - - 55 54 53 - - 50 - 48 - 46 45 44 43 42 - 40 39 - - - 35 - - - - - - - - - 26 25 - - 22 21 - - - - - 15 14 - - - - - 8 7 6 5 4 3 2 -	SALEABLE		345650003
MX123 CONN ASSY 73 CKT BLK OPT0 KEY A/35	345669543	C-HSG-A0	G-CAP-0-P	TPA-A0	RS	LS	MAL	CPA	MSEAL	RSEAL	72 71 70 69 68 67 66 65 64 63 62 61 60 59 58 57 56 55 54 53 52 51 50 - - - - - - - 42 41 - 39 - - - 35 - 33 - - - 30 - - - 26 - - - - 21 - - - - - - 14 13 - 11 - - 8 7 - - 4 3 - -	SALEABLE		345650003
MX123 CONN ASSY 73 CKT BLU OPT0 KEY C/55	345669553	C-HSG-C0	G-CAP-0-P	TPA-C0	RS	LS	MAL	CPA	MSEAL	RSEAL	72 71 70 69 68 67 - - - - - 61 - - 58 - - - - - - - - - - - - - 44 43 - 41 40 - 38 - - - - - - - 31 - - - - - - - - - 21 20 - - - - - - - - - - - - - - 5 4 - - -	SALEABLE		345650003
MX123 CONN ASSY 73 CKT BLU OPT0 KEY C/47	345669563	C-HSG-C0	G-CAP-0-P	TPA-C0	RS	LS	MAL	CPA	MSEAL	RSEAL	- - - - 68 - - - - 63 62 61 - 59 58 57 - 55 - 53 - - - - - - - - - 43 42 41 - - - 37 36 35 - 33 - 32 - - 29 - 27 - - - - - - - 19 18 - - - - - - 11 10 - - - - - - 3 2 1	SALEABLE		345650003
MX123 CONN ASSY 73 CKT GRY OPT0 KEY B/61	345669573	C-HSG-B0	G-CAP-0-P	TPA-B0	RS	LS	MAL	CPA	MSEAL	RSEAL	- - - - - - 66 - - - 62 - - - 58 - - - - - - - - - - - - - - - - 41 - - 38 37 - - - - - - - - - - - - - - - - - - 20 19 18 17 - - - - - - - - - - - - - 5 - - - 1	SALEABLE		345650003
MX123 CONN ASSY 73 CKT GRY OPT0 KEY B/65	345669583	C-HSG-B0	G-CAP-0-P	TPA-B0	RS	LS	MAL	CPA	MSEAL	RSEAL	- - - - - - - - - - 62 - - - 58 - - - - 53 - - - - - - - - - - 42 - - - - - - - - - - - - - - - 27 - 25 - - - - - - - - - - - - - 11 10 - - - - - - - - -	SALEABLE		345650003
MX123 CONN ASSY 73 CKT BLK OPT0 KEY A/33	345669593	C-HSG-A0	G-CAP-0-P	TPA-A0	RS	LS	MAL	CPA	MSEAL	RSEAL	- 71 - 69 68 - 66 65 64 - 62 61 - - - - - - 54 53 - - 50 49 - - 46 45 44 - - 41 - - - - - - 34 33 - 32 31 30 29 - - 26 25 24 23 22 21 20 19 - - 16 15 14 13 - - 10 - 8 - 6 5 4 3 - -	SALEABLE		345650003

ER NO

DATE 06/03/2025

DOCUMENT NO. 345667301

REVISION BP

molex

MX123 SEALED RCPT ASSY (73 Ckt)
BOM & PIN OUT SHEET

ASSEMBLY DESCRIPTION	ASSEMBLY PART NUMBER	CONNECTOR HOUSING	GROMMET CAP	TPA	RIGHT SLIDE	LEFT SLIDE	MATE ASSIST LEVER	CPA	MAT SEAL	RING SEAL	BLOCKED TERMINALS CAVITY WITH A NUMBER INDICATES BLOCKED TERMINAL POSITION CAVITY WITHOUT A NUMBER INDICATES OPEN TERMINAL POSITION	STATUS	COMMENTS	INTEGRAL COMPONENTS SOLD SEPARATELY DRESS COVER
MX123 CONN ASSY 73 CKT BLK OPT0 KEY A/28	345669603	C-HSG-A0	G-CAP-0-P	TPA-A0	RS	LS	MAL	CPA	MSEAL	RSEAL	72 - - - - 67 - - - - 62 - 60 - - - - 55 54 53 - 51 - - 48 - 46 45 44 43 42 - 40 39 - - - - - - - - - - - - - - - 26 25 - - 22 21 - - - - - - - - - - - - 8 7 6 5 4 3 2 -	SALEABLE		345650003
MX123 CONN ASSY 73 CKT BLU OPT0 KEY C/45	345669613	C-HSG-C0	G-CAP-0-P	TPA-C0	RS	LS	MAL	CPA	MSEAL	RSEAL	72 - - - 68 - - - - 63 62 61 - 59 58 57 - 55 54 53 - - - - 48 - - - - 43 42 41 - - 38 37 36 35 - 33 - - - - 32 - - 29 - 27 - - - - - - - - - - - - - - - - - 11 10 - - - - - - 3 2 1	SALEABLE		345650003
MX123 CONN ASSY 73 CKT GRY OPT9 KEY B/40	345669623	C-HSG-B9	G-CAP-9-P	TPA-B9	RS	LS	MAL	CPA	MSEAL	RSEAL	- - - 69 68 67 66 65 - - 62 - 60 59 - - - - 54 53 - - - 49 48 47 46 45 44 - 42 41 40 39 - - - 35 34 33 - - - - 31 - - - 27 - - - - - - - 19 18 17 - - - - 15 - - 12 - - - - - - - - 3 2 1	SALEABLE		345650003
MX123 CONN ASSY 73 CKT GRY OPT9 KEY B/60	345669633	C-HSG-B9	G-CAP-9-P	TPA-B9	RS	LS	MAL	CPA	MSEAL	RSEAL	- - - - - - 66 - - - 62 - - - 58 - - - - - - - - - - - - - - - - 41 - - 38 37 - 19 18 17 - - - - - - - - - - - 8 - - 5 4 - - 1	SALEABLE		345650003
MX123 CONN ASSY 73 CKT BLK OPT9 KEY A/20	345669643	C-HSG-A9	G-CAP-9-P	TPA-A9	RS	LS	MAL	CPA	MSEAL	RSEAL	72 71 70 - 68 67 66 65 - - 62 - 60 - 58 57 56 55 54 53 - 51 50 49 - 47 46 45 - - 42 - 40 - - 37 36 - - 33 - - - - 32 31 - - 28 27 26 25 24 23 22 21 20 19 18 17 - - - - 16 15 14 13 12 11 - 9 8 7 6 - 4 3 - 1	SALEABLE		345650003
MX123 CONN ASSY 73 CKT GRY OPT0 KEY B/52	345669663	C-HSG-B0	G-CAP-0-P	TPA-B0	RS	LS	MAL	CPA	MSEAL	RSEAL	- - - - - - - - - - 62 - 60 59 - - - - - - - - - - - - - - - 43 42 41 - 39 38 - - - - - - - - - - 31 - - - 27 - - - 23 22 - 20 19 18 17 - - - - 15 - - - 11 - - - 7 - - 4 3 - -	SALEABLE		345650003
MX123 CONN ASSY 73 CKT BLU OPT0 KEY C/46	345669673	C-HSG-C0	G-CAP-0-P	TPA-C0	RS	LS	MAL	CPA	MSEAL	RSEAL	- - - - 68 - - - - 63 62 61 - 59 58 57 - 55 - 53 - - - - 48 - - - - 43 42 41 - - - 37 36 35 - 33 - - - - 32 - - 29 - 27 - - - - - - - 19 18 - - - - - - - - - 11 10 - - - - - - 3 2 1	SALEABLE		345650003
MX123 CONN ASSY 73 CKT GRY OPT0 KEY B/60	345669683	C-HSG-B0	G-CAP-0-P	TPA-B0	RS	LS	MAL	CPA	MSEAL	RSEAL	- - - - - - - - - - 62 - - 59 58 - - - - 53 - - - - - - - - - - 42 - - 39 - - - - 34 - - - - - - - - - 27 - 25 - - - - - - 18 - - - - - - - - - 11 10 - - - - - - - 2 -	SALEABLE		345650003
MX123 CONN ASSY 73 CKT BLK OPT0 KEY A/32	345669693	C-HSG-A0	G-CAP-0-P	TPA-A0	RS	LS	MAL	CPA	MSEAL	RSEAL	- 71 - 69 68 - 66 65 64 - 62 61 - - - - - - 54 - - - 50 49 - - 46 45 44 - - 41 - - - - - - 34 - - - - - 32 31 30 29 - 27 26 25 24 23 22 21 20 19 - - - - - - 16 15 14 13 - - 10 9 8 7 6 5 4 3 - -	SALEABLE		345650003
MX123 CONN ASSY 73 CKT BLK OPT0 KEY A/30	345669703	C-HSG-A0	G-CAP-0-P	TPA-A0	RS	LS	MAL	CPA	MSEAL	RSEAL	- - - - - 67 66 - - - 62 - 60 - 58 - - 55 54 53 - - - - 48 - 46 45 44 43 42 - 40 39 - - - 35 - - - - - - - - - - - - 26 25 - - 22 21 - - - 17 - - - - - 15 14 - - - - - 8 7 6 5 4 - - -	SALEABLE		345650003
MX123 CONN ASSY 73 CKT BLU OPT0 KEY C/45	345669753	C-HSG-C0	G-CAP-0-P	TPA-C0	RS	LS	MAL	CPA	MSEAL	RSEAL	- - - - 68 - - - - 63 62 61 - 59 58 57 - 55 - 53 - - - - 48 - - - - 43 - - - - 38 37 36 35 34 33 - - - - 32 - - 29 - 27 - - - - - - - 19 18 17 - - - - - - - - 11 10 - - - - - - 3 2 1	SALEABLE		345650003
MX123 CONN ASSY 73 CKT BLK OPT0 KEY A/33	345669773	C-HSG-A0	G-CAP-0-P	TPA-A0	RS	LS	MAL	CPA	MSEAL	RSEAL	- - - 69 68 - - 65 64 63 62 61 60 - 58 57 56 55 54 - - - - 49 48 - - 45 44 43 42 41 40 - 38 - 36 - 34 - - - - - 32 31 - - - - - 25 24 23 22 - 20 19 18 - - - - - - 15 14 - - - - 9 - - 6 5 4 - 2 -	SALEABLE		345650003

molex

MX123 SEALED RCPT ASSY (73 Ckt)
BOM & PIN OUT SHEET

ASSEMBLY DESCRIPTION	ASSEMBLY PART NUMBER	CONNECTOR HOUSING	GROMMET CAP	TPA	RIGHT SLIDE	LEFT SLIDE	MATE ASSIST LEVER	CPA	MAT SEAL	RING SEAL	BLOCKED TERMINALS CAVITY WITH A NUMBER INDICATES BLOCKED TERMINAL POSITION CAVITY WITHOUT A NUMBER INDICATES OPEN TERMINAL POSITION	STATUS	COMMENTS	INTEGRAL COMPONENTS SOLD SEPARATELY DRESS COVER
MX123 CONN ASSY 73 CKT GRY OPT0 KEY B/58	345669783	C-HSG-B0	G-CAP-0-P	TPA-B0	RS	LS	MAL	CPA	MSEAL	RSEAL	- - - - - - 66 - - - - - - - 58 - - - - - 52 51 - - - - - 45 - - - 41 - - 38 37 - - - - - - - - - - - - - - - - - - - 20 19 18 17 - - - - - - - - - - - - - 5 4 - - 1	SALEABLE		345650003
MX123 CONN ASSY 73 CKT BLK OPT0 KEY A/32	345669803	C-HSG-A0	G-CAP-0-P	TPA-A0	RS	LS	MAL	CPA	MSEAL	RSEAL	- - - - - 67 66 - - - 62 - 60 - 58 - - 55 54 53 - - - - 48 - 46 45 44 43 42 - 40 39 - - - 35 - - - - - - - - - 26 25 - - 22 21 - - - 17 - 15 14 - - - - - 8 7 6 5 4 3 2 -	SALEABLE		345650003
MX123 CONN ASSY 73 CKT GRY OPT9 KEY B/51	345669833	C-HSG-B9	G-CAP-9-P	TPA-B9	RS	LS	MAL	CPA	MSEAL	RSEAL	- - - - - - 66 65 - - 62 - 60 59 - - - - - - - - - - - - 46 45 - - 42 - 40 39 - - - 35 34 - - - 31 - - - 27 - - - - - - - 19 18 17 - 15 - - - 11 - - - - - - - 3 2 1	SALEABLE		345650003
MX123 CONN ASSY 73 CKT BLK OPT9 KEY A/41	345669843	C-HSG-A9	G-CAP-9-P	TPA-A9	RS	LS	MAL	CPA	MSEAL	RSEAL	- - - 69 68 - - - - - - - 60 - 58 57 56 - - - - - - 49 48 - - - - - - - - - 38 - - - - - - 32 31 - - 28 27 26 25 24 23 22 21 20 19 - - 16 15 14 - 12 11 10 9 - - 6 5 4 - 2 -	SALEABLE		345650003
MX123 CONN ASSY 73 CKT GRY OPT9 KEY B/62	345669853	C-HSG-B9	G-CAP-9-P	TPA-B9	RS	LS	MAL	CPA	MSEAL	RSEAL	- - - - - - 66 - 41 - - 38 37 - - - - - - - - - - - - - - - - - - - 19 18 17 - - - - - - - - - 8 - - 5 4 - - 1	SALEABLE		345650003
MX123 CONN ASSY 73 CKT GRY OPT0 KEY B/61	345669863	C-HSG-B0	G-CAP-0-P	TPA-B0	RS	LS	MAL	CPA	MSEAL	RSEAL	- - - - - - 66 - - - - - - - 58 - - - - - - - - - - - - - - - 41 - - 38 37 - - - - - - - - - - - - - - - - - - - 20 19 18 17 - - - - - - - - - - - - - 5 4 - - 1	SALEABLE		345650003
MX123 CONN ASSY 73 CKT BLK OPT0 KEY A/33	345669903	C-HSG-A0	G-CAP-0-P	TPA-A0	RS	LS	MAL	CPA	MSEAL	RSEAL	72 - 70 - - 67 66 - - - 62 - 60 - - - - 55 54 53 - 51 - - 48 - 46 45 44 43 42 - 40 39 - - - 35 - - - - - - - - - 26 25 - - 22 21 - - - - - 15 14 - - - - - 8 7 6 5 4 3 2 -	SALEABLE		345650003
MX123 CONN ASSY 73 CKT BLK OPT0 KEY A/41	345669913	C-HSG-A0	G-CAP-0-P	TPA-A0	RS	LS	MAL	CPA	MSEAL	RSEAL	- - 70 69 - - - - - 63 62 61 60 - 58 57 56 55 54 53 52 51 - 49 - - - - 44 43 42 41 - - - 37 36 35 34 33 - 32 - - 29 28 27 26 - - 23 - - - 19 18 - 16 15 - 13 12 11 10 - 8 - - - - 3 - -	SALEABLE		345650003
MX123 CONN ASSY 73 CKT BLK OPT0 KEY A/41	345669923	C-HSG-A0	G-CAP-0-P	TPA-A0	RS	LS	MAL	CPA	MSEAL	RSEAL	- - 70 69 68 - - 65 64 63 - - - 59 58 - 56 - - 53 52 - 50 49 - 47 - - - - - 41 40 - 38 37 36 - 34 - - 32 31 30 29 28 27 - - - 23 22 21 20 19 18 17 16 - - 13 12 11 10 9 - - - - - - - 1	SALEABLE		345650003
MX123 CONN ASSY 73 CKT GRY OPT0 KEY B/51	345669933	C-HSG-B0	G-CAP-0-P	TPA-B0	RS	LS	MAL	CPA	MSEAL	RSEAL	72 71 70 - 68 67 66 - - - 62 61 60 59 58 57 56 55 54 53 52 51 50 - 48 47 46 - - - 42 41 40 39 38 37 36 35 34 33 - 32 31 30 29 28 27 26 25 24 23 - - - - - - 16 15 14 13 - - 10 9 8 7 - - - - - -	SALEABLE		345650003
MX123 CONN ASSY 73 CKT BLU OPT0 KEY C/38	345669943	C-HSG-C0	G-CAP-0-P	TPA-C0	RS	LS	MAL	CPA	MSEAL	RSEAL	72 - 70 - 68 67 66 - - 63 62 - - 59 - 57 - - - 53 52 51 - - 48 47 46 - 44 - 42 - 40 39 38 - - - 34 33 - 32 - 30 - - 27 26 25 - - 22 21 20 - - - - 15 14 - - - 10 9 - - 6 5 4 - - -	SALEABLE		345650003
MX123 CONN ASSY 73 CKT BLK OPT0 KEY A/51	345669953	C-HSG-A0	G-CAP-0-P	TPA-A0	RS	LS	MAL	CPA	MSEAL	RSEAL	72 71 70 69 68 - 66 65 64 63 - 61 - 59 58 - 56 - 54 53 52 - 50 49 - 47 - - - - 42 41 40 - 38 37 36 - 34 33 - 32 31 30 29 28 27 26 - 24 23 22 21 20 19 18 17 16 - - 13 12 11 10 9 8 - - - - - - 1	SALEABLE		345650003

molex

MX123 SEALED RCPT ASSY (73 Ckt)
BOM & PIN OUT SHEET

ASSEMBLY DESCRIPTION	ASSEMBLY PART NUMBER	CONNECTOR HOUSING	GROMMET CAP	TPA	RIGHT SLIDE	LEFT SLIDE	MATE ASSIST LEVER	CPA	MAT SEAL	RING SEAL	BLOCKED TERMINALS CAVITY WITH A NUMBER INDICATES BLOCKED TERMINAL POSITION CAVITY WITHOUT A NUMBER INDICATES OPEN TERMINAL POSITION	STATUS	COMMENTS	INTEGRAL COMPONENTS SOLD SEPARATELY DRESS COVER
MX123 CONN ASSY 73 CKT GRY OPT0 KEY B/24	345669963	C-HSG-B0	G-CAP-0-P	TPA-B0	RS	LS	MAL	CPA	MSEAL	RSEAL	72 71 70 69 - - 66 65 - - 62 61 60 59 - 57 56 - 54 53 52 51 50 49 48 47 - - 44 - 42 41 40 39 - 37 36 - 34 33 - - 31 - - - - 26 25 24 23 - 21 20 - 18 - 16 - 14 - 12 11 - 9 8 7 6 5 4 3 2 -	SALEABLE		345650003
MX123 CONN ASSY 73 CKT GRY OPT0 KEY B/19	345669973	C-HSG-B0	G-CAP-0-P	TPA-B0	RS	LS	MAL	CPA	MSEAL	RSEAL	72 71 70 69 - - 66 65 - - 62 61 60 59 - 57 56 55 54 53 52 51 50 49 48 47 - - 44 - 42 41 40 39 - 37 36 35 34 33 - - 31 - - - - 26 25 24 23 - 21 20 19 18 - 16 - 14 - 12 11 - 9 8 7 6 5 4 3 2 1	SALEABLE		345650003

MX123 52/66/73/80-WAY RECEPTACLE ASSY SEALED PIN OUT SHEET

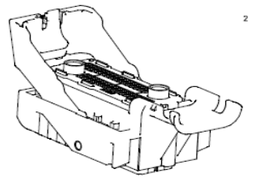

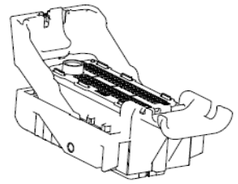

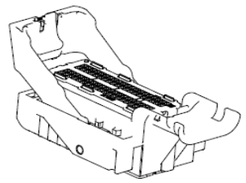

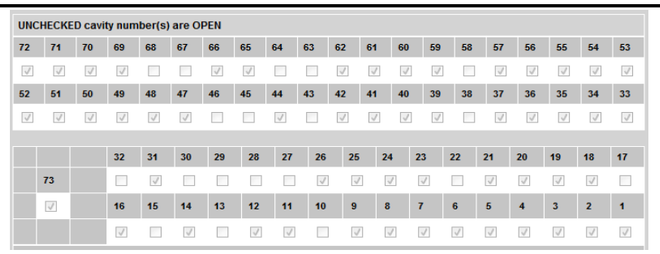

FOR ADDITIONAL INFORMATION SEE SD-34566-001

STATUS	GM PART #	HRNS CONN ASSY			TPA	GROMMET CAP																			
		MATERIAL/PART NUMBER	WIRE DRESS OPTION	KEY OPTION Fp	COLOR OPTION Fp	NUMBERS INDICATE CAVITIES OPEN FOR CIRCUITS Fp																			
SALEABLE	12672860	34566-0103	0	A	BLACK																				
SALEABLE	12672862	34566-0203	0	B	ST GRY	72	71	70	69	68	67	66	65	64	63	62	61	60	59	58	57	56	55	54	53
SALEABLE	12672864	34566-0303	0	C	BLUE	52	51	50	49	48	47	46	45	44	43	42	41	40	39	38	37	36	35	34	33
TOOL DES. REL.	12615660	34566-0403	0	D	BROWN	73				32	31	30	29	28	27	26	25	24	23	22	21	20	19	18	17
TOOL DES. REL.	12615661	34566-0503	0	E	GREEN					16	15	14	13	12	11	10	9	8	7	6	5	4	3	2	1
SALEABLE	12672866	34566-0603	0	F	NATURAL																				
SALEABLE	12672872	34566-0703	0	G	BLUE																				
SALEABLE	12672870	34566-0803	0	H	ST GRY	80	79	78	77	76	75	74	73	72	71	70	69	68	67	66	65	64	63	62	61
TOOL DES. REL.	12672868	34566-0903	0	J	BLACK	60	61	62	63	64	65	66	67	68	69	70	71	72	73	74	75	76	77	78	79
TOOL DES. REL.	TBD	34566-1003	0	K	BROWN	40	39	38	37	36	35	34	33	32	31	30	29	28	27	26	25	24	23	22	21
TOOL DES. REL.	TBD	34566-1103	0	L	GREEN	20	19	18	17	16	15	14	13	12	11	10	9	8	7	6	5	4	3	2	1
TOOL DES. REL.	TBD	34566-1203	0	M	NATURAL																				
SALEABLE	12672861	34566-1303	9	A	BLACK																				
SALEABLE	12672863	34566-1403	9	B	ST GRY	72	71	70	69	68	67	66	65	64	63	62	61	60	59	58	57	56	55	54	53
SALEABLE	12672865	34566-1503	9	C	BLUE	52	51	50	49	48	47	46	45	44	43	42	41	40	39	38	37	36	35	34	33
TOOL DES. REL.	12615663	34566-1603	9	D	BROWN	73				32	31	30	29	28	27	26	25	24	23	22	21	20	19	18	17
TOOL DES. REL.	12615664	34566-1703	9	E	GREEN					16	15	14	13	12	11	10	9	8	7	6	5	4	3	2	1
SALEABLE	12672867	34566-1803	9	F	NATURAL																				
SALEABLE	12672873	34566-1903	9	G	BLUE																				
SALEABLE	12672871	34566-2003	9	H	ST GRY	80	79	78	77	76	75	74	73	72	71	70	69	68	67	66	65	64	63	62	61
TOOL DES. REL.	12672869	34566-2103	9	J	BLACK	60	61	62	63	64	65	66	67	68	69	70	71	72	73	74	75	76	77	78	79
TOOL DES. REL.	TBD	34566-2203	9	K	BROWN	40	39	38	37	36	35	34	33	32	31	30	29	28	27	26	25	24	23	22	21
TOOL DES. REL.	TBD	34566-2303	9	L	GREEN	20	19	18	17	16	15	14	13	12	11	10	9	8	7	6	5	4	3	2	1
TOOL DES. REL.	TBD	34566-2403	9	M	NATURAL																				
SALEABLE	12672856	34822-0013	0	A	BLACK	64	63	62	61	60	59	58	57	56	55	54	53	52	51	50	49	66			
						48	47	46	45	44	43	42	41	40	39	38	37	36	35	34	33				
SALEABLE	12672858	34822-0033	0	C	BLUE	65				32	31	30	29	28	27	26	25	24	23	22	21	20	19	18	17
										16	15	14	13	12	11	10	9	8	7	6	5	4	3	2	1
SALEABLE	12672857	34822-0023	9	A	BLACK	64	63	62	61	60	59	58	57	56	55	54	53	52	51	50	49	66			
						48	47	46	45	44	43	42	41	40	39	38	37	36	35	34	33				
SALEABLE	12672859	34822-0043	9	C	BLUE	65				32	31	30	29	28	27	26	25	24	23	22	21	20	19	18	17
										16	15	14	13	12	11	10	9	8	7	6	5	4	3	2	1

molex

MX123 52/66/73/80-WAY RECEPTACLE ASSY SEALED PIN OUT SHEET

STATUS	GM PART #	HRNS CONN ASSY			TPA	GROMMET CAP
		MATERIAL/PART NUMBER	WIRE DRESS OPTION	KEY OPTION Fp	COLOR OPTION Fp	NUMBERS INDICATE CAVITIES OPEN FOR CIRCUITS Fp
TOOL DES. REL.	12672852	160094-0001	0	A	BLACK	
TOOL DES. REL.	N/A	160094-0002	0	B	ST GRY	
TOOL DES. REL.	12672854	160094-0003	0	C	BLUE	
TOOL DES. REL.	N/A	160094-0004	0	D	BROWN	
TOOL DES. REL.	N/A	160094-0005	0	E	GREEN	
TOOL DES. REL.	N/A	160094-0006	0	F	NATURAL	
TOOL DES. REL.	12672853	160094-0013	9	A	BLACK	
TOOL DES. REL.	N/A	160094-0014	9	B	ST GRY	
TOOL DES. REL.	12672855	160094-0015	9	C	BLUE	
TOOL DES. REL.	N/A	160094-0016	9	D	BROWN	
TOOL DES. REL.	N/A	160094-0017	9	E	GREEN	
TOOL DES. REL.	N/A	160094-0018	9	F	NATURAL	

52	14	13	12	11	10	9	8	7	6	5	4	3	2
	26	25	24	23	22	21	20	19	18	17	16	15	
51	38	37	36	35	34	33	32	31	30	29	28	27	1
	50	49	48	47	46	45	44	43	42	41	40	39	

52	14	13	12	11	10	9	8	7	6	5	4	3	2
	26	25	24	23	22	21	20	19	18	17	16	15	
51	38	37	36	35	34	33	32	31	30	29	28	27	1
	50	49	48	47	46	45	44	43	42	41	40	39	

STATUS	GM PART #	HRNS CONN ASSY MATERIAL/PART NUMBER	WIRE DRESS OPTION	KEY OPTION Fp	TPA COLOR OPTION Fp	GROMMET CAP NUMBERS INDICATE CAVITIES OPEN FOR CIRCUITS Fp
NA	NA	NA	NA	NA	NA	73
SALEABLE	NOT APPLICABLE	34566-2503	0	A	BLACK	72 71 69 68 67 66 64 63 62 59 56 53 50 48 46 44 43 42 39 36 35 33 73 32 30 29 27 23 20 17 14 13 12 11 9 8 5 4 3 2 1
SALEABLE	NOT APPLICABLE	34566-2603	0	B	ST GRY	67 66 65 59 57 55 53 49 48 47 44 39 37 35 33 73 29 28 23 21 7
SALEABLE	NOT APPLICABLE	34566-2703	0	B	ST GRY	65 59 57 55 53 49 48 47 44 39 37 35 33 73 29 28 23 21 7
SALEABLE	TBD	34566-2803	0	H	ST GRY	
SALEABLE	NOT APPLICABLE	34566-2903	0	A	BLACK	72 71 70 69 68 67 66 64 63 62 61 59 55 54 53 52 51 49 48 44 43 42 41 39 35 34 33 73 32 31 29 27 25 23 19 18 17 16 13 12 11 9 8 7 6 5 4 3 2 1
SALEABLE	NOT APPLICABLE	34566-3003	0	A	BLACK	72 71 70 69 68 67 66 64 63 62 60 59 58 57 56 55 54 53 52 51 50 49 48 47 46 44 43 42 41 40 39 38 37 36 35 34 33 73 32 31 30 29 28 27 25 24 23 22 21 20 19 18 17 16 15 14 13 12 11 9 8 7 6 5 4 3 2 1
SALEABLE	NOT APPLICABLE	34566-3103	0	B	ST GRY	65 62 59 57 55 53 49 48 46 42 39 37 35 33 73 29 26 23 21 18 15 9 8 7 4 3
SALEABLE	NOT APPLICABLE	34566-3203	0	B	ST GRY	67 60 59 58 57 56 55 53 50 49 48 46 39 38 37 35 34 33 73 29 23 22 21 18 16 15 14 7 6 5 4 3
SALEABLE	NOT APPLICABLE	34566-3303	0	B	ST GRY	59 58 57 56 55 53 50 49 48 46 39 38 37 35 34 33 73 29 23 22 21 18 16 15 14 7 6 5 4 3
SALEABLE	NOT APPLICABLE	34566-3403	SEE 34566-3003			
SALEABLE	NOT APPLICABLE	34566-3503	0	A	BLACK	72 71 69 68 67 66 64 63 62 60 59 52 49 48 46 44 43 42 40 39 35 33 73 32 29 27 24 23 17 14 13 12 11 9 8 7 6 5 4 3 2 1

molex

MX123 52/66/73/80-WAY RECEPTACLE ASSY SEALED PIN OUT SHEET

STATUS	GM PART #	HRNS CONN ASSY			TPA	GROMMET CAP
		MATERIAL/PART NUMBER	WIRE DRESS OPTION	KEY OPTION Fp	COLOR OPTION Fp	NUMBERS INDICATE CAVITIES OPEN FOR CIRCUITS Fp
SALEABLE	NOT APPLICABLE	34566-3603	0	B	ST GRY	73: 68 64 59 57 55 53 / 49 48 46 39 37 35 33 / 32 29 23 21 18 / 11 10 7
SALEABLE	NOT APPLICABLE	34566-3703	0	A	BLACK	73: 68 67 66 65 59 55 53 / 49 48 47 44 39 35 33 / 29 28 23 / 7
SALEABLE	NOT APPLICABLE	34566-3803	0	A	BLACK	73: 72 71 69 68 67 66 64 63 62 59 56 53 / 50 48 46 44 43 42 39 36 35 33 / 32 30 29 27 23 20 17 / 14 13 12 11 10 9 8 5 4 3 2 1
SALEABLE	NOT APPLICABLE	34566-3903	0	B	ST GRY	73: 65 59 57 55 53 / 49 48 46 44 39 37 35 33 / 29 28 24 23 21 / 7
SALEABLE	NOT APPLICABLE	34566-4003	0	B	ST GRY	73: 67 66 64 63 59 57 55 53 / 50 49 48 43 39 37 35 33 / 32 29 27 24 23 21 18 / 15 7 6 5 4 3
SALEABLE	NOT APPLICABLE	34566-4103	0	A	BLACK	73: 72 71 69 68 67 66 64 63 62 60 59 / 52 49 48 46 45 44 43 42 40 39 35 33 / 32 29 27 26 24 23 17 / 14 13 12 11 10 9 8 7 6 5 4 3 2 1
SALEABLE	NOT APPLICABLE	34566-4203	0	B	ST GRY	73: 64 59 57 55 53 / 50 49 48 46 39 37 35 33 / 32 29 24 23 21 18 / 15 7 6 5 4 3
SALEABLE	NOT APPLICABLE	34566-4303	0	A	BLACK	73: 70 69 68 67 65 64 63 61 59 58 57 56 / 50 49 48 47 41 38 37 36 34 33 / 32 31 30 29 28 27 24 23 20 19 18 / 16 13 12 11 10 9 1
SALEABLE	NOT APPLICABLE	34566-4403	0	A	BLACK	73: 72 71 70 69 68 67 66 65 64 63 61 59 58 57 56 / 50 49 48 47 41 38 37 36 34 33 / 32 31 30 29 28 27 24 23 20 19 18 / 16 13 12 11 10 9 6 4
SALEABLE	NOT APPLICABLE	34566-4503	0	H	ST GRY	79 78 77 76 75 74 73 72 71 70 69 68 66 65 64 63 61 / 60 59 58 57 56 53 50 44 43 41 / 40 39 38 37 35 34 33 32 30 29 27 26 24 23 22 21 / 20 19 18 17 13 12 11 8 6 5 3 2
SALEABLE	NOT APPLICABLE	34566-4603	0	H	ST GRY	79 78 77 76 75 74 73 72 71 70 69 68 66 65 64 63 61 / 60 59 58 57 56 53 50 44 43 41 / 40 39 38 37 35 34 33 32 30 29 27 26 22 21 / 20 19 18 17 13 12 8 6 5 3 2
SALEABLE	NOT APPLICABLE	34566-4703	0	B	ST GRY	73: 67 66 65 64 59 58 57 55 53 / 49 48 47 44 39 38 37 35 33 / 29 23 22 21 / 12 9 7
SALEABLE	NOT APPLICABLE	34566-4803	0	A	BLACK	73: 72 71 69 68 67 66 64 63 62 61 59 53 / 48 44 42 41 39 35 33 / 32 29 27 25 23 17 / 13 12 11 9 8 5 4 3 2 1
SALEABLE	NOT APPLICABLE	34566-4903	0	A	BLACK	73: 72 71 70 69 68 66 65 64 63 62 61 59 58 57 56 55 / 52 51 50 49 47 44 43 41 38 37 36 35 34 33 / 32 31 30 29 28 27 24 23 20 19 18 17 / 16 15 14 13 12 11 10 9 2 1
SALEABLE	NOT APPLICABLE	34566-5003	0	H	ST GRY	79 78 77 76 75 74 73 72 71 70 69 68 66 65 64 63 61 / 60 59 58 57 56 53 52 50 44 43 41 / 40 39 38 37 35 34 33 32 30 29 27 26 22 21 / 20 19 18 17 16 14 13 12 11 10 9 8 6 5 3 2

MX123 52/66/73/80-WAY RECEPTACLE ASSY SEALED PIN OUT SHEET

STATUS	GM PART #	HRNS CONN ASSY			TPA	GROMMET CAP
		MATERIAL/PART NUMBER	WIRE DRESS OPTION	KEY OPTION Fp	COLOR OPTION Fp	NUMBERS INDICATE CAVITIES OPEN FOR CIRCUITS Fp
SALEABLE	NOT APPLICABLE	34566-5103	0	B	ST GRY	73
SALEABLE	NOT APPLICABLE	34566-5203	0	A	BLACK	73
SALEABLE	NOT APPLICABLE	34566-5303	0	B	ST GRY	73
SALEABLE	NOT APPLICABLE	34566-5403	0	B	ST GRY	73
SALEABLE	NOT APPLICABLE	34566-5503	0	A	BLACK	73
SALEABLE	NOT APPLICABLE	34566-5603	SEE 34566-2503			
SALEABLE	NOT APPLICABLE	34566-5703	0	B	ST GRY	73
SALEABLE	NOT APPLICABLE	34566-5803	0	B	ST GRY	73
SALEABLE	NOT APPLICABLE	34566-5903	0	A	BLACK	73
SALEABLE	NOT APPLICABLE	34566-6003	0	B	ST GRY	73
SALEABLE	NOT APPLICABLE	34566-6103	0	B	ST GRY	73
SALEABLE	NOT APPLICABLE	34566-6203	0	A	BLACK	73
SALEABLE	NOT APPLICABLE	34566-6303	0	A	BLACK	73
SALEABLE	NOT APPLICABLE	34566-6403	0	A	BLACK	73
SALEABLE	NOT APPLICABLE	34566-6503	0	A	BLACK	73

MX123 52/66/73/80-WAY RECEPTACLE ASSY SEALED PIN OUT SHEET

STATUS	GM PART #	HRNS CONN ASSY			TPA	GROMMET CAP
		MATERIAL/PART NUMBER	WIRE DRESS OPTION	KEY OPTION Fp	COLOR OPTION Fp	NUMBERS INDICATE CAVITIES OPEN FOR CIRCUITS Fp
SALEABLE	NOT APPLICABLE	34566-6603	0	H	ST GRY	79 78 77 76 75 74 73 72 71 70 69 68 66 65 64 63 61 60 59 58 57 56 53 52 50 44 43 41 40 39 38 37 35 34 33 32 30 29 27 26 22 21 20 19 18 17 16 13 12 8 6 5 3 2
SALEABLE	NOT APPLICABLE	34566-6703	0	H	ST GRY	79 78 77 76 75 74 73 72 71 70 69 68 66 65 64 63 61 60 59 58 57 56 53 50 44 43 41 40 39 38 37 35 34 33 32 30 29 27 26 22 21 20 19 18 17 14 13 12 11 10 9 8 6 5 3 2
SALEABLE	NOT APPLICABLE	34566-6803	0	B	ST GRY	65 59 57 55 53 49 48 46 44 39 37 35 33 73 29 28 23 21 7
SALEABLE	NOT APPLICABLE	34566-6903	0	B	ST GRY	64 59 57 55 53 49 48 46 39 37 35 33 73 32 29 23 21 18 7
SALEABLE	NOT APPLICABLE	34566-7003	0	B	ST GRY	67 66 59 57 56 55 53 50 49 48 47 39 37 36 35 33 73 29 23 21 18 17 15 13 12 8 7 6 5 4 3
SALEABLE	NOT APPLICABLE	34566-7103	0	A	BLACK	72 71 70 69 68 67 66 64 63 62 60 59 55 54 53 52 49 48 44 43 42 40 39 35 34 33 73 32 29 28 27 24 23 19 18 17 16 13 12 11 9 8 7 6 5 4 3 2 1
SALEABLE	NOT APPLICABLE	34566-7203	0	B	ST GRY	72 71 70 69 68 67 66 65 64 63 62 60 59 55 54 53 52 49 48 44 43 42 39 35 34 33 73 32 29 27 24 23 20 19 18 17 16 13 12 11 9 8 7 6 5 4 3 2 1
SALEABLE	NOT APPLICABLE	34566-7303	0	B	ST GRY	69 68 66 59 55 53 49 48 46 44 39 37 35 33 73 29 28 23 21 18 17 12 11 10 7
SALEABLE	NOT APPLICABLE	34566-7403	0	B	ST GRY	59 57 55 53 50 49 48 46 39 37 35 33 73 29 23 21 15 7 6 5 4 3
SALEABLE	NOT APPLICABLE	34566-7503	0	A	BLACK	72 71 70 69 68 67 66 64 63 62 60 59 58 57 56 55 54 53 52 51 50 49 48 47 46 44 43 42 40 39 38 37 36 35 34 33 73 32 31 30 29 28 27 24 23 22 21 20 19 18 17 16 15 14 13 12 11 9 8 7 6 5 4 3 2 1
SALEABLE	NOT APPLICABLE	34566-7603	0	B	ST GRY	69 68 66 59 55 53 49 48 46 44 39 37 35 33 73 29 28 23 21 18 17 12 11 10 7
SALEABLE	NOT APPLICABLE	34566-7703	0	A	BLACK	72 71 70 69 68 67 66 64 63 62 60 59 55 54 53 52 49 48 44 43 42 40 39 35 34 33 73 32 29 27 24 23 19 18 17 16 13 12 11 9 8 7 6 5 4 3 2 1
SALEABLE	NOT APPLICABLE	34566-7803	0	A	BLACK	72 71 70 68 66 64 63 62 61 60 59 55 54 53 52 49 48 46 44 43 42 40 39 35 34 33 73 32 29 28 27 24 23 19 18 17 16 14 13 12 11 9 8 7 6 3 2 1
SALEABLE	NOT APPLICABLE	34566-7903	0	B	ST GRY	64 59 57 55 53 42 39 35 33 73 23 20 19 15 4 3 2 1
SALEABLE	NOT APPLICABLE	34566-8003	0	A	BLACK	69 68 65 64 63 61 60 59 58 56 55 53 52 50 49 48 47 41 38 37 36 34 33 73 32 31 30 29 28 27 24 23 20 19 18 17 16 13 12 11 10 9 1

molex

MX123 52/66/73/80-WAY RECEPTACLE ASSY SEALED PIN OUT SHEET

STATUS	GM PART #	HRNS CONN ASSY			TPA	GROMMET CAP
		MATERIAL/PART NUMBER	WIRE DRESS OPTION	KEY OPTION Fp	COLOR OPTION Fp	NUMBERS INDICATE CAVITIES OPEN FOR CIRCUITS Fp
SALEABLE	NOT APPLICABLE	34566-8103	0	H	ST GRY	78 72 66 63 61 60 59 58 57 56 53 52 50 44 43 41 40 37 35 34 33 32 30 29 27 26 24 22 21 20 19 18 17 16 13 12 8 6 5 3 2
SALEABLE	NOT APPLICABLE	34566-8203	0	A	BLACK	70 67 66 58 56 55 54 47 44 43 42 41 39 37 36 34 73 31 30 27 25 24 21 20 19 18 13 6 5 4 3 1
SALEABLE	NOT APPLICABLE	34566-8303	0	A	BLACK	72 71 69 68 67 66 64 63 62 59 58 57 56 54 53 52 51 50 49 48 47 46 44 43 42 39 38 37 36 35 34 33 73 32 31 30 29 27 24 23 22 21 20 19 17 15 14 13 12 11 9 8 7 6 5 4 3 2 1
SALEABLE	NOT APPLICABLE	34566-8403	0	B	ST GRY	65 64 59 57 55 53 50 49 48 46 39 37 35 33 73 32 29 24 23 21 15 7 6 5 4 3
SALEABLE	NOT APPLICABLE	34566-8503	0	B	ST GRY	72 71 70 69 68 67 66 65 64 63 62 60 59 55 54 53 52 49 48 44 43 42 39 35 34 33 73 32 29 27 24 23 19 18 17 13 12 11 9 8 7 6 5 4 3 2 1
SALEABLE	NOT APPLICABLE	34566-8603	0	A	BLACK	69 68 66 59 57 55 53 49 48 46 44 39 38 37 35 33 73 29 28 23 21 18 17 12 11 10 7
SALEABLE	NOT APPLICABLE	34566-8703	0	B	ST GRY	69 68 66 64 59 57 55 53 50 49 48 47 44 39 37 35 33 73 29 28 23 21 17 15 12 11 10 7 6 5 4 3
SALEABLE	NOT APPLICABLE	34566-8803	0	B	ST GRY	68 67 66 65 59 58 57 54 53 51 50 49 48 46 45 43 42 40 39 38 37 33 73 32 31 30 26 24 23 22 20 16 13 10 9 8 7 6 5 4
SALEABLE	NOT APPLICABLE	34566-8903	0	H	ST GRY	78 71 70 69 68 67 66 65 64 63 61 58 57 56 53 52 51 50 44 43 41 40 37 35 34 33 32 30 29 27 26 22 21 20 19 18 17 16 14 12 10 9 8 7 6 5 3 2 1
SALEABLE	NOT APPLICABLE	34566-9003	0	B	ST GRY	69 68 66 59 57 55 53 49 48 46 44 39 37 35 33 73 29 28 23 21 18 11 10 7
SALEABLE	NOT APPLICABLE	34566-9103	0	A	BLACK	68 65 63 61 59 58 56 53 52 51 50 47 41 38 37 36 35 34 33 73 32 31 30 29 28 27 25 24 23 22 21 20 19 18 17 16 15 14 13 12 11 10 9 1
SALEABLE	NOT APPLICABLE	34566-9203	0	A	BLACK	72 71 70 69 68 67 66 64 63 62 60 59 55 54 53 52 49 48 44 43 42 40 39 38 35 34 33 73 30 29 28 27 24 23 19 18 17 16 13 12 11 9 8 7 6 5 4 3 2 1
SALEABLE	NOT APPLICABLE	34566-9303	0	A	BLACK	72 71 69 68 67 66 64 63 62 59 58 57 56 55 54 53 52 51 50 49 48 47 46 44 43 42 39 38 37 36 35 34 33 73 32 31 30 29 27 24 23 22 21 20 19 17 15 14 13 12 11 9 8 7 6 5 4 3 2 1
SALEABLE	NOT APPLICABLE	34566-9403	0	B	ST GRY	68 67 66 65 59 58 57 54 53 51 50 49 48 46 45 43 42 41 40 39 38 37 35 33 73 32 31 30 26 24 23 22 20 16 13 10 9 8 7 6 5 4
SALEABLE	NOT APPLICABLE	34566-9503	0	A	BLACK	72 71 70 69 68 65 64 63 61 59 58 57 56 52 51 49 47 41 38 37 36 34 33 73 32 31 30 29 28 27 24 23 20 19 18 17 16 15 14 13 12 11 10 9 1

molex

MX123 52/66/73/80-WAY RECEPTACLE ASSY SEALED PIN OUT SHEET

STATUS	GM PART #	HRNS CONN ASSY			TPA	GROMMET CAP
		MATERIAL/PART NUMBER	WIRE DRESS OPTION	KEY OPTION Fp	COLOR OPTION Fp	NUMBERS INDICATE CAVITIES OPEN FOR CIRCUITS Fp
SALEABLE	NOT APPLICABLE	34566-9603	0	A	BLACK	71 70 69 68 66 65 64 63 61 59 58 57 56 52 50 49 47 41 38 37 36 35 34 33 73 32 31 30 29 28 27 24 23 20 19 18 17 16 15 14 13 12 11 10 9 1
SALEABLE	NOT APPLICABLE	34566-9703	0	A	BLACK	72 71 70 69 68 65 64 63 61 59 57 56 52 51 50 49 47 41 38 37 36 34 33 73 32 31 30 29 28 27 24 23 20 19 18 16 13 12 11 10 9 3 2 1
SALEABLE	NOT APPLICABLE	34566-9803	0	A	BLACK	72 71 70 69 68 65 64 63 61 59 57 56 52 51 50 49 47 41 38 37 36 34 33 73 32 31 30 29 28 27 24 23 20 19 18 16 13 12 11 10 9 1
SALEABLE	NOT APPLICABLE	34566-9903	0	A	BLACK	71 69 68 65 64 63 61 59 58 57 56 52 50 49 47 41 38 37 36 34 33 73 32 31 30 29 28 27 24 23 20 19 18 17 16 13 12 11 10 9 1
SALEABLE	NOT APPLICABLE	34566-1013	0	A	BLACK	71 69 68 65 64 63 61 59 58 57 56 52 50 49 47 41 38 37 36 34 33 73 32 31 30 29 28 27 24 23 20 19 18 17 16 13 12 11 10 9 3 2 1
SALEABLE	NOT APPLICABLE	34566-1023	0	A	BLACK	70 67 66 65 58 57 55 54 50 49 47 44 43 42 41 39 37 35 73 32 30 27 25 24 21 20 19 18 17 16 15 13 10 9 8 6 5 3 2 1
SALEABLE	NOT APPLICABLE	34566-1033	0	A	BLACK	72 70 67 66 65 58 57 55 54 50 49 47 44 43 42 41 39 37 35 73 32 30 27 26 25 24 21 20 19 18 17 16 15 13 10 9 8 6 5 3 2 1
SALEABLE	NOT APPLICABLE	34566-1043	0	B	ST GRY	71 70 68 66 65 59 58 57 54 53 51 50 49 48 46 45 43 41 40 39 38 37 36 35 33 73 32 31 30 24 23 22 20 16 13 12 11 10 9 8 7 6 5 4
SALEABLE	NOT APPLICABLE	34566-1053	0	H	ST GRY	79 78 77 76 75 74 73 72 71 70 69 68 66 65 64 63 61 60 59 58 57 56 53 52 50 44 43 41 40 39 38 37 35 34 33 32 30 29 27 26 22 21 20 19 18 17 16 14 13 12 11 9 8 6 5 3 2
SALEABLE	NOT APPLICABLE	34566-1063	0	B	ST GRY	65 60 59 57 56 55 53 49 48 47 44 40 39 37 36 35 33 73 29 28 24 23 21 2
SALEABLE	NOT APPLICABLE	34566-1073	0	A	BLACK	72 71 70 69 68 67 66 65 64 63 61 59 58 57 56 54 50 49 48 47 42 41 38 37 36 34 33 73 32 31 30 29 28 27 26 24 23 20 19 18 16 13 12 11 10 9
SALEABLE	NOT APPLICABLE	34566-1083	0	B	ST GRY	68 67 66 65 64 59 58 57 55 54 53 51 50 49 48 46 45 43 42 41 40 39 38 37 35 33 73 32 31 30 26 24 23 22 20 16 13 10 9 8 7 6 5 4 3 2
SALEABLE	NOT APPLICABLE	34566-1093	0	A	BLACK	70 68 67 66 58 56 55 54 49 47 44 43 42 41 39 37 36 34 73 31 30 27 25 24 21 20 19 18 13 6 5 4 3 1
SALEABLE	NOT APPLICABLE	34566-1123	0	H	ST GRY	78 71 70 69 68 67 66 65 64 63 61 58 57 56 53 52 51 50 44 43 41 40 37 35 34 33 32 30 29 27 26 22 21 20 19 18 17 16 14 12 10 9 8 7 6 5 3 2 1
SALEABLE	NOT APPLICABLE	34566-1133	0	A	BLACK	70 68 67 66 61 58 57 55 54 49 47 45 44 43 42 41 39 37 34 73 32 30 27 25 24 21 20 19 18 13 11 6 5 3 1

MX123 52/66/73/80-WAY RECEPTACLE ASSY SEALED PIN OUT SHEET

STATUS	GM PART #	HRNS CONN ASSY			TPA	GROMMET CAP
		MATERIAL/PART NUMBER	WIRE DRESS OPTION	KEY OPTION Fp	COLOR OPTION Fp	NUMBERS INDICATE CAVITIES OPEN FOR CIRCUITS Fp
SALEABLE	NOT APPLICABLE	34566-1143	0	A	BLACK	73: 68 65 63 61 59 58 56 53 / 52 50 47 41 38 37 36 35 34 33 / 32 31 30 29 28 27 25 24 23 22 21 20 19 18 17 / 16 15 14 13 12 11 10 9 1
SALEABLE	NOT APPLICABLE	34566-1153	0	A	BLACK	73: 70 67 66 65 58 57 55 / 49 47 44 43 42 41 39 37 / 32 30 27 25 24 23 21 20 19 18 / 13 8 6 5 3 1
SALEABLE	NOT APPLICABLE	34566-1163	0	H	ST GRY	73: 78 72 71 70 69 68 66 65 64 63 61 / 60 59 58 57 56 53 52 50 44 43 41 / 40 37 35 34 32 30 29 27 26 22 21 / 20 19 18 17 16 13 12 8 6 5 3 2
SALEABLE	NOT APPLICABLE	34566-1173	0	A	BLACK	73: 72 71 69 68 65 64 63 62 61 60 59 58 56 54 / 52 50 49 48 47 45 42 41 38 37 36 34 33 / 32 31 30 29 28 27 26 24 23 20 19 18 17 / 16 13 12 11 10 9
SALEABLE	NOT APPLICABLE	34566-1183	0	B	ST GRY	73: 66 65 64 62 59 57 55 53 / 49 48 47 44 42 39 37 35 33 / 29 28 23 21 17 / 12 9 7
SALEABLE	NOT APPLICABLE	34566-1193	0	A	BLACK	73: 72 71 69 68 67 66 64 63 62 60 59 54 53 / 52 49 48 46 44 43 42 39 34 33 / 32 29 27 23 17 / 14 13 12 11 9 8 7 6 5 4 3 2 1
SALEABLE	NOT APPLICABLE	34566-1213	0	A	BLACK	73: 72 71 69 68 67 66 64 63 62 59 54 53 / 52 48 46 44 43 42 39 33 / 32 29 27 24 23 17 / 14 13 12 11 9 8 5 4 3 2 1
SALEABLE	NOT APPLICABLE	34566-1223	0	B	ST GRY	73: 67 66 65 63 62 59 57 55 53 / 48 43 42 39 37 35 33 / 29 27 26 23 21 17 / 12 9 7
SALEABLE	NOT APPLICABLE	34566-1233	0	B	ST GRY	73: 65 62 59 57 55 53 / 48 46 42 39 37 35 33 / 29 26 23 21 17 / 12 9 7
SALEABLE	NOT APPLICABLE	34566-1243	0	B	ST GRY	73: 50 48 46 59 57 55 53 / 39 37 35 33 / 29 23 21 17 / 15 12 7 6 5 4 3
SALEABLE	NOT APPLICABLE	34566-1253	9	B	ST GRY	73: 65 60 59 57 55 53 / 49 48 46 40 39 37 35 33 / 24 23 21 / 2
SALEABLE	NOT APPLICABLE	34566-1263	9	A	BLACK	NUMBERS IN BOLD MUST USE SAE WIRE MEETING SAE J1128, WIRE SIZE (NO.20) OR (NO.18 MAX. O.D. OF 2.06 MM) PER G.M. DRAWING NUMBER 12582682. / 73: 72 71 69 68 67 66 64 63 62 59 56 53 / 50 48 46 44 43 42 39 36 35 33 / 32 30 29 27 24 23 20 17 / 14 13 12 11 9 8 5 4 3 2 1
SALEABLE	NOT APPLICABLE	34566-1273	0	A	BLACK	73: 70 69 68 65 64 63 61 59 58 57 56 / 52 50 49 48 47 41 38 37 36 34 33 / 32 31 30 29 28 27 24 23 20 19 18 / 16 13 12 11 10 9 1
SALEABLE	NOT APPLICABLE	34566-1283	0	A	BLACK	73: 72 71 70 69 68 66 65 64 63 61 59 58 57 56 54 / 52 50 49 48 47 42 41 38 37 36 34 33 / 32 31 30 29 28 27 26 24 23 20 19 18 / 16 13 12 11 10 9

MX123 52/66/73/80-WAY RECEPTACLE ASSY SEALED PIN OUT SHEET

STATUS	GM PART #	HRNS CONN ASSY			TPA	GROMMET CAP
		MATERIAL/PART NUMBER	WIRE DRESS OPTION	KEY OPTION Fp	COLOR OPTION Fp	NUMBERS INDICATE CAVITIES OPEN FOR CIRCUITS Fp
SALEABLE	NOT APPLICABLE	34566-1293	0	A	BLACK	73
SALEABLE	NOT APPLICABLE	34566-1313	0	H	ST GRY	80 78 72 71 70 69 68 66 65 64 63 61 58 57 56 55 54 53 46 44 43 42 40 37 35 32 30 29 27 26 21 20 19 18 17 15 12 8 6 5 3 2
SALEABLE	NOT APPLICABLE	34566-1323	0	A	BLACK	73
SALEABLE	NOT APPLICABLE	34566-1333	0	A	BLACK	73
SALEABLE	NOT APPLICABLE	34566-1343	0	A	BLACK	73
SALEABLE	NOT APPLICABLE	34566-1353	0	H	ST GRY	79 78 77 76 75 74 73 72 71 70 69 68 66 65 64 63 61 60 59 58 57 56 53 50 44 43 41 40 39 38 37 35 34 32 30 29 27 26 22 21 20 19 18 17 13 12 11 8 6 5 3 2
SALEABLE	NOT APPLICABLE	34566-1363	0	A	BLACK	73
SALEABLE	NOT APPLICABLE	34566-1373	0	B	ST GRY	73
SALEABLE	NOT APPLICABLE	34566-1383	0	B	ST GRY	73
SALEABLE	NOT APPLICABLE	34566-1393	0	A	BLACK	70 67 66 61 58 57 55 54 47 45 44 43 42 41 39 37 34 73 32 30 27 25 24 21 20 19 18 13 11 6 5 3 1
SALEABLE	NOT APPLICABLE	34566-1423	0	B	ST GRY	68 67 66 65 61 60 59 58 57 54 53 51 50 49 48 47 46 45 43 42 41 40 39 38 37 35 34 33 73 32 31 30 26 24 23 22 21 20 16 15 14 13 10 9 8 7 6 5 4
SALEABLE	NOT APPLICABLE	34566-1433	0	B	ST GRY	73
SALEABLE	NOT APPLICABLE	34566-1443	0	B	ST GRY	73
SALEABLE	NOT APPLICABLE	34566-1453	0	B	ST GRY	73
SALEABLE	NOT APPLICABLE	34566-1463	0	A	BLACK	52 50 49 68 67 66 65 64 63 62 61 60 59 58 56 41 38 37 36 34 33 73 32 31 30 29 28 27 24 23 20 19 18 17 16 13 12 11 10 9 7 6 4 3 1

MX123 52/66/73/80-WAY RECEPTACLE ASSY SEALED PIN OUT SHEET

STATUS	GM PART #	HRNS CONN ASSY			TPA	GROMMET CAP
		MATERIAL/PART NUMBER	WIRE DRESS OPTION	KEY OPTION Fp	COLOR OPTION Fp	NUMBERS INDICATE CAVITIES OPEN FOR CIRCUITS Fp
SALEABLE	NOT APPLICABLE	34566-1473	0	A	BLACK	72 71 69 68 67 66 64 63 62 59 54 53 52 49 48 46 44 43 42 39 34 33 73 32 29 27 24 23 17 14 13 12 11 9 8 7 6 5 4 3 2 1
SALEABLE	NOT APPLICABLE	34566-1483	0	A	BLACK	72 71 69 68 65 64 63 61 59 58 56 52 50 49 47 41 38 37 36 34 33 73 32 31 30 29 28 27 24 23 20 19 18 17 16 13 12 11 10 9 1
SALEABLE	NOT APPLICABLE	34566-1493	0	B	ST GRY	68 59 58 57 55 53 49 48 46 39 38 37 35 33 73 29 23 22 21 18 17 12 11 10 7
SALEABLE	NOT APPLICABLE	34566-1513	0	B	ST GRY	65 59 57 55 53 49 48 46 39 37 35 33 73 29 23 21 17 12 7
SALEABLE	NOT APPLICABLE	34566-1523	0	A	BLACK	70 69 68 65 64 59 58 56 54 52 50 49 47 42 41 38 37 36 34 73 32 31 30 29 28 27 26 23 20 19 18 17 16 13 12 11 10 9 8 1
SALEABLE	NOT APPLICABLE	34566-1533	0	A	BLACK	72 71 70 69 68 65 64 63 61 59 58 57 56 52 51 50 49 47 41 38 37 36 34 33 73 32 31 30 29 28 27 24 23 20 19 18 17 16 13 12 11 10 9 3 2 1
SALEABLE	NOT APPLICABLE	34566-1543	0	B	ST GRY	69 68 66 59 57 55 53 49 48 46 39 37 35 33 73 29 23 21 11 10 7
SALEABLE	12582677	34566-1553	0	A	BLACK	73
TOOL DESIGN SALEABLE	NOT APPLICABLE	34566-1563	9	A	BLACK	73
TOOL DESIGN SALEABLE	NOT APPLICABLE	34566-1573	9	H	ST GRY	
SALEABLE	NOT APPLICABLE	34566-1583	0	A	BLACK	70 67 66 65 61 58 57 55 54 49 47 45 44 43 42 41 39 37 34 73 32 30 27 25 24 21 20 19 18 17 15 13 11 9 8 6 5 3 1
SALEABLE	NOT APPLICABLE	34566-1593	0	B	ST GRY	67 65 61 60 59 58 57 54 53 51 50 49 48 47 46 45 43 42 40 39 37 34 33 73 32 31 30 26 24 23 22 21 20 16 15 14 13 10 9 8 7 6 5 4
SALEABLE	NOT APPLICABLE	34566-1613	0	H	ST GRY	79 78 77 76 75 74 73 72 71 70 69 68 66 65 64 63 61 60 59 58 57 56 53 50 44 43 41 40 39 38 37 35 34 33 32 30 29 27 26 24 23 22 21 20 19 18 17 14 13 12 11 10 9 8 6 5 3 2
SALEABLE	NOT APPLICABLE	34566-1623	0	B	ST GRY	66 65 62 59 57 55 53 48 47 42 39 37 35 33 73 29 26 23 21 17 12 9 7
SALEABLE	NOT APPLICABLE	34566-1633	0	B	ST GRY	69 68 66 59 57 55 53 50 48 47 39 37 35 33 73 29 23 21 17 15 12 11 10 7 6 5 4 3

MX123 52/66/73/80-WAY RECEPTACLE ASSY SEALED PIN OUT SHEET

STATUS	GM PART #	HRNS CONN ASSY			TPA	GROMMET CAP																		
		MATERIAL/PART NUMBER	WIRE DRESS OPTION	KEY OPTION Fp	COLOR OPTION Fp	NUMBERS INDICATE CAVITIES OPEN FOR CIRCUITS Fp																		
SALEABLE	NOT APPLICABLE	34566-1643	0	B	ST GRY				69	68		66							59		57		55		53
								50		48		46							39		37		35		33
						73							29						23		21				17
											15			12	11	10			7	6	5	4	3		
SALEABLE	NOT APPLICABLE	34566-1653	0	B	ST GRY							66							59		57		55		53
								50		48		46							39		37		35		33
						73							29						23		21				17
											15			12					7	6	5	4	3		
SALEABLE	NOT APPLICABLE	34566-1663	0	B	ST GRY							66							59		57		55		53
								50		48		46							39		37		35		33
						73							29						23		21				
											15								7	6	5	4	3		
SALEABLE	NOT APPLICABLE	34566-1673	0	A	BLACK	72	71	70	69	68	67	66	65	64	63	62		60	59				55	54	53
						52			49	48			45	44	43	42	41	40	39				35	34	33
						73				32			29		27		25	24	23				19	18	17
										16			13	12	11		9	8	7	6	5	4	3	2	1
SALEABLE	NOT APPLICABLE	34566-1683	0	B	ST GRY						67	66			63				59	58	57	56	55		53
								50	49	48					43				39	38	37	36	35		33
						73							29		27				23	22	21				
										16	15	14	13					8	7	6	5	4	3		
SALEABLE	NOT APPLICABLE	34566-1693	0	B	ST GRY							66		64					59		57		55		53
									49	48		46							39		37		35		33
						73				32			29						23		21				17
														12					7						
SALEABLE	NOT APPLICABLE	34566-1713	0	B	ST GRY		71	70		68		66	65	64	63			60	59	58	57	56	55	54	53
							51	50	49	48		46	45		43		41	40	39	38	37	36	35		33
						73				32	31	30						24	23	22		20	19		
										16	15		13	12	11	10	9	8	7	6	5	4	3	2	
SALEABLE	NOT APPLICABLE	34566-1723	0	B	ST GRY		71	70		68		66	65					60	59	58	57			54	53
							51	50	49	48		46	45		43		41	40	39	38	37	36	35		33
						73				32	31	30						24	23	22		20			
										16	15		13	12	11	10	9	8	7	6	5	4			
SALEABLE	NOT APPLICABLE	34566-1733	0	A	BLACK			70		68	67	66	65							58	57		55		
									49		47			44	43	42	41		39		37		35		
						73				32		30			27		25	24			21	20	19	18	17
										16	15		13			10	9	8		6	5		3	2	1
SALEABLE	NOT APPLICABLE	34566-1743	0	A	BLACK			70			67	66	65							58	57		55		
									49		47			44	43	42	41		39		37		35		
						73				32		30			27		25	24			21	20	19	18	17
										16	15		13			10	9	8		6	5		3	2	1
SALEABLE	NOT APPLICABLE	34566-1753	0	A	BLACK			70			67	66	65							58	57		55		
									49		47			44	43	42	41		39		37		35		
						73				32					27		25	24			21	20	19	18	17
											15		13				9	8		6	5		3		1
SALEABLE	NOT APPLICABLE	34566-1763	0	B	ST GRY						67		65				61	60	59	58	57			54	53
							51	50	49	48	47	46	45		43			40	39		37			34	33
						73				32	31	30				26		24	23	22	21	20			
										16	15	14	13			10	9	8	7	6	5	4			
SALEABLE	NOT APPLICABLE	34566-1773	0	C	BLUE	72		70			67	66			63	62			59		57				53
						52	51					46		44		42		40	39					34	33
						73						30			27	26	25			22	21	20			
											15	14				10	9			6	5	4			
SALEABLE	NOT APPLICABLE	34566-1783	0	C	BLUE	72		70			67	66			63	62			59		57				53
						52	51					46		44		42		40	39					34	33
						73						30				26	25			22	21	20			
											15	14				10	9			6	5	4			
SALEABLE	NOT APPLICABLE	34566-1793	0	A	BLACK				69						63	62	61			58	57	56	55	54	53
						52	51		49					44	43	42	41				37	36	35	34	33
						73				32			29	28	27	26							19	18	
										16			13	12	11	10							3		

molex

MX123 52/66/73/80-WAY RECEPTACLE ASSY SEALED PIN OUT SHEET

STATUS	GM PART #	HRNS CONN ASSY			TPA	GROMMET CAP
		MATERIAL/PART NUMBER	WIRE DRESS OPTION	KEY OPTION Fp	COLOR OPTION Fp	NUMBERS INDICATE CAVITIES OPEN FOR CIRCUITS Fp
SALEABLE	NOT APPLICABLE	34566-1813	0	B	ST GRY	72 71 70 68 67 66 62 61 60 59 58 57 56 55 54 53 52 51 50 48 47 46 42 41 40 39 38 37 36 35 34 33 73 32 31 30 29 28 27 26 25 24 23 16 15 14 13 10 9 8
SALEABLE	NOT APPLICABLE	34566-1823	0	A	BLACK	72 71 70 69 68 66 65 64 61 59 58 56 54 53 52 50 49 47 42 41 38 37 36 34 33 73 32 31 30 29 28 27 26 24 23 22 21 20 19 18 17 16 13 12 11 10 9 8 1
SALEABLE	NOT APPLICABLE	34566-1833	0	A	BLACK	68 65 63 61 59 58 56 52 50 47 41 38 37 36 34 33 73 32 31 30 29 28 27 25 24 23 20 19 18 17 16 13 12 11 10 1
SALEABLE	NOT APPLICABLE	34566-1843	0	A	BLACK	68 65 63 61 59 58 56 53 52 50 47 41 38 37 36 35 34 33 73 32 31 30 29 28 27 24 23 22 21 20 19 18 17 16 15 14 13 12 11 10 1
SALEABLE	NOT APPLICABLE	34566-1853	0	A	BLACK	72 70 69 68 67 65 63 61 60 57 56 55 54 53 52 50 49 48 47 44 43 41 40 37 36 35 34 33 73 30 29 28 25 24 21 20 19 18 17 16 15 11 10 9 8 7 6 5 4 3 2 1
SALEABLE	NOT APPLICABLE	34566-1863	0	B	ST GRY	68 67 66 65 64 63 46 45 43 73 32 30 29 28 27 17 16 10
SALEABLE	NOT APPLICABLE	34566-1873	0	C	BLUE	72 70 67 66 63 62 59 57 53 52 51 46 44 42 40 39 34 33 73 32 30 27 26 25 22 21 20 15 14 10 9 6 5 4
SALEABLE	NOT APPLICABLE	34566-1883	0	A	BLACK	70 68 67 66 65 58 57 55 49 47 44 43 42 41 40 39 37 35 73 32 30 27 25 24 21 20 19 18 17 16 15 13 10 9 8 6 5 3 2 1
SALEABLE	NOT APPLICABLE	34566-1893	0	C	BLUE	72 70 66 63 59 57 53 52 51 46 44 42 40 39 34 33 73 32 30 27 26 25 22 21 20 15 14 10 9 6 5 4
SALEABLE	NOT APPLICABLE	34566-1913	0	B	ST GRY	72 70 68 66 60 59 55 54 53 52 50 48 46 40 39 35 34 33 73 32 31 30 29 28 27 26 25 24 16 10 9 8
SALEABLE	NOT APPLICABLE	34566-1923	0	A	BLACK	69 63 58 56 55 54 53 52 51 49 44 43 42 41 36 35 34 33 73 32 28 26 19 18 16 12 10 3
SALEABLE	NOT APPLICABLE	34566-1933	0	A	BLACK	70 67 66 65 58 57 55 49 47 44 43 42 41 40 39 37 35 73 32 30 27 25 24 21 20 19 18 17 16 15 13 10 9 8 6 5 3 2 1
SALEABLE	NOT APPLICABLE	34566-1943	0	A	BLACK	70 67 66 65 58 57 55 51 49 47 44 43 42 41 40 39 37 35 73 32 30 27 25 24 21 20 19 18 17 16 15 13 10 9 8 6 5 3 2 1
SALEABLE	NOT APPLICABLE	34566-1953	0	C	BLUE	72 70 66 63 59 57 53 52 51 48 47 46 44 42 40 39 34 33 73 30 26 25 22 21 20 15 14 10 9 6 5 4
SALEABLE	NOT APPLICABLE	34566-1963	0	C	BLUE	72 70 66 63 59 57 53 52 51 46 44 42 40 39 34 33 73 30 26 25 22 21 20 15 14 10 9 6 5 4

MX123 52/66/73/80-WAY RECEPTACLE ASSY SEALED PIN OUT SHEET

STATUS	GM PART #	HRNS CONN ASSY			TPA	GROMMET CAP
		MATERIAL/PART NUMBER	WIRE DRESS OPTION	KEY OPTION Fp	COLOR OPTION Fp	NUMBERS INDICATE CAVITIES OPEN FOR CIRCUITS Fp
SALEABLE	NOT APPLICABLE	34566-1973	0	A	BLACK	69 63 56 55 54 53 52 51 49 44 43 42 41 36 35 34 33 73 32 28 26 23 21 19 18 16 12 10 8 5 3
SALEABLE	NOT APPLICABLE	34566-1983	0	B	ST GRY	73
SALEABLE	NOT APPLICABLE	34566-1993	0	C	BLUE	73
SALEABLE	NOT APPLICABLE	34566-2013	0	A	BLACK	71 70 65 60 59 58 57 54 53 51 50 49 48 46 45 43 41 40 39 37 36 35 33 73 32 31 30 24 23 22 20 16 15 13 12 11 10 9 8 7 6 5 4
SALEABLE	NOT APPLICABLE	34566-2023	0	A	BLACK	70 68 67 66 65 58 57 55 49 47 44 43 42 41 39 37 35 73 32 30 27 25 24 21 20 19 18 17 15 13 9 8 6 5 3 1
SALEABLE	NOT APPLICABLE	34566-2033	0	A	BLACK	71 70 65 64 60 59 58 57 55 54 53 51 50 49 48 46 45 43 41 40 39 37 36 35 33 73 32 31 30 24 23 22 20 16 15 13 12 11 10 9 8 7 6 5 4 3 2
SALEABLE	NOT APPLICABLE	34566-2043	0	A	BLACK	70 67 66 65 58 57 55 49 47 44 43 42 41 39 37 35 73 32 30 27 25 24 21 20 19 18 17 15 13 9 8 6 5 3 1
SALEABLE	NOT APPLICABLE	34566-2053	0	B	ST GRY	70 68 67 66 65 58 57 55 49 47 44 43 42 41 39 37 73 32 30 27 25 24 23 21 20 19 18 13 8 6 5 3 1
SALEABLE	NOT APPLICABLE	34566-2063	0	H	ST GRY	78 72 71 70 69 68 66 65 64 63 61 58 57 56 53 52 50 44 43 41 40 37 35 34 32 30 29 27 26 22 21 20 19 18 17 16 14 12 10 9 8 6 5 3 2
SALEABLE	NOT APPLICABLE	34566-2073	0	H	ST GRY	78 72 71 70 69 68 66 65 64 63 61 58 57 56 53 52 50 44 43 41 40 37 35 34 32 30 29 27 26 22 21 20 19 18 17 16 12 6 5 3 2
SALEABLE	NOT APPLICABLE	34566-2083	0	H	ST GRY	78 72 71 70 69 68 67 66 65 64 63 61 58 57 56 53 52 51 50 44 43 41 40 37 35 34 32 30 29 27 26 22 21 20 19 18 17 16 12 8 7 6 5 3 2 1
SALEABLE	NOT APPLICABLE	34566-2093	0	A	BLACK	68 65 63 61 59 58 56 52 50 47 41 38 37 36 34 33 73 32 31 30 29 28 27 25 24 23 20 19 18 17 16 13 12 11 10 9 1
SALEABLE	NOT APPLICABLE	34566-2113	0	H	ST GRY	79 78 77 76 75 74 73 72 71 70 69 68 66 65 64 63 61 60 59 58 57 56 55 53 52 50 44 43 42 41 40 39 38 37 35 34 33 32 30 29 27 26 22 21 20 19 18 17 16 14 13 12 11 10 9 8 6 5 3 2
SALEABLE	NOT APPLICABLE	34566-2123	0	H	ST GRY	79 78 77 76 75 74 73 72 71 70 69 68 66 65 64 63 61 60 59 58 57 56 55 53 52 50 44 43 42 41 40 39 38 37 35 34 33 32 30 29 27 26 22 21 20 19 18 17 16 13 12 8 6 5 3 2
SALEABLE	NOT APPLICABLE	34566-2133	0	B	ST GRY	71 70 65 64 60 59 58 57 55 54 53 51 50 49 48 46 45 43 41 40 39 37 36 35 33 73 32 31 30 24 23 22 20 16 15 13 12 11 10 9 8 7 6 5 4 3 2

MX123 52/66/73/80-WAY RECEPTACLE ASSY SEALED PIN OUT SHEET

STATUS	GM PART #	HRNS CONN ASSY			TPA	GROMMET CAP																				
		MATERIAL/PART NUMBER	WIRE DRESS OPTION	KEY OPTION Fp	COLOR OPTION Fp	NUMBERS INDICATE CAVITIES OPEN FOR CIRCUITS Fp																				
SALEABLE	NOT APPLICABLE	34566-2143	0	B	ST GRY		71	70					65					60	59	58	57			54	53
							51	50	49	48		46	45		43		41	40	39		37	36	35		33
						73				32	31	30						24	23	22		20			
										16	15		13	12	11	10	9	8	7	6	5	4			
SALEABLE	NOT APPLICABLE	34566-2153	0	A	BLACK			70		68	67	66	65							58	57		55		
									49		47			44	43	42	41		39		37				
						73				32		30			27		25	24	23		21	20	19	18	
													13					8		6	5		3		1
SALEABLE	NOT APPLICABLE	34566-2163	0	A	BLACK			70			67	66					61			58			55	54	
									49		47		45	44	43	42	41		39		37			34	
						73				32					27			24			21	20	19	18	17
											15		13		11		9			6	5		3		1
SALEABLE	NOT APPLICABLE	34566-2173	0	A	BLACK			70			67	66	65				61			58			55	54	
									49		47		45	44	43	42	41		39		37			34	
						73				32		30			27		25	24			21	20	19	18	17
											15		13		11		9	8		6	5		3		1
SALEABLE	NOT APPLICABLE	34566-2183	0	A	BLACK			70			67	66								58	57		55		
									49		47			44	43	42	41		39		37				
						73				32					27			24			21	20	19	18	17
											15		13				9			6	5		3		1
SALEABLE	NOT APPLICABLE	34566-2193	0	A	BLACK			70			67	66	65							58	57		55		
									49		47			44	43	42	41		39		37				
						73				32		30			27		25	24			21	20	19	18	17
											15		13				9	8		6	5		3		1
SALEABLE	NOT APPLICABLE	34566-2213	9	H	ST GRY		79	78	77	76	75	74	73	72	71	70	69	68		66	65	64	63		61
						60	59	58	57	56			53			50						44	43		41
						40	39	38	37		35	34	33	32		30	29		27	26		24	23	22	21
						20	19	18	17			14	13	12	11	10	9	8		6	5		3	2	
SALEABLE	NOT APPLICABLE	34566-2223	0	A	BLACK	72	71	70	69	68	67	66		64	63	62		60	59				55	54	53
						52			49	48		46		44	43	42		40	39				35	34	33
						73				32			29		27			24	23				19	18	17
										16		14	13	12	11		9	8	7	6	5	4	3	2	1
SALEABLE	NOT APPLICABLE	34566-2233	0	A	BLACK				69						63					58		56		54	
						52	51		49					44	43	42	41					36	35	34	33
						73				32				28		26							19	18	
										16				12		10							3		
SALEABLE	NOT APPLICABLE	34566-2243	0	H	ST GRY		79	78	77	76	75	74	73	72	71	70	69	68		66	65	64	63		61
						60	59	58	57	56			53	52		50						44	43		41
						40	39	38	37		35	34	33	32		30	29		27	26		24	23	22	21
						20	19	18	17	16		14	13	12	11	10	9	8		6	5		3	2	
SALEABLE	NOT APPLICABLE	34566-2253	0	A	BLACK	72	71	70	69	68		66	65	64	63		61		59	58		56		54	53
						52		50	49		47					42	41			38	37	36		34	33
						73				32	31	30	29	28	27	26		24	23	22	21	20	19	18	17
										16			13	12	11	10	9	8							1
SALEABLE	NOT APPLICABLE	34566-2263	0	A	BLACK				69						63					58		56	55	54	53
						52	51	50	49					44	43	42	41					36	35	34	33
						73				32				28		26							19	18	
										16		14		12		10							3		
SALEABLE	NOT APPLICABLE	34566-2273	0	A	BLACK				69						63	62	61			58	57	56	55	54	53
						52	51	50	49					44	43	42	41				37	36	35	34	33
						73				32			29	28	27	26							19	18	
										16		14	13	12	11	10							3		
SALEABLE	NOT APPLICABLE	34566-2283	0	B	ST GRY					68	67	66	65	64	63								55		
									49	48		46	45	44	43										
						73				32		30	29	28	27										17
										16						10									
SALEABLE	NOT APPLICABLE	34566-2293	0	C	BLUE	72		70		68		66			63				59		57				53
						52	51			48	47	46		44		42		40	39					34	33
						73						30				26	25			22	21				
											15	14				10	9			6					

MX123 52/66/73/80-WAY RECEPTACLE ASSY SEALED PIN OUT SHEET

STATUS	GM PART #	HRNS CONN ASSY			TPA	GROMMET CAP
		MATERIAL/PART NUMBER	WIRE DRESS OPTION	KEY OPTION Fp	COLOR OPTION Fp	NUMBERS INDICATE CAVITIES OPEN FOR CIRCUITS Fp
SALEABLE	NOT APPLICABLE	34566-2313	0	C	BLUE	72 70 66 63 59 57 53 52 51 46 44 42 40 39 34 33 73 30 26 25 22 21 15 14 10 9 6
SALEABLE	NOT APPLICABLE	34566-2323	0	C	BLUE	72 70 68 66 63 59 57 53 52 51 48 47 46 44 42 40 39 34 33 73 30 26 25 22 21 20 15 14 10 9 6 5 4
SALEABLE	NOT APPLICABLE	34566-2333	0	A	BLACK	71 69 68 65 64 63 61 59 57 56 52 50 49 47 41 39 38 37 36 34 33 73 32 31 30 29 28 27 24 23 22 20 19 18 16 13 12 11 10 9 1
SALEABLE	NOT APPLICABLE	34566-2343	0	A	BLACK	72 70 68 67 66 65 58 57 55 49 47 44 43 42 41 39 37 35 73 32 30 27 25 24 21 20 19 18 17 15 14 13 9 8 6 5 3 1
SALEABLE	NOT APPLICABLE	34566-2353	0	A	BLACK	72 70 67 66 65 58 57 55 49 47 44 43 42 41 39 37 35 73 32 30 27 25 24 21 20 19 18 17 15 14 13 9 8 6 5 3 1
SALEABLE	NOT APPLICABLE	34566-2363	0	C	BLUE	72 70 67 66 63 62 59 57 53 52 51 46 44 42 40 39 38 34 33 73 30 27 26 25 22 21 20 15 14 10 9 6 5 4
SALEABLE	NOT APPLICABLE	34566-2373	0	B	ST GRY	68 67 66 65 64 61 60 59 58 57 55 54 53 51 50 49 48 47 46 45 43 42 41 40 39 38 37 35 34 33 73 32 31 30 26 24 23 22 21 20 16 15 14 13 10 9 8 7 6 5 4 3 2
SALEABLE	NOT APPLICABLE	34566-2383	0	B	ST GRY	65 59 57 55 53 50 49 48 46 39 37 35 33 73 29 24 23 21 15 7 6 5 4 3
SALEABLE	NOT APPLICABLE	34566-2393	0	B	ST GRY	59 57 55 53 50 49 48 46 39 37 35 33 73 29 23 21 17 15 12 7 6 5 4 3
SALEABLE	NOT APPLICABLE	34566-2413	0	A	BLACK	70 67 66 65 58 57 55 49 47 44 43 42 41 39 37 35 73 32 30 27 25 24 21 20 19 18 17 15 14 13 9 8 6 5 3 1
SALEABLE	NOT APPLICABLE	34566-2423	0	A	BLACK	63 58 57 56 55 54 53 52 51 49 44 43 42 41 36 35 34 33 73 32 28 26 19 18 16 12 10 7 6 3
SALEABLE	NOT APPLICABLE	34566-2433	0	A	BLACK	69 63 56 55 54 53 52 51 49 44 43 42 41 36 35 34 33 73 32 28 26 23 19 18 16 12 10 7 6 3
SALEABLE	NOT APPLICABLE	34566-2443	0	C	BLUE	72 70 68 66 63 59 57 53 52 51 48 47 46 44 40 39 34 33 73 32 30 26 25 22 21 20 15 14 13 10 9 6 5 4
SALEABLE	NOT APPLICABLE	34566-2453	0	A	BLACK	71 69 65 64 63 58 57 56 55 54 53 52 51 49 45 44 43 42 41 37 36 35 34 33 73 32 30 28 26 23 19 18 16 12 10 7 6 3
SALEABLE	NOT APPLICABLE	34566-2463	0	A	BLACK	71 69 65 64 63 57 56 55 54 53 52 51 49 45 44 43 42 41 37 36 35 34 33 73 32 30 29 28 26 23 19 18 16 12 10 7 6 3

MX123 52/66/73/80-WAY RECEPTACLE ASSY SEALED PIN OUT SHEET

STATUS	GM PART #	HRNS CONN ASSY			TPA	GROMMET CAP
		MATERIAL/PART NUMBER	WIRE DRESS OPTION	KEY OPTION Fp	COLOR OPTION Fp	NUMBERS INDICATE CAVITIES OPEN FOR CIRCUITS Fp
SALEABLE	NOT APPLICABLE	34566-2473	0	A	BLACK	73: 70, 68, 67, 66, 65, 58, 57, 55; 49, 47, 44, 43, 42, 41, 39, 37, 35; 32, 30, 27, 25, 24, 21, 20, 19, 18, 17; 15, 14, 13, 9, 8, 6, 5, 3, 1
SALEABLE	NOT APPLICABLE	34566-2483	0	A	BLACK	73: 69, 63, 62, 61, 58, 57, 56, 55, 54, 53; 52, 51, 49, 44, 43, 42, 41, 37, 36, 35, 34, 33; 32, 29, 28, 27, 26, 23, 19, 18; 16, 13, 12, 11, 10, 8, 3
SALEABLE	NOT APPLICABLE	34566-2493 SAME AS P/N 34566-3863	0	B	ST GRY	73: 72, 71, 70, 68, 67, 66, 62, 61, 60, 59, 58, 57, 56, 55, 54, 53; 52, 51, 50, 48, 47, 46, 42, 41, 40, 39, 38, 37, 36, 35, 34, 33; 32, 31, 30, 29, 28, 27, 26, 25, 24, 17; 16, 15, 14, 13, 10, 8, 2, 1
SALEABLE	NOT APPLICABLE	34566-2513	0	C	BLUE	73: 72, 70, 68, 67, 66, 63, 62, 59, 57, 53; 52, 51, 48, 47, 46, 44, 42, 40, 39, 34, 33; 32, 30, 27, 26, 25, 22, 21, 20; 15, 14, 10, 9, 6, 5, 4
SALEABLE	NOT APPLICABLE	34566-2523	0	A	BLACK	73: 72, 71, 70, 69, 68, 67, 66, 65, 64, 63, 62, 60, 59, 55, 54, 53; 52, 49, 48, 45, 44, 43, 42, 41, 40, 39, 35, 34, 33; 32, 29, 28, 27, 25, 24, 23, 19, 18, 17; 16, 13, 12, 11, 9, 8, 7, 6, 5, 4, 3, 2, 1
SALEABLE	NOT APPLICABLE	34566-2533	0	B	ST GRY	73: 67, 66, 65, 63, 59, 58, 57, 56, 55, 53; 50, 49, 48, 46, 45, 43, 39, 38, 37, 36, 35, 34, 33; 29, 27, 23, 22, 21, 18; 16, 15, 14, 13, 8, 7, 6, 5, 4, 3
SALEABLE	NOT APPLICABLE	34566-2543	0	C	BLUE	73: 72, 70, 66, 63, 59, 57, 53; 52, 51, 46, 44, 42, 40, 39, 34, 33; 32, 30, 27, 26, 25, 22, 21; 15, 14, 10, 9, 6
SALEABLE	NOT APPLICABLE	34566-2553	9	B	ST GRY	73: 72, 71, 70, 68, 67, 66, 62, 61, 60, 59, 58, 57, 56, 55, 54, 53; 52, 51, 50, 48, 47, 46, 42, 41, 40, 39, 38, 37, 36, 35, 34, 33; 32, 31, 30, 29, 28, 27, 26, 25, 24, 23; 16, 15, 14, 13, 10, 9, 8
SALEABLE	NOT APPLICABLE	34566-2563	9	A	BLACK	73: 69, 63, 62, 61, 58, 57, 56, 55, 54, 53; 52, 51, 50, 49, 44, 43, 42, 41, 37, 36, 35, 34, 33; 32, 29, 28, 27, 26, 19, 18; 16, 14, 13, 12, 11, 10, 3
SALEABLE	NOT APPLICABLE	34566-2573	9	C	BLUE	73: 72, 70, 67, 66, 63, 62, 59, 57, 53; 52, 51, 46, 44, 42, 40, 39, 34, 33; 30, 26, 25, 22, 21, 20; 15, 14, 10, 9, 6, 5, 4
SALEABLE	NOT APPLICABLE	34566-2583	0	A	BLACK	73: 69, 63, 58, 56, 55, 54, 53; 52, 51, 50, 49, 44, 43, 42, 41, 39, 36, 35, 34, 33; 32, 28, 26, 19, 18; 16, 14, 12, 10, 3
SALEABLE	NOT APPLICABLE	34566-2593	0	C	BLUE	73: 72, 70, 66, 63, 62, 59, 57, 53; 52, 51, 46, 44, 42, 40, 39, 34, 33; 32, 30, 27, 26, 25, 22, 21; 15, 14, 10, 9, 6
SALEABLE	NOT APPLICABLE	34566-2613	9	C	BLUE	73: 72, 70, 67, 66, 63, 62, 59, 57, 53; 52, 51, 46, 44, 42, 40, 39, 34, 33; 30, 27, 26, 25, 22, 21, 20; 15, 14, 10, 9, 6, 5, 4
SALEABLE	NOT APPLICABLE	34566-2623	0	A	BLACK	73: 71, 69, 68, 67, 65, 64, 63, 61, 59, 58, 57, 56; 50, 49, 47, 41, 38, 37, 36, 34, 33; 32, 31, 30, 29, 28, 27, 24, 23, 20, 19, 18; 16, 13, 12, 11, 10, 9, 7, 4
SALEABLE	NOT APPLICABLE	34566-2633	0	A	BLACK	73: 71, 69, 68, 67, 65, 64, 61, 59, 58, 57, 56; 50, 49, 47, 41, 38, 37, 36, 33; 32, 31, 30, 29, 28, 27, 24, 23, 20, 19, 18; 16, 11, 10, 9, 7, 4

molex

MX123 52/66/73/80-WAY RECEPTACLE ASSY SEALED PIN OUT SHEET

STATUS	GM PART #	HRNS CONN ASSY			TPA	GROMMET CAP
		MATERIAL/PART NUMBER	WIRE DRESS OPTION	KEY OPTION Fp	COLOR OPTION Fp	NUMBERS INDICATE CAVITIES OPEN FOR CIRCUITS Fp
SALEABLE	NOT APPLICABLE	34566-2643	0	A	BLACK	71 69 68 67 65 64 63 61 59 57 56 50 49 47 41 39 38 37 36 34 33 73 32 31 30 29 28 27 24 23 22 20 19 18 16 13 12 11 10 9 7 4
SALEABLE	NOT APPLICABLE	34566-2653	0	A	BLACK	71 69 68 67 65 64 61 59 57 56 50 49 47 41 39 38 37 36 33 73 32 31 30 29 28 27 24 23 22 20 19 18 16 11 10 9 7 4
SALEABLE	NOT APPLICABLE	34566-2663	0	H	ST GRY	79 78 77 76 75 74 73 72 71 70 69 68 66 65 64 63 61 60 59 58 57 56 53 50 44 43 41 40 39 38 37 35 34 32 30 29 27 26 22 21 20 19 18 17 13 12 8 6 5 3 2
SALEABLE	NOT APPLICABLE	34566-2673	0	H	ST GRY	79 78 77 76 75 74 73 72 71 70 69 68 66 65 64 63 61 60 59 58 57 56 53 52 50 44 43 41 40 39 38 37 35 34 32 30 29 27 26 22 21 20 19 18 17 16 13 12 8 6 5 3 2
SALEABLE	NOT APPLICABLE	34566-2683	0	H	ST GRY	78 72 71 70 69 68 67 66 65 64 63 61 60 59 58 57 56 53 52 51 50 48 47 44 43 41 40 37 35 34 32 30 29 27 26 22 21 20 19 18 17 16 13 12 8 7 6 5 4 3 2 1
SALEABLE	NOT APPLICABLE	34566-2693	0	B	ST GRY	71 70 68 66 65 60 59 58 57 54 53 51 50 49 48 46 45 43 42 41 40 39 38 37 36 35 33 73 32 31 30 24 23 22 20 16 15 13 12 11 10 9 8 7 6 5 4
SALEABLE	NOT APPLICABLE	34566-2713	0	A	BLACK	69 68 65 64 63 61 60 59 58 56 52 50 49 47 41 38 37 36 34 33 73 32 31 30 29 28 27 25 24 23 20 19 18 17 16 13 12 11 10 9 1
SALEABLE	NOT APPLICABLE	34566-2723	0	B	ST GRY	71 70 68 66 65 64 63 60 59 58 57 56 55 54 53 51 50 49 48 46 45 43 42 41 40 39 38 37 36 35 33 73 32 31 30 24 23 22 20 19 16 15 13 12 11 10 9 8 7 6 5 4 3 2
SALEABLE	NOT APPLICABLE	34566-2733	0	A	BLACK	70 68 67 66 65 58 57 55 49 47 44 43 42 41 39 37 73 32 30 27 25 24 23 21 20 19 18 17 16 15 13 10 9 8 6 5 3 2 1
SALEABLE	NOT APPLICABLE	34566-2743	0	C	BLUE	72 70 67 66 63 62 59 57 53 52 51 46 44 42 40 39 34 33 73 32 30 26 25 22 21 20 15 14 10 9 6 5 4
SALEABLE	NOT APPLICABLE	34566-2753	0	A	BLACK	63 62 61 58 57 56 55 54 53 52 51 49 44 43 42 41 37 36 35 34 33 73 32 29 28 27 26 19 18 16 15 13 12 11 10 3
SALEABLE	NOT APPLICABLE	34566-2763	0	B	ST GRY	72 71 70 68 67 66 62 61 60 59 58 57 56 55 54 53 52 51 50 48 47 46 42 41 40 39 38 37 36 35 34 33 73 32 31 30 29 28 27 26 25 24 16 15 14 13 10 9 8
SALEABLE	NOT APPLICABLE	34566-2773	0	H	ST GRY	61 53 32 20 9 5 1
SALEABLE	NOT APPLICABLE	34566-2783	9	H	ST GRY	61 53 32 20 9 5 1
SALEABLE	NOT APPLICABLE	34566-2793	9	A	BLACK	67 66 48 47 41 73 32 31 30 29 27 25 22 21 19 18 17 16 15 14 13 11 10 9 8 7 6 5 4 3 1

MX123 52/66/73/80-WAY RECEPTACLE ASSY SEALED PIN OUT SHEET

STATUS	GM PART #	HRNS CONN ASSY			TPA	GROMMET CAP
		MATERIAL/PART NUMBER	WIRE DRESS OPTION	KEY OPTION Fp	COLOR OPTION Fp	NUMBERS INDICATE CAVITIES OPEN FOR CIRCUITS Fp
SALEABLE	NOT APPLICABLE	34566-2813	9	B	ST GRY	72 71 70 69 68 67 66 65 64 62 61 60 59 58 57 56 55 54 52 51 50 49 48 46 44 40 37 36 73 32 31 30 29 28 27 25 24 21 20 18 16 14 13 12 11 10 9 7 6 4 3 2
SALEABLE	NOT APPLICABLE	34566-2823	0	A	BLACK	67 66 47 41 73 32 31 30 29 27 25 22 21 19 18 17 16 15 14 13 10 9 8 7 6 5 4 3
SALEABLE	NOT APPLICABLE	34566-2833	0	B	ST GRY	72 71 70 69 68 67 66 65 61 60 57 56 55 54 52 51 50 49 48 46 44 40 37 36 73 32 31 30 29 28 27 24 21 20 19 18 17 16 14 13 12 11 10 9 7 6 4 2
SALEABLE	NOT APPLICABLE	34566-2843	0	A	BLACK	67 66 47 41 73 32 31 30 29 27 25 22 21 19 18 17 16 15 14 13 10 9 8 7 6 5 4 3 1
SALEABLE	NOT APPLICABLE	34566-2853	0	B	ST GRY	72 71 70 69 68 67 66 65 64 63 61 60 57 56 55 54 52 51 50 49 48 46 44 40 37 36 73 32 31 30 29 28 27 24 21 20 19 18 16 14 13 12 11 10 9 7 6 4 3 2
SALEABLE	NOT APPLICABLE	34566-2863	0	A	BLACK	72 71 70 69 68 67 66 64 63 62 60 59 55 54 53 52 49 48 46 44 43 42 40 39 35 34 33 73 32 29 28 27 24 23 19 18 17 16 14 13 12 11 9 8 7 6 5 4 3 2 1
SALEABLE	NOT APPLICABLE	34566-2873	0	B	ST GRY	72 71 70 69 68 67 66 59 58 57 56 55 53 52 51 50 49 48 47 39 38 37 36 35 33 73 23 22 21 15 11 10 8 6 5 4 3
SALEABLE	NOT APPLICABLE	34566-2883	0	A	BLACK	70 69 63 62 61 58 57 56 55 54 53 52 51 49 44 43 42 41 37 36 34 73 32 29 28 27 26 19 18 16 13 12 11 10 3
SALEABLE	NOT APPLICABLE	34566-2893	0	A	BLACK	72 69 67 63 60 57 56 53 49 47 46 44 43 40 37 36 35 33 73 31 30 29 28 24 21 20 17 16 15 14 13 11 10 5 4 3 2 1
SALEABLE	NOT APPLICABLE	34566-2913	0	B	ST GRY	68 67 64 58 46 45 38 73 32 30 29 28 27 22 17 15 13 10 1
SALEABLE	NOT APPLICABLE	34566-2923	0	B	ST GRY	68 67 64 46 45 73 32 30 29 28 27 17 15 13 10
SALEABLE	NOT APPLICABLE	34566-2933	0	A	BLACK	72 69 67 63 60 57 56 53 49 47 44 43 40 37 36 35 33 73 31 30 29 28 24 21 20 17 16 15 14 11 10 5 4 3 2 1
SALEABLE	NOT APPLICABLE	34566-2943	0	B	ST GRY	68 67 64 63 59 57 46 45 43 39 37 73 32 30 29 28 27 21 10 6 5 4 3
SALEABLE	NOT APPLICABLE	34566-2953	0	B	ST GRY	68 67 64 63 59 46 45 43 39 34 73 32 30 29 28 27 10 6 5 4 3
SALEABLE	NOT APPLICABLE	34566-2963	0	H	ST GRY	79 74 73 72 71 69 68 67 64 62 61 59 54 53 52 49 48 47 42 41 38 33 29 27 25 21 15 14 11 10 9 8 7

MX123 52/66/73/80-WAY RECEPTACLE ASSY SEALED PIN OUT SHEET

STATUS	GM PART #	HRNS CONN ASSY			TPA	GROMMET CAP
		MATERIAL/PART NUMBER	WIRE DRESS OPTION	KEY OPTION Fp	COLOR OPTION Fp	NUMBERS INDICATE CAVITIES OPEN FOR CIRCUITS Fp
SALEABLE	NOT APPLICABLE	34566-2973	0	G	BLUE	80 78 77 75 74 73 72 70 69 67 65 64 63 62 60 58 57 55 54 52 51 50 49 47 45 40 38 37 33 32 31 27 26 25 24 20 18 17 10 9 8 6 5 3 2 1
SALEABLE	NOT APPLICABLE	34566-9913	0	A	BLACK	72 71 68 67 66 65 64 59 50 48 47 46 45 40 39 38 73 31 30 25 24 22 21 20 17 14 9 7 6 5 4 2 1
SALEABLE	NOT APPLICABLE	34566-9923	0	A	BLACK	72 71 67 66 62 61 60 57 55 54 51 48 46 45 44 43 42 39 35 33 73 26 25 24 15 14 8 7 6 5 4 3 2
SALEABLE	NOT APPLICABLE	34566-9933	0	B	ST GRY	69 65 64 63 49 45 44 43 73 22 21 20 19 18 17 12 11 6 5 4 3 2 1
SALEABLE	NOT APPLICABLE	34566-9943	0	C	BLUE	71 69 65 64 61 60 58 56 55 54 50 49 45 43 41 37 36 35 73 31 29 28 24 23 19 18 17 16 13 12 11 8 7 3 2 1
SALEABLE	NOT APPLICABLE	34566-9953	0	A	BLACK	67 62 60 57 55 51 48 46 45 44 43 39 35 73 25 15 14 7 6 5 4 3 2
SALEABLE	NOT APPLICABLE	34566-9963	0	B	ST GRY	68 67 64 63 58 55 46 45 43 38 35 73 32 30 29 28 27 22 19 17 15 13 10 1
SALEABLE	NOT APPLICABLE	34566-9973	0	B	ST GRY	68 67 64 63 58 46 45 43 38 73 32 30 29 28 27 22 17 15 13 10
SALEABLE	NOT APPLICABLE	34566-2983	9	A	BLACK	70 69 63 62 61 58 57 56 55 54 53 52 51 49 44 43 42 41 37 36 34 73 32 29 28 27 26 19 18 17 16 15 13 12 11 10 3 2 1
SALEABLE	NOT APPLICABLE	34566-2993	9	B	ST GRY	72 71 70 68 67 66 62 61 60 59 58 57 56 55 54 53 52 51 50 48 47 46 42 41 40 39 38 37 36 35 34 33 73 32 31 30 29 28 27 26 25 24 16 15 14 13 10 9 8
SALEABLE	NOT APPLICABLE	34566-3013	9	C	BLUE	72 71 70 69 68 67 66 63 62 59 57 56 55 53 52 51 46 44 42 40 39 38 34 33 73 32 30 26 25 22 21 19 18 15 14 10 9 6 5 4 3
SALEABLE	NOT APPLICABLE	34566-3023	0	G	BLUE	79 76 71 68 66 61 59 56 53 48 46 44 43 42 41 39 36 35 34 30 29 28 23 22 21 19 16 15 14 13 12 11 7 4
SALEABLE	NOT APPLICABLE	34566-3033	0	H	ST GRY	80 78 77 76 75 70 66 65 63 60 58 57 56 55 51 50 46 45 44 43 40 39 37 36 35 34 32 31 30 28 26 24 23 22 20 19 18 17 16 13 12 6 5 4 3 2 1
SALEABLE	NOT APPLICABLE	34566-3043	0	C	BLUE	72 70 68 66 63 62 59 57 53 52 51 48 47 46 44 42 40 39 34 33 73 32 30 27 26 25 22 21 20 15 14 13 10 9 6 5 4
SALEABLE	NOT APPLICABLE	34566-3053	0	C	BLUE	72 70 68 66 63 62 59 57 53 52 51 48 47 46 44 42 40 39 38 34 33 73 32 30 27 26 25 22 21 20 15 14 13 10 9 6 5 4

MX123 52/66/73/80-WAY RECEPTACLE ASSY SEALED PIN OUT SHEET

STATUS	GM PART #	HRNS CONN ASSY			TPA	GROMMET CAP
		MATERIAL/PART NUMBER	WIRE DRESS OPTION	KEY OPTION Fp	COLOR OPTION Fp	NUMBERS INDICATE CAVITIES OPEN FOR CIRCUITS Fp
SALEABLE	NOT APPLICABLE	34566-3063	0	A	BLACK	71 69 65 64 63 60 58 57 56 55 54 53 52 51 49 45 44 43 42 41 37 36 35 34 33 73 32 30 28 26 19 18 16 12 10 3
SALEABLE	NOT APPLICABLE	34566-3073	0	A	BLACK	71 69 65 64 63 60 57 56 55 54 53 52 51 49 45 44 43 42 41 37 36 35 34 33 73 32 30 28 26 23 19 18 16 12 10 8 7 6 3
SALEABLE	NOT APPLICABLE	34566-3083	0	A	BLACK	71 69 65 64 63 60 58 57 56 55 54 53 52 51 49 45 44 43 42 41 37 36 35 34 33 73 32 30 28 26 19 18 16 11 10 3
SALEABLE	NOT APPLICABLE	34566-3093	0	A	BLACK	71 69 64 63 62 60 57 56 55 54 53 52 51 49 45 44 43 42 41 37 36 35 34 33 73 32 30 28 26 23 19 18 16 12 10 3
SALEABLE	NOT APPLICABLE	34566-3113	0	A	BLACK	71 69 65 64 63 60 57 56 55 54 53 52 51 49 45 44 43 42 41 37 36 35 34 33 73 32 30 28 26 23 21 19 18 16 12 10 8 5 3
SALEABLE	NOT APPLICABLE	34566-3123	0	B	ST GRY	72 70 68 66 60 59 55 54 53 52 50 48 46 40 39 35 34 33 73 32 31 30 29 28 27 26 25 24 16 10 9 8
SALEABLE	NOT APPLICABLE	34566-3133	0	C	BLUE	72 70 68 67 66 63 62 59 57 53 52 51 48 47 46 44 42 40 39 34 33 73 32 30 26 25 22 21 20 15 14 10 9 6 5 4
SALEABLE	NOT APPLICABLE	34566-3143	0	C	BLUE	72 70 66 63 62 59 57 53 52 51 46 44 42 40 39 37 36 34 33 73 32 30 26 25 22 21 15 14 10 9 6
SALEABLE	NOT APPLICABLE	34566-3153	0	A	BLACK	70 69 63 58 56 54 52 51 49 47 44 43 42 41 36 34 73 32 28 26 19 18 16 12 10 3
SALEABLE	NOT APPLICABLE	34566-3163	0	C	BLUE	72 70 66 63 62 59 57 56 55 53 52 51 46 44 42 40 39 37 36 34 33 73 32 30 26 25 22 21 19 18 15 14 10 9 6 3
SALEABLE	NOT APPLICABLE	34566-3173	0	A	BLACK	70 69 63 58 56 54 52 51 49 47 44 43 42 41 36 34 73 32 28 26 19 18 17 16 12 10 3 2 1
SALEABLE	NOT APPLICABLE	34566-3183	0	C	BLUE	72 70 66 63 62 59 57 56 55 53 52 51 46 44 42 40 39 34 33 73 30 26 25 22 21 15 14 10 9 6
SALEABLE	NOT APPLICABLE	34566-3193	0	A	BLACK	69 63 58 56 55 54 53 52 51 49 44 43 42 41 36 35 34 33 73 32 28 26 19 18 17 16 12 10 3 2 1
SALEABLE	NOT APPLICABLE	34566-3213	0	C	BLUE	72 70 67 66 63 62 59 56 53 52 51 46 44 42 40 34 33 73 32 30 26 25 22 21 15 14 10 9 6 5 4
SALEABLE	NOT APPLICABLE	34566-3223	0	C	BLUE	72 70 67 66 63 62 59 57 53 52 51 46 44 42 40 39 34 33 73 32 30 27 26 25 22 21 15 14 10 9 6 5 4

MX123 52/66/73/80-WAY RECEPTACLE ASSY SEALED PIN OUT SHEET

STATUS	GM PART #	HRNS CONN ASSY			TPA	GROMMET CAP																		
		MATERIAL/PART NUMBER	WIRE DRESS OPTION	KEY OPTION Fp	COLOR OPTION Fp	NUMBERS INDICATE CAVITIES OPEN FOR CIRCUITS Fp																		
SALEABLE	NOT APPLICABLE	34566-3233	0	A	BLACK			70	69						63	62	61			58	57	56	55	54	53
						52	51		49					44	43	42	41				37	36		34	
						73				32			29	28	27	26							19	18	
										16	15		13	12	11	10							3		
SALEABLE	NOT APPLICABLE	34566-3243	0	C	BLUE	72		70				66			63	62			59		57				53
						52	51					46		44		42		40	39					34	33
						73				32		30				26	25			22	21				
											15	14				10	9			6	5	4			
SALEABLE	NOT APPLICABLE	34566-3253	0	A	BLACK			70	69						63					58		56	55	54	53
						52	51		49					44	43	42	41					36		34	
						73				32				28		26							19	18	
										16	15			12		10							3		
SALEABLE	NOT APPLICABLE	34566-3263	0	C	BLUE	72		70				66			63	62			59		57	56	55		53
						52	51					46		44		42		40	39					34	33
						73				32		30				26	25			22	21		19	18	
											15	14				10	9			6	5	4	3		
SALEABLE	NOT APPLICABLE	34566-3273	0	A	BLACK			70	69						63					58		56	55	54	53
						52	51		49					44	43	42	41					36		34	
						73				32				28		26							19	18	17
										16	15			12		10							3	2	1
SALEABLE	NOT APPLICABLE	34566-3283	0	C	BLUE	72		70			67	66			63	62			59		57				53
						52	51					46		44		42		40	39					34	33
						73						30				26	25			22	21				
											15	14				10	9			6	5	4			
SALEABLE	NOT APPLICABLE	34566-3293	0	B	ST GRY	72	71	70		68	67	66				62	61	60	59	58	57	56	55	54	53
						52	51	50		48	47					42	41	40	39	38	37	36	35	34	33
						73				32	31	30	29	28	27	26	25	24	23						
										16	15	14	13			10	9	8							
SALEABLE	NOT APPLICABLE	34566-3313	0	C	BLUE	72		70							63	62			59		57				53
						52	51					46		44		42		40	39					34	33
						73				32		30				26	25			22	21				
											15	14								6	5	4			
SALEABLE	NOT APPLICABLE	34566-3323	0	B	ST GRY					68	67	66	65	64	63					58			55		
									49	48		46	45	44	43					38					
						73				32		30	29	28	27					22					17
										16						10									
SALEABLE	NOT APPLICABLE	34566-3333	0	A	BLACK	72	71	70	69	68			65	64	63		61		59	58	57	56		54	
						52	51	50	49		47					42	41			38	37	36		34	33
						73				32	31	30	29	28	27	26		24	23			20	19	18	17
										16			13	12	11	10	9						3	2	1
SALEABLE	NOT APPLICABLE	34566-3343	0	A	BLACK	72			69		67	66	65		63			60			57	56			53
									49		47			44	43	42		40			37	36	35		33
						73					31	30	29	28		26		24			21	20			17
										16	15	14	13		11	10					5	4	3	2	1
SALEABLE	NOT APPLICABLE	34566-3353	0	B	ST GRY					68	67			64					59	58				54	
												46	45						39	38					
						73				32		30	29	28	27				23	22					17
														12		10		8							1
SALEABLE	NOT APPLICABLE	34566-3363	0	A	BLACK		71		69	68			65	64	63		61		59		57	56		54	
						52		50	49		47					42	41	40	39	38	37	36		34	33
						73				32	31	30	29	28	27	26		24	23	22		20	19	18	
										16			13	12	11	10	9								1
SALEABLE	NOT APPLICABLE	34566-3373	9	C	BLUE	72		70		68	67	66			63	62			59		57	56	55		53
						52	51			48	47	46		44		42		40	39	38				34	33
						73				32		30				26	25			22	21		19	18	
											15	14				10	9			6	5	4	3		
SALEABLE	NOT APPLICABLE	34566-3383	0	A	BLACK			70	69	68			65	64	63		61		59	58	57	56		54	
						52		50	49	48	47					42	41			38	37	36		34	33
						73				32	31	30	29	28	27	26		24	23			20	19	18	
										16			13	12	11	10	9								1

MX123 52/66/73/80-WAY RECEPTACLE ASSY SEALED PIN OUT SHEET

STATUS	GM PART #	HRNS CONN ASSY			TPA	GROMMET CAP
		MATERIAL/PART NUMBER	WIRE DRESS OPTION	KEY OPTION Fp	COLOR OPTION Fp	NUMBERS INDICATE CAVITIES OPEN FOR CIRCUITS Fp
SALEABLE	NOT APPLICABLE	34566-3393	0	C	BLUE	72 70 68 67 66 63 62 59 57 53 52 51 48 47 46 44 42 40 39 34 33 73 32 30 26 25 22 21 15 14 10 9 6 5 4
SALEABLE	NOT APPLICABLE	34566-3413	0	A	BLACK	72 70 67 66 65 61 58 57 55 54 50 49 47 45 44 43 42 41 39 37 35 73 32 30 27 26 25 24 21 20 19 18 17 16 15 13 11 10 9 8 6 5 3 2 1
SALEABLE	NOT APPLICABLE	34566-3423	9	C	BLUE	69 63 58 56 55 54 53 52 51 49 44 43 42 41 36 35 34 33 73 32 28 26 19 18 17 16 12 10 3 2 1
SALEABLE	NOT APPLICABLE	34566-3433	9	C	BLUE	72 70 66 63 62 59 57 56 55 53 52 51 46 44 42 40 39 34 33 73 30 26 25 22 21 15 14 10 9 6
SALEABLE	NOT APPLICABLE	34566-3443	0	A	BLACK	71 69 65 64 63 60 57 56 55 54 53 52 51 49 45 44 43 42 41 37 36 35 34 33 73 32 30 28 26 23 19 18 16 12 10 3
SALEABLE	NOT APPLICABLE	34566-3453	0	A	BLACK	61 73 20 5 1
SALEABLE	NOT APPLICABLE	34566-3463	9	H	ST GRY	61 20 9 5 1
SALEABLE	NOT APPLICABLE	34566-3473	9	B	ST GRY	72 71 70 69 68 67 66 65 64 62 61 60 59 58 57 56 55 54 52 51 50 49 46 44 40 38 37 36 73 32 31 30 29 28 27 25 24 21 20 18 17 16 15 14 13 12 10 9 7 6 5 4 3 2
SALEABLE	NOT APPLICABLE	34566-3483	0	B	ST GRY	72 71 70 69 68 67 66 65 61 60 57 56 55 54 52 51 50 49 48 46 44 40 38 37 36 73 32 31 30 29 28 27 24 21 20 19 18 17 16 15 14 13 12 11 10 9 7 6 5 4 2
SALEABLE	NOT APPLICABLE	34566-3493	0	A	BLACK	72 70 61 58 57 55 54 49 47 45 44 43 42 41 39 37 35 73 32 30 27 26 25 24 21 20 19 18 17 16 15 13 11 10 9 8 6 5 4 3 2
SALEABLE	NOT APPLICABLE	34566-3513	0	A	BLACK	70 69 63 62 61 60 58 57 56 55 54 53 52 51 49 44 43 42 41 37 36 34 73 32 29 28 27 26 19 18 16 15 13 12 11 10 3
SALEABLE	NOT APPLICABLE	34566-3523	0	A	BLACK	72 70 66 63 62 56 55 54 52 49 43 42 36 35 34 73 31 28 26 21 20 19 18 16 15 12 10 9 5 2 1
SALEABLE	NOT APPLICABLE	34566-3533	9	A	BLACK	69 63 58 56 55 54 53 52 51 49 44 43 42 41 36 35 34 33 73 32 28 26 19 18 17 16 12 10 3 2 1
SALEABLE	NOT APPLICABLE	34566-3543	9	A	BLACK	72 70 66 63 62 59 57 56 55 53 52 51 46 44 42 40 39 34 33 73 30 26 25 22 21 15 14 10 9 6
SALEABLE	NOT APPLICABLE	34566-3553	9	C	BLUE	72 71 70 69 68 67 66 65 63 62 61 59 58 57 56 55 54 53 51 50 49 48 46 45 44 43 42 41 40 39 38 36 35 34 33 73 31 30 29 28 27 26 25 22 20 19 18 17 16 15 14 11 10 9 7 6 5 3 2 1

molex

MX123 52/66/73/80-WAY RECEPTACLE ASSY SEALED PIN OUT SHEET

STATUS	GM PART #	HRNS CONN ASSY			TPA	GROMMET CAP
		MATERIAL/PART NUMBER	WIRE DRESS OPTION	KEY OPTION Fp	COLOR OPTION Fp	NUMBERS INDICATE CAVITIES OPEN FOR CIRCUITS Fp
SALEABLE	NOT APPLICABLE	34566-3563	9	C	BLUE	72 70 68 67 66 63 62 59 57 53 52 51 48 47 46 44 42 40 39 38 34 33 73 32 30 27 26 25 22 21 15 14 10 9 6 5 4
SALEABLE	NOT APPLICABLE	34566-3573	9	C	BLUE	70 69 68 63 62 61 58 57 56 55 54 53 52 51 50 49 48 47 44 43 42 41 37 36 34 73 32 29 28 27 26 19 18 16 15 14 13 12 11 10 3
SALEABLE	NOT APPLICABLE	34566-3583	9	A	BLACK	70 69 63 62 61 58 57 56 55 54 53 52 51 50 49 44 43 42 41 37 36 34 73 32 29 28 27 26 19 18 16 15 14 13 12 11 10 3
SALEABLE	NOT APPLICABLE	34566-3593	0	A	BLACK	71 69 64 63 60 58 57 56 55 54 53 52 51 49 45 44 43 42 41 37 36 35 34 33 73 32 30 28 26 19 18 16 15 12 10 3
SALEABLE	NOT APPLICABLE	34566-3613	0	B	ST GRY	68 67 64 63 59 46 45 43 39 73 32 30 29 28 27 10 6 5 4 3
SALEABLE	NOT APPLICABLE	34566-3623	0	A	BLACK	72 70 69 63 62 61 60 59 58 57 56 55 54 53 52 51 49 44 43 42 41 37 36 34 73 32 29 28 27 26 19 18 16 15 13 12 11 10 8 3
SALEABLE	NOT APPLICABLE	34566-3633	0	C	BLUE	72 70 68 67 66 63 62 59 57 53 52 51 48 47 46 44 40 39 38 37 36 34 33 73 32 30 26 25 24 23 22 21 15 14 10 9 8 7 6 5 4 2
SALEABLE	NOT APPLICABLE	34566-3643	0	B	ST GRY	72 71 70 68 67 66 64 63 59 53 52 51 50 48 47 46 39 34 33 73 32 31 30 29 28 27 26 25 24 17 16 15 14 13 10 8 2 1
SALEABLE	NOT APPLICABLE	34566-3653	0	B	ST GRY	72 71 70 69 68 66 65 64 63 59 53 52 51 50 49 48 47 46 45 44 43 39 34 33 73 32 30 29 28 27 26 25 24 17 16 14 13 12 11 10 8 3 2 1
SALEABLE	NOT APPLICABLE	34566-3663	0	A	BLACK	72 70 69 63 62 61 60 59 58 57 56 55 54 53 52 51 49 44 43 42 41 37 36 34 73 32 29 28 27 26 19 18 16 15 13 12 11 10 7 6 3
SALEABLE	NOT APPLICABLE	34566-3673	9	C	BLUE	71 70 69 68 67 63 62 61 59 58 57 56 55 54 53 51 50 49 48 45 44 43 42 41 40 39 38 36 35 34 33 73 31 30 29 28 27 26 22 20 19 18 17 16 15 14 9 7 6 5 3 2 1
SALEABLE	NOT APPLICABLE	34566-3683	9	H	ST GRY	61 32 20 15 9 5 1
SALEABLE	NOT APPLICABLE	34566-3693	0	C	BLUE	72 70 68 67 66 63 62 59 57 53 52 51 48 47 46 44 42 40 39 38 34 33 73 32 30 27 26 25 22 21 15 14 10 9 6 5 4
SALEABLE	NOT APPLICABLE	34566-3713	0	C	BLUE	72 70 68 67 66 63 62 59 57 53 52 51 48 47 46 44 42 40 39 34 33 73 32 30 27 26 25 22 21 15 14 10 9 6 5 4
SALEABLE	NOT APPLICABLE	34566-3723	0	A	BLACK	70 69 63 62 61 58 57 56 55 54 53 52 51 50 49 44 43 42 41 37 36 34 73 32 29 28 27 26 19 18 16 15 14 13 12 11 10 3

MX123 52/66/73/80-WAY RECEPTACLE ASSY SEALED PIN OUT SHEET

STATUS	GM PART #	HRNS CONN ASSY			TPA	GROMMET CAP
		MATERIAL/PART NUMBER	WIRE DRESS OPTION	KEY OPTION Fp	COLOR OPTION Fp	NUMBERS INDICATE CAVITIES OPEN FOR CIRCUITS Fp
SALEABLE	NOT APPLICABLE	34566-3733	0	B	ST GRY	72 71 70 68 67 66 62 61 60 59 58 57 56 55 54 53 52 51 50 48 47 46 42 41 40 39 38 37 36 35 34 33 73 32 31 30 29 28 27 26 25 24 23 16 15 14 13 10 9 8
SALEABLE	NOT APPLICABLE	34566-3743	0	C	BLUE	72 70 68 66 63 62 59 57 53 52 51 48 47 46 44 42 40 39 38 34 33 73 32 30 27 26 25 22 21 15 14 10 9 6 5 4
SALEABLE	NOT APPLICABLE	34566-3753	0	C	BLUE	72 70 68 66 63 62 59 57 53 52 51 48 47 46 44 42 40 39 34 33 73 32 30 27 26 25 22 21 15 14 10 9 6 5 4
SALEABLE	NOT APPLICABLE	34566-3763	0	C	BLUE	72 70 68 66 63 62 59 57 56 55 53 52 51 48 47 46 44 42 40 39 34 33 73 32 30 27 26 25 22 21 15 14 10 9 6 5 4
SALEABLE	NOT APPLICABLE	34566-3773	0	A	BLACK	70 69 63 58 56 55 54 53 52 51 50 49 44 43 42 41 39 36 34 73 32 28 26 19 18 16 15 14 12 10 3
SALEABLE	NOT APPLICABLE	34566-3783	0	A	BLACK	70 69 63 58 56 55 54 53 52 51 50 49 44 43 42 41 39 36 34 73 32 28 26 19 18 17 16 15 14 12 10 3 2 1
SALEABLE	NOT APPLICABLE	34566-3793	0	A	BLACK	71 70 64 63 60 58 57 56 55 54 53 52 51 49 45 44 43 42 41 37 36 34 73 32 30 28 26 23 21 19 18 16 15 12 10 8 5 3
SALEABLE	NOT APPLICABLE	34566-3813	0	C	BLUE	72 70 68 66 63 62 59 57 53 52 51 48 47 46 44 42 40 39 38 37 36 34 33 73 32 30 26 25 24 22 21 20 15 14 13 10 9 8 6 5 4 2
SALEABLE	NOT APPLICABLE	34566-3823	0	A	BLACK	70 69 63 61 58 57 56 55 54 53 52 51 49 44 43 41 37 36 34 73 32 27 26 19 18 16 15 11 10 3
SALEABLE	NOT APPLICABLE	34566-3833	0	A	BLACK	70 69 63 62 61 57 56 55 54 53 52 51 49 44 43 42 41 37 36 34 73 32 29 28 27 26 23 19 18 16 15 13 12 11 10 8 3
SALEABLE	NOT APPLICABLE	34566-3843	0	A	BLACK	72 71 70 69 68 67 66 64 63 62 60 59 55 54 53 52 49 48 44 43 42 41 40 39 35 34 33 73 32 29 28 27 25 24 23 19 18 17 16 13 12 11 9 8 7 6 5 4 3 2 1
SALEABLE	NOT APPLICABLE	34566-3853	0	A	BLACK	72 71 70 69 68 67 66 65 64 63 62 60 59 55 54 53 52 49 48 45 44 43 42 41 40 39 35 34 33 73 32 29 28 27 25 24 23 19 18 17 16 13 12 11 9 8 7 6 5 4 3 2 1
SALEABLE	NOT APPLICABLE	34566-3863	0	B	ST GRY	72 71 70 68 67 66 62 61 60 59 58 57 56 55 54 53 52 51 50 48 47 46 42 41 40 39 38 37 36 35 34 33 73 32 31 30 29 28 27 26 25 24 17 16 15 14 13 10 8 2 1
SALEABLE	NOT APPLICABLE	34566-3873	0	B	ST GRY	63 59 58 57 56 55 50 49 48 46 45 43 39 38 37 36 35 34 73 29 27 23 22 21 18 16 15 14 13 7 6 5 4 3
SALEABLE	NOT APPLICABLE	34566-3883	0	B	ST GRY	67 66 59 58 57 56 55 53 50 49 48 45 39 38 37 36 35 34 33 73 29 23 22 21 18 16 15 14 13 8 7 6 5 4 3

MX123 52/66/73/80-WAY RECEPTACLE ASSY SEALED PIN OUT SHEET

STATUS	GM PART #	HRNS CONN ASSY			TPA	GROMMET CAP
		MATERIAL/PART NUMBER	WIRE DRESS OPTION	KEY OPTION Fp	COLOR OPTION Fp	NUMBERS INDICATE CAVITIES OPEN FOR CIRCUITS Fp
SALEABLE	NOT APPLICABLE	34566-3893	0	C	BLUE	72 70 68 67 66 63 62 59 57 53 52 51 48 47 46 44 42 34 33 73 32 30 27 26 25 22 21 15 14 10 9 6 5 4
SALEABLE	NOT APPLICABLE	34566-3913	0	A	BLACK	71 70 69 64 63 60 58 57 56 55 54 53 52 51 49 45 44 43 42 41 37 36 34 73 32 30 28 26 23 21 19 18 16 15 12 10 8 5 3
SALEABLE	NOT APPLICABLE	34566-3923	0	B	ST GRY	72 70 68 66 60 59 55 54 53 52 50 48 46 40 39 35 34 33 73 32 31 30 29 28 27 26 25 24 23 19 18 16 10 9 8 7
SALEABLE	NOT APPLICABLE	34566-3933	0	A	BLACK	71 70 69 64 63 60 58 57 56 55 54 53 52 51 49 45 44 43 42 41 37 36 34 73 32 30 28 26 19 18 16 15 12 10 3
SALEABLE	NOT APPLICABLE	34566-3943	0	C	BLUE	72 70 68 66 60 59 55 54 53 52 50 48 46 40 39 35 34 33 73 32 31 30 29 28 27 26 25 24 16 10 9 8
SALEABLE	NOT APPLICABLE	34566-3953	0	C	BLUE	72 70 68 63 62 59 57 53 52 51 48 47 46 44 42 40 39 34 33 73 32 30 26 25 23 22 21 20 15 14 13 7 6 5 4
SALEABLE	NOT APPLICABLE	34566-3963	0	C	BLUE	72 70 68 67 66 63 62 59 57 53 52 51 48 47 46 44 42 40 39 38 34 33 73 32 30 26 25 22 21 15 14 10 9 6 5 4
SALEABLE	NOT APPLICABLE	34566-3973	0	C	BLUE	72 70 68 67 63 62 59 57 53 52 51 48 47 46 44 42 40 39 38 34 33 73 32 30 26 25 22 21 15 14 6 5 4
SALEABLE	NOT APPLICABLE	34566-3983	0	A	BLACK	72 71 70 69 64 63 60 59 58 57 56 55 54 53 52 51 49 45 44 43 42 41 40 37 36 34 73 32 30 28 26 19 18 16 15 12 10 3
SALEABLE	NOT APPLICABLE	34566-3993	0	A	BLACK	70 69 63 62 61 60 58 57 56 55 54 53 52 51 49 44 43 42 41 40 37 36 34 73 32 29 28 27 26 19 18 16 15 13 12 11 10 3
SALEABLE	NOT APPLICABLE	34566-4013	0	B	ST GRY	72 70 68 66 60 59 55 54 53 52 50 48 46 40 39 35 34 33 73 32 31 30 29 28 27 26 25 24 17 16 10 8 2 1
SALEABLE	NOT APPLICABLE	34566-4023	0	B	ST GRY	72 71 70 68 67 66 62 61 60 59 58 57 56 55 54 53 52 51 50 48 47 46 42 41 40 39 38 37 36 35 34 33 73 32 31 30 29 28 27 26 25 24 16 15 14 13 10 9 8
SALEABLE	NOT APPLICABLE	34566-4033	0	C	BLUE	72 70 68 63 62 59 58 57 53 52 51 48 47 44 42 40 39 38 34 33 73 32 30 26 25 22 21 20 17 15 14 13 6 5 4 1
SALEABLE	NOT APPLICABLE	34566-4043	0	A	BLACK	71 70 69 67 64 63 60 57 56 55 54 53 52 51 49 45 44 43 42 41 37 36 34 73 32 30 28 26 23 19 18 16 15 12 10 3
SALEABLE	NOT APPLICABLE	34566-4053	0	A	BLACK	72 69 67 66 65 63 60 57 56 53 49 47 46 44 43 42 40 37 36 35 33 73 31 30 29 28 27 26 24 21 20 17 16 15 14 13 11 10 5 4 3 2 1

MX123 52/66/73/80-WAY RECEPTACLE ASSY SEALED PIN OUT SHEET

STATUS	GM PART #	HRNS CONN ASSY			TPA	GROMMET CAP
		MATERIAL/PART NUMBER	WIRE DRESS OPTION	KEY OPTION Fp	COLOR OPTION Fp	NUMBERS INDICATE CAVITIES OPEN FOR CIRCUITS Fp
SALEABLE	NOT APPLICABLE	34566-4063	0	B	ST GRY	73: 68 67 64 59 58 54 / 46 45 39 38 / 32 30 29 28 27 23 22 17 / 15 13 10 8 1
SALEABLE	NOT APPLICABLE	34566-4073	0	A	BLACK	73: 72 70 66 63 62 59 57 56 55 53 / 52 51 46 44 42 40 39 37 36 34 33 / 32 30 26 25 22 21 19 18 / 15 14 10 9 6 3
SALEABLE	NOT APPLICABLE	34566-4083	0	C	BLUE	73: 72 70 68 63 62 59 58 57 53 / 52 51 48 47 44 42 40 39 38 37 36 34 33 / 32 30 27 26 25 24 22 21 20 17 / 15 14 13 8 6 5 4 2 1
SALEABLE	NOT APPLICABLE	34566-4093	0	A	BLACK	73: 71 70 69 67 64 63 60 57 56 55 54 53 / 52 51 49 47 45 44 43 42 41 37 36 34 / 32 30 28 26 23 19 18 / 16 15 12 10 3
SALEABLE	NOT APPLICABLE	34566-4113	0	B	ST GRY	73: 68 67 64 58 / 46 45 38 / 32 30 29 28 27 22 17 / 15 13 10 1
SALEABLE	NOT APPLICABLE	34566-4123	9	A	BLACK	73: 72 69 67 66 65 63 60 57 56 53 / 49 47 46 44 43 42 40 37 36 35 33 / 31 30 29 28 26 24 21 20 17 / 16 15 14 13 11 10 5 4 3 2 1
SALEABLE	NOT APPLICABLE	34566-4133	9	B	ST GRY	73: 68 67 64 59 58 54 / 46 45 39 38 / 32 30 29 28 27 23 22 17 / 15 13 10 9 8 1
SALEABLE	NOT APPLICABLE	34566-4143	0	B	ST GRY	73: 68 67 64 59 58 54 / 46 45 39 38 / 32 30 29 28 27 23 22 17 / 10 9 1
SALEABLE	NOT APPLICABLE	34566-4153	0	B	ST GRY	73: 72 70 68 66 60 59 55 54 53 / 52 50 48 46 44 40 39 35 34 33 / 32 31 30 29 28 27 26 25 24 23 19 18 / 16 10 9 8 7
SALEABLE	NOT APPLICABLE	34566-4163	0	B	ST GRY	73: 72 70 68 66 60 59 55 54 53 / 52 50 48 46 40 39 35 34 33 / 32 31 30 29 28 27 26 25 24 17 / 16 10 8 7 2 1
SALEABLE	NOT APPLICABLE	34566-4173	0	A	BLACK	73: 72 71 70 69 68 64 63 60 59 58 56 55 54 53 / 52 51 49 47 45 44 43 42 41 38 36 34 / 32 30 28 26 25 21 19 18 / 16 15 12 10 9 8 5 3
SALEABLE	NOT APPLICABLE	34566-4183	0	C	BLUE	73: 72 70 68 66 63 62 59 58 57 53 / 52 51 48 47 46 44 42 40 39 34 33 / 32 30 26 25 23 22 21 20 17 / 15 14 13 10 9 7 6 5 4 1
SALEABLE	NOT APPLICABLE	34566-4193	0	C	BLUE	73: 71 69 65 64 61 60 58 56 55 54 / 50 49 45 43 41 38 37 36 35 / 31 29 28 24 23 20 19 18 17 / 16 13 12 11 8 7 3 2 1
SALEABLE	NOT APPLICABLE	34566-4213	0	A	BLACK	73: 72 71 68 67 66 65 64 60 59 58 / 50 48 47 46 45 40 39 38 35 / 31 30 25 24 22 21 20 17 / 14 9 7 6 5 4 2 1
SALEABLE	NOT APPLICABLE	34566-4223	0	A	BLACK	73: 72 71 68 67 66 65 64 60 59 / 50 48 47 46 45 40 39 38 35 33 / 31 30 25 24 23 22 21 20 17 / 14 9 8 7 6 5 4 2 1

molex

MX123 52/66/73/80-WAY RECEPTACLE ASSY SEALED PIN OUT SHEET

STATUS	GM PART #	HRNS CONN ASSY			TPA	GROMMET CAP																
		MATERIAL/PART NUMBER	WIRE DRESS OPTION	KEY OPTION Fp	COLOR OPTION Fp	NUMBERS INDICATE CAVITIES OPEN FOR CIRCUITS Fp																
SALEABLE	NOT APPLICABLE	34566-4233	0	B	ST GRY				69				65	64	63							
									49				45	44	43							
						73													23	22	21	20	19	18	
														12	11		9		7	6	5	4	3		
SALEABLE	NOT APPLICABLE	34566-4243	0	A	BLACK												61			58	57	56			
							51	50			47	46								38	37	36			
						73					31	30				26				22	21	20			
											15	14				10									
SALEABLE	NOT APPLICABLE	34566-4253	0	A	BLACK								65				61			58	57	56			
							51	50			47	46	45							38	37	36			
						73					31	30				26				22	21	20			
											15	14				10									
SALEABLE	NOT APPLICABLE	34566-4263	0	B	ST GRY	72	71	70	69	68			65	64		62	61	60						54	
						52	51				47	46		44		42	41	40							
						73				32	31	30		28		26	25	24				20	19		17
														12	11	10	9						2	1
SALEABLE	NOT APPLICABLE	34566-4273	0	B	ST GRY	72	71	70	69	68	67	66	65	64		62	61	60						54	
						52	51				47		45	44		42	41	40							
						73				32	31	30		28		26	25	24				20	19		17
													13	12	11	10	9	8					2	1
SALEABLE	NOT APPLICABLE	34566-4283	0	A	BLACK			70	69						63	62	61	60			57	56	55	54	53
						52	51		49					44	43	42	41				37	36		34	
						73				32			29	28	27	26			23				19	18	
										16	15		13	12	11	10		8				3		
SALEABLE	NOT APPLICABLE	34566-4293	0	B	ST GRY						67	66			63				59	58	57	56	55		53
								50	49	48			45		43				39	38	37	36	35	34	33
						73							29		27				23	22	21			18	
										16	15	14	13					8	7	6	5	4	3		
SALEABLE	NOT APPLICABLE	34566-4313	0	B	ST GRY										63				59	58	57	56	55		53
								50	49	48		46			43				39	38	37	36	35	34	33
						73							29		27				23	22	21			18	
										16	15	14	13						7	6	5	4	3		
SALEABLE	NOT APPLICABLE	34566-4323	0	B	ST GRY	72		70		68		66						60	59				55	54	53
						52		50		48		46						40	39				35	34	33
						73				32	31	30	29	28	27	26	25	24					19	18	17
										16						10		8	7					2	1
SALEABLE	NOT APPLICABLE	34566-4333	0	A	BLACK	72	71	70	69		67			64	63			60	59			56	55	54	53
						52	51		49		47		45	44	43	42	41			38		36		34	
						73				32		30		28		26	25		23				19	18	
										16	15			12		10	9						3		
SALEABLE	NOT APPLICABLE	34566-4343	0	A	BLACK	72	71	70	69					64	63			60	59	58		56	55	54	53
						52	51		49		47		45	44	43	42	41			38		36		34	
						73				32		30		28		26	25						19	18	
										16	15			12		10	9						3		
SALEABLE	NOT APPLICABLE	34566-4353	0	C	BLUE	72		70		68					63	62			59	58	57				53
						52	51			48	47			44		42		40	39					34	33
						73				32		30				26	25		23	22	21	20			17
											15	14	13						7	6	5	4			1
SALEABLE	NOT APPLICABLE	34566-4363	0	A	BLACK			70	69						63	62	61	60		58	57	56	55	54	53
						52	51		49					44	43	42	41				37	36		34	
						73				32			29	28	27	26			23				19	18	
										16	15		13	12	11	10		8				3		
SALEABLE	NOT APPLICABLE	34566-4373	0	A	BLACK			70	69						63					58		56		54	
						52	51		49		47			44	43	42	41	40				36		34	
						73				32				28		26							19	18	17
										16				12		10							3	2	1
SALEABLE	NOT APPLICABLE	34566-4383	0	H	ST GRY		79					74	73	72	71		69	68	67			64		62	61
							59					54		52			49	48	47					42	41
								38					33				29		27		25				
								18			15	14			11	10	9	8	7						

MX123 52/66/73/80-WAY RECEPTACLE ASSY SEALED PIN OUT SHEET

STATUS	GM PART #	HRNS CONN ASSY			TPA	GROMMET CAP
		MATERIAL/PART NUMBER	WIRE DRESS OPTION	KEY OPTION Fp	COLOR OPTION Fp	NUMBERS INDICATE CAVITIES OPEN FOR CIRCUITS Fp
SALEABLE	NOT APPLICABLE	34566-4393	0	G	BLUE	78 77 75 74 72 70 69 67 65 64 63 62 60 58 57 55 54 52 51 50 49 47 45 40 38 37 33 32 31 27 26 25 24 20 18 17 10 9 8 6 5 3 2 1
SALEABLE	NOT APPLICABLE	34566-4413	0	B	ST GRY	63 59 58 57 56 55 53 50 49 48 46 43 39 38 37 36 35 34 33 73 29 27 23 22 21 18 16 15 14 7 6 5 4 3
SALEABLE	NOT APPLICABLE	34566-4423	9	C	BLUE	72 70 68 67 66 63 62 59 57 53 52 51 48 47 46 44 42 40 39 38 37 36 34 33 73 32 30 27 26 25 24 22 21 15 14 10 9 8 6 5 4 2
SALEABLE	NOT APPLICABLE	34566-4433	9	A	BLACK	70 69 63 62 61 60 58 57 56 55 54 53 52 51 50 49 44 43 42 41 40 37 36 34 73 32 29 28 27 26 19 18 16 15 14 13 12 11 10 3
SALEABLE	NOT APPLICABLE	34566-4443	9	A	BLACK	67 66 48 47 41 73 32 31 30 29 27 26 25 22 21 19 18 17 16 15 14 13 11 10 9 8 7 6 5 4 3 1
SALEABLE	NOT APPLICABLE	34566-4453	0	A	BLACK	72 71 70 69 68 65 64 63 62 61 60 59 58 57 56 55 54 53 52 51 50 49 48 46 45 44 43 42 40 39 38 37 36 35 34 33 73 28 24 23 20 12 11 2 1
SALEABLE	NOT APPLICABLE	34566-4463	9	B	ST GRY	63 53 48 47 45 43 42 39 35 34 33 73 26 23 22 19 11 1
SALEABLE	NOT APPLICABLE	34566-4473	0	B	ST GRY	64 63 62 59 58 53 47 45 43 42 39 35 34 33 73 26 25 23 22 3 1
SALEABLE	NOT APPLICABLE	34566-4483	9	C	BLUE	72 70 68 67 66 63 62 59 58 57 56 55 53 52 51 49 48 47 46 44 40 39 38 37 36 34 33 73 32 30 27 26 25 24 23 22 21 20 19 18 17 15 14 13 10 9 8 7 6 5 4 3 2 1
SALEABLE	NOT APPLICABLE	34566-4493	9	A	BLACK	72 71 70 69 67 64 63 62 61 60 59 58 57 56 55 54 53 52 51 50 49 48 47 45 44 43 42 41 40 39 37 36 34 73 32 30 29 28 27 26 24 23 21 19 18 17 16 15 14 13 12 11 10 8 5 3 2 1
SALEABLE	NOT APPLICABLE	34566-4513	9	B	ST GRY	72 71 70 68 67 66 63 62 61 60 59 58 57 56 55 54 53 52 51 50 48 47 46 42 41 40 39 38 37 36 35 34 33 73 32 31 30 29 28 27 26 25 24 23 19 18 17 16 15 14 13 10 8 7 3 2 1
SALEABLE	NOT APPLICABLE	34566-4523	0	G	BLUE	78 77 75 74 72 70 69 67 65 64 63 62 60 58 57 55 54 52 51 50 49 47 45 40 38 37 31 27 26 25 24 20 18 17 10 9 8 6 5 3 2 1
SALEABLE	NOT APPLICABLE	34566-4533	0	A	BLACK	72 69 67 65 63 60 57 56 53 49 47 44 43 40 37 36 35 33 73 31 30 29 28 24 21 20 17 16 15 14 13 11 10 5 4 3 2 1
SALEABLE	NOT APPLICABLE	34566-4543	0	B	ST GRY	68 67 64 63 58 57 55 53 46 45 43 38 37 35 73 32 30 29 28 27 22 21 19 17 12 10 1
SALEABLE	NOT APPLICABLE	34566-4553	0	B	ST GRY	68 67 64 63 58 57 53 46 45 43 38 37 73 32 30 29 28 27 22 21 17 12 10

MX123 52/66/73/80-WAY RECEPTACLE ASSY SEALED PIN OUT SHEET

STATUS	GM PART #	HRNS CONN ASSY			TPA	GROMMET CAP																	
		MATERIAL/PART NUMBER	WIRE DRESS OPTION	KEY OPTION Fp	COLOR OPTION Fp	NUMBERS INDICATE CAVITIES OPEN FOR CIRCUITS Fp																	
SALEABLE	NOT APPLICABLE	34566-4563	0	B	ST GRY					68	67			64	63					58			55		53
												46	45		43					38			35		
						73				32		30	29	28	27					22			19		17
														12		10									1
SALEABLE	NOT APPLICABLE	34566-4573	0	B	ST GRY					68	67			64	63					58					53
												46	45		43					38					
						73				32		30	29	28	27					22					17
														12		10									
SALEABLE	NOT APPLICABLE	34566-4583	0	B	ST GRY					68	67			64						58					53
												46	45							38					
						73				32		30	29	28	27					22					17
														12		10									1
SALEABLE	NOT APPLICABLE	34566-4593	0	B	ST GRY					68	67			64						58					53
												46	45							38					
						73				32		30	29	28	27					22					17
														12		10									
SALEABLE	NOT APPLICABLE	34566-4613	0	A	BLACK	72			69		67	66	65		63			60			57	56			53
									49		47			44	43	42		40			37	36	35		33
						73					31	30	29	28	27	26		24			21	20			17
										16	15	14	13		11	10					5	4	3	2	1
SALEABLE	NOT APPLICABLE	34566-4623	0	B	ST GRY	72		70		68		66						60	59				55	54	53
						52		50		48		46						40	39				35	34	33
						73				32	31	30	29	28	27	26	25	24	23						17
										16						10		8	7					2	1
SALEABLE	NOT APPLICABLE	34566-4633	0	A	BLACK		71	70	69					64	63			60	59	58		56	55	54	53
						52	51		49		47		45	44	43	42	41			38		36		34	
						73				32		30		28		26					21		19	18	
										16	15			12		10		8			5		3		
SALEABLE	NOT APPLICABLE	34566-4643	0	B	ST GRY	72		70		68		66						60	59				55	54	53
						52		50		48		46						40	39				35	34	33
						73				32	31	30	29	28	27	26	25	24	23				19	18	17
										16						10		8	7					2	1
SALEABLE	NOT APPLICABLE	34566-4653	0	A	BLACK		71	70	69		67			64	63			60	59			56	55	54	53
						52	51		49		47		45	44	43	42	41			38		36		34	
						73				32		30		28		26			23				19	18	
										16	15			12		10							3		
SALEABLE	NOT APPLICABLE	34566-4663	0	A	BLACK		71	70	69					64	63			60	59	58		56	55	54	53
						52	51		49		47		45	44	43	42	41			38		36		34	
						73				32		30		28		26							19	18	
										16	15			12		10							3		
SALEABLE	NOT APPLICABLE	34566-4673	0	A	BLACK						67	66													
											47						41								
						73				32	31	30	29		27	26	25			22	21		19	18	17
										16	15	14	13			10	9	8	7	6	5	4	3		
SALEABLE	NOT APPLICABLE	34566-4683	9	B	ST GRY	72	71	70	69	68	67	66	65	64		62	61	60	59	58	57	56	55	54	
						52	51	50	49			46		44			41	40		38	37	36			
						73				32	31	30	29	28	27		25	24			21	20		18	17
										16	15	14	13	12		10	9	8	7	6	5	4	3	2	
SALEABLE	NOT APPLICABLE	34566-4693	0	B	ST GRY	72	71	70	69	68	67	66	65				61	60			57	56	55	54	
						52	51	50	49	48		46		44			41	40		38	37	36			
						73				32	31	30	29	28	27			24			21	20	19	18	17
										16	15	14	13	12	11	10	9	8	7	6	5	4		2	
SALEABLE	NOT APPLICABLE	34566-4713	0	A	BLACK	72	71	70	69		67			64	63			60	59			56	55	54	53
						52	51		49		47		45	44	43	42	41					36		34	
						73				32		30		28		26			23				19	18	
										16	15			12		10							3		
SALEABLE	NOT APPLICABLE	34566-4723	0	A	BLACK	72	71	70	69					64	63			60	59	58		56	55	54	53
						52	51		49		47		45	44	43	42	41					36		34	
						73				32		30		28		26							19	18	
										16	15			12		10							3		

MX123 52/66/73/80-WAY RECEPTACLE ASSY SEALED PIN OUT SHEET

STATUS	GM PART #	HRNS CONN ASSY			TPA	GROMMET CAP
		MATERIAL/PART NUMBER	WIRE DRESS OPTION	KEY OPTION Fp	COLOR OPTION Fp	NUMBERS INDICATE CAVITIES OPEN FOR CIRCUITS Fp
SALEABLE	NOT APPLICABLE	34566-4733	0	A	BLACK	72 71 70 69 — — — — 64 63 — — 60 59 58 — 56 55 54 53 52 51 — 49 — 47 — 45 44 43 42 41 — — — — 36 — 34 — 73 — 32 — 30 — 28 — 26 — — — — 21 — 19 18 — — 16 15 — — 12 — 10 — 8 — — 5 — 3 — —
SALEABLE	NOT APPLICABLE	34566-4743	9	A	BLACK	72 71 70 69 — 67 — 65 64 63 62 61 60 59 58 57 56 55 54 53 52 51 50 49 48 47 — 45 44 43 42 41 40 39 — 37 36 — 34 — 73 — 32 — 30 29 28 27 26 — 24 23 — 21 — 19 18 17 — 16 15 14 13 12 11 10 — 8 — — 5 — 3 2 1
SALEABLE	NOT APPLICABLE	34566-4753	0	B	ST GRY	— — — — 68 67 — — 64 — — — — — 58 — — — — — — — — — — — 46 45 — — — — — — 38 — — — — — 73 — 32 — 30 29 28 27 — — — — — 22 — — — — 17 — — 15 — 13 — — 10 — — — — 6 — — — — 1
SALEABLE	NOT APPLICABLE	34566-4763	0	B	ST GRY	— — — — 68 67 — — 64 — — — — — — — — — — — — — — — — 46 45 — — — — — — — — — — — 73 — 32 — 30 29 28 27 — — — — — — — — — 17 — — 15 — 13 — — 10 — — — — 6 — — — — —
SALEABLE	NOT APPLICABLE	34566-4773	0	B	ST GRY	— — — — 68 67 — — 64 — — — 59 58 — — — 54 — — — — — — — 46 45 — — — — 39 38 — — — — — 73 — 32 — 30 29 28 27 — — — — 23 22 — — — — 17 — — 15 — 13 — — 10 — 8 — — 6 — — — — 1
SALEABLE	NOT APPLICABLE	34566-4783	0	B	ST GRY	— — — — 68 67 — — 64 63 — — — — 58 — — 55 — — — — — — — — 46 45 — 43 — — — — 38 — — 35 — — 73 — 32 — 30 29 28 27 — — — — — 22 — — — 19 — 17 — — 15 — 13 — — 10 — — — — 6 — — — — 1
SALEABLE	NOT APPLICABLE	34566-4793	0	B	ST GRY	— — — — 68 67 — — 64 63 — — — — 58 — — — — — — — — — — — 46 45 — 43 — — — — 38 — — — — — 73 — 32 — 30 29 28 27 — — — — — 22 — — — — 17 — — 15 — 13 — — 10 — — — — 6 — — — — —
SALEABLE	NOT APPLICABLE	34566-4813	9	B	ST GRY	— — — — 68 67 — — 64 — — — 59 58 — — — 54 — — — — — — — 46 45 — — — — 39 38 — — — — — 73 — 32 — 30 29 28 27 — — — — 23 22 — — — — 17 — — 15 — 13 — — — 10 9 8 — 6 — — — — 1
SALEABLE	NOT APPLICABLE	34566-4823	0	C	BLUE	— — — — 68 67 66 65 64 — — — 59 58 57 — 55 54 53 — 51 50 49 48 — 46 45 — 43 42 41 40 39 38 37 — 35 — 33 73 — 32 31 30 — — — 26 — 24 23 22 — 20 — — — — 16 — — 13 — — 10 9 8 7 6 5 4 3 2 —
SALEABLE	NOT APPLICABLE	34566-4833	0	C	BLUE	72 — 70 — 68 67 66 — — 63 62 — — 59 — 57 — — — 53 52 51 — — 48 47 46 — 44 — 42 — 40 39 — 37 36 — 34 33 73 — 32 — 30 — — 27 26 25 24 — 22 21 — — — — — — — 15 14 — — — 10 9 8 — 6 5 4 — 2 —
SALEABLE	NOT APPLICABLE	34566-4843	0	C	BLUE	72 — 70 — 68 67 66 — — 63 62 — — 59 — 57 — — — 53 52 51 — — 48 47 46 — 44 — 42 — 40 39 38 37 36 — 34 33 73 — 32 — 30 — — 27 26 25 24 — 22 21 — — — — — — — 15 14 — — — 10 9 8 — 6 5 4 — 2 —
SALEABLE	NOT APPLICABLE	34566-4853	0	C	BLUE	72 — 70 — 68 — 66 — — 63 62 — — 59 — 57 56 55 — 53 52 51 — — 48 47 46 — 44 — 42 — 40 39 — 37 36 — 34 33 73 — 32 — 30 — — 27 26 25 24 — 22 21 — 19 18 — — — — 15 14 — — — 10 9 8 — 6 5 4 3 2 —
SALEABLE	NOT APPLICABLE	34566-4863	0	C	BLUE	72 — 70 — 68 — 66 — — 63 62 — — 59 — 57 — — — 53 52 51 — — 48 47 46 — 44 — 42 — 40 39 38 37 36 — 34 33 73 — 32 — 30 — — 27 26 25 24 — 22 21 — — — — — — — 15 14 — — — 10 9 8 — 6 5 4 — 2 —
SALEABLE	NOT APPLICABLE	34566-4873	0	C	BLUE	72 — 70 — 68 — 66 — — 63 62 — — 59 — 57 — — — 53 52 51 — — 48 47 46 — 44 — 42 — 40 39 — 37 36 — 34 33 73 — 32 — 30 — — 27 26 25 24 — 22 21 — — — — — — — 15 14 — — — — 10 9 8 — 6 5 4 — 2 —
SALEABLE	NOT APPLICABLE	34566-4883	9	A	BLACK	72 — — 69 — 67 — 65 — 63 — — 60 — — 57 56 — — 53 — — — 49 — 47 46 — 44 43 — — 40 — — 37 36 35 — 33 73 — — 31 30 29 28 — — — 24 — — 21 20 — — 17 — 16 15 14 13 — 11 10 — — — — 5 4 3 2 1

MX123 52/66/73/80-WAY RECEPTACLE ASSY SEALED PIN OUT SHEET

STATUS	GM PART #	HRNS CONN ASSY			TPA	GROMMET CAP
		MATERIAL/PART NUMBER	WIRE DRESS OPTION	KEY OPTION Fp	COLOR OPTION Fp	NUMBERS INDICATE CAVITIES OPEN FOR CIRCUITS Fp
SALEABLE	NOT APPLICABLE	34566-4893	9	B	ST GRY	72 71 70 69 68 67 66 65 64 63 62 61 60 59 58 57 56 55 54 53 52 51 50 49 48 47 46 45 44 43 42 41 40 39 38 37 36 35 34 33 73 32 31 30 29 28 27 26 25 24 23 22 21 20 19 18 17 16 15 14 13 12 11 10 9 8 7 6 5 4 3 2 1
SALEABLE	NOT APPLICABLE	34566-4913	9	B	ST GRY	72 71 70 69 68 67 66 65 64 63 62 61 60 59 58 57 56 55 54 53 52 51 50 49 48 47 46 45 44 43 42 41 40 39 38 37 36 35 34 33 73 32 31 30 29 28 27 26 25 24 23 22 21 20 19 18 17 16 15 14 13 12 11 10 9 8 7 6 5 4 3 2 1
SALEABLE	NOT APPLICABLE	34566-4923	9	A	BLACK	72 71 70 69 68 67 66 65 64 63 62 61 60 59 58 57 56 55 54 53 52 51 50 49 48 47 46 45 44 43 42 41 40 39 38 37 36 35 34 33 73 32 31 30 29 28 27 26 25 24 23 22 21 20 19 18 17 16 15 14 13 12 11 10 9 8 7 6 5 4 3 2 1
SALEABLE	NOT APPLICABLE	34566-4933	0	C	BLUE	72 71 70 69 68 67 66 65 64 63 62 61 60 59 58 57 56 55 54 53 52 51 50 49 48 47 46 45 44 43 42 41 40 39 38 37 36 35 34 33 73 32 31 30 29 28 27 26 25 24 23 22 21 20 19 18 17 16 15 14 13 12 11 10 9 8 7 6 5 4 3 2 1
SALEABLE	NOT APPLICABLE	34566-4943	0	A	BLACK	72 71 70 69 68 67 66 65 64 63 62 61 60 59 58 57 56 55 54 53 52 51 50 49 48 47 46 45 44 43 42 41 40 39 38 37 36 35 34 33 73 32 31 30 29 28 27 26 25 24 23 22 21 20 19 18 17 16 15 14 13 12 11 10 9 8 7 6 5 4 3 2 1
SALEABLE	NOT APPLICABLE	34566-4953	0	B	ST GRY	72 71 70 69 68 67 66 65 64 63 62 61 60 59 58 57 56 55 54 53 52 51 50 49 48 47 46 45 44 43 42 41 40 39 38 37 36 35 34 33 73 32 31 30 29 28 27 26 25 24 23 22 21 20 19 18 17 16 15 14 13 12 11 10 9 8 7 6 5 4 3 2 1
SALEABLE	NOT APPLICABLE	34566-4963	9	A	BLACK	72 71 70 69 68 67 66 65 64 63 62 61 60 59 58 57 56 55 54 53 52 51 50 49 48 47 46 45 44 43 42 41 40 39 38 37 36 35 34 33 73 32 31 30 29 28 27 26 25 24 23 22 21 20 19 18 17 16 15 14 13 12 11 10 9 8 7 6 5 4 3 2 1
SALEABLE	NOT APPLICABLE	34566-4973	9	B	ST GRY	72 71 70 69 68 67 66 65 64 63 62 61 60 59 58 57 56 55 54 53 52 51 50 49 48 47 46 45 44 43 42 41 40 39 38 37 36 35 34 33 73 32 31 30 29 28 27 26 25 24 23 22 21 20 19 18 17 16 15 14 13 12 11 10 9 8 7 6 5 4 3 2 1
SALEABLE	NOT APPLICABLE	34566-4983	0	B	ST GRY	72 71 70 69 68 67 66 65 64 63 62 61 60 59 58 57 56 55 54 53 52 51 50 49 48 47 46 45 44 43 42 41 40 39 38 37 36 35 34 33 73 32 31 30 29 28 27 26 25 24 23 22 21 20 19 18 17 16 15 14 13 12 11 10 9 8 7 6 5 4 3 2 1
SALEABLE	NOT APPLICABLE	34566-4993	0	A	BLACK	72 71 70 69 68 67 66 65 64 63 62 61 60 59 58 57 56 55 54 53 52 51 50 49 48 47 46 45 44 43 42 41 40 39 38 37 36 35 34 33 73 32 31 30 29 28 27 26 25 24 23 22 21 20 19 18 17 16 15 14 13 12 11 10 9 8 7 6 5 4 3 2 1
SALEABLE	NOT APPLICABLE	34566-5013	9	B	ST GRY	72 71 70 69 68 67 66 65 64 63 62 61 60 59 58 57 56 55 54 53 52 51 50 49 48 47 46 45 44 43 42 41 40 39 38 37 36 35 34 33 73 32 31 30 29 28 27 26 25 24 23 22 21 20 19 18 17 16 15 14 13 12 11 10 9 8 7 6 5 4 3 2 1
SALEABLE	NOT APPLICABLE	34566-5023	0	C	BLUE	72 71 70 69 68 67 66 65 64 63 62 61 60 59 58 57 56 55 54 53 52 51 50 49 48 47 46 45 44 43 42 41 40 39 38 37 36 35 34 33 73 32 31 30 29 28 27 26 25 24 23 22 21 20 19 18 17 16 15 14 13 12 11 10 9 8 7 6 5 4 3 2 1
SALEABLE	NOT APPLICABLE	34566-5033	0	A	BLACK	72 71 70 69 68 67 66 65 64 63 62 61 60 59 58 57 56 55 54 53 52 51 50 49 48 47 46 45 44 43 42 41 40 39 38 37 36 35 34 33 73 32 31 30 29 28 27 26 25 24 23 22 21 20 19 18 17 16 15 14 13 12 11 10 9 8 7 6 5 4 3 2 1
SALEABLE	NOT APPLICABLE	34566-5043	0	A	BLACK	73 31
SALEABLE	NOT APPLICABLE	34566-5053	0	B	ST GRY	73 47 31 20 17 1

MX123 52/66/73/80-WAY RECEPTACLE ASSY SEALED PIN OUT SHEET

STATUS	GM PART #	HRNS CONN ASSY			TPA	GROMMET CAP																	
		MATERIAL/PART NUMBER	WIRE DRESS OPTION	KEY OPTION Fp	COLOR OPTION Fp	NUMBERS INDICATE CAVITIES OPEN FOR CIRCUITS Fp																	
SALEABLE	NOT APPLICABLE	34566-5063	9	H	ST GRY	80	79	78	77	76	75	74	73	72	71	70	69	68	67	66	65	64	63	62	61
						60	59	58	57	56	55	54	53	52	51	50	49	48	47	46	45	44	43	42	41
						40	39	38	37		35	34	33	32		30	29		27	26		24	23	22	21
						20	19	18	17			14	13	12	11	10	9	8		6	5		3	2	
SALEABLE	NOT APPLICABLE	34566-5073	9	A	BLACK	72	71	70	69	68	67	66	65	64	63	62	61	60	59	58	57	56	55	54	53
						52	51	50	49	48	47	46	45	44	43	42	41	40	39	38	37	36		34	33
						73				32	31	30	29	28	27	26		24	23	22	21	20	19	18	
										16			13	12	11	10	9	8							1
SALEABLE	NOT APPLICABLE	34566-5083	9	A	BLACK			70	69						63	62	61	60		58	57	56	55	54	53
						52	51		49					44	43	42	41			38	37			34	
						73				32			29	28	27	26			23				19	18	
										16	15		13	12	11	10		8					3		
SALEABLE	NOT APPLICABLE	34566-5093	0	B	ST GRY	72	71	70	69	68	67	66	65	64	63	62	61	60	59	58	57	56	55	54	53
						52	51	50	49	48	47	46	45	44	43	42	41	40	39	38	37	36	35	34	33
						73							29		27				23	22	21			18	
										16	15	14	13					8	7	6	5	4	3		
SALEABLE	NOT APPLICABLE	34566-5113	0	A	BLACK	72	71	70	69	68	67	66		64	63	62		60	59				55	54	53
						52			49	48				44	43	42	41	40	39				35	34	33
						73				32			29		27		25	24	23				19	18	17
										16			13	12	11		9	8	7	6	5	4	3	2	1
SALEABLE	NOT APPLICABLE	34566-5123	9	C	BLUE	72		70		68	67	66			63	62			59		57				53
						52	51			48	47	46	45	44				40	39	38	37	36		34	33
						73				32		30			27	26	25	24		22	21	20			
											15	14				10	9	8		6	5	4		2	
SALEABLE	NOT APPLICABLE	34566-5133	9	B	ST GRY	72	71	70		68	67	66				62	61	60	59	58	57	56	55	54	53
						52	51	50		48	47	46				42	41	40	39	38	37	36	35	34	33
						73				32	31	30	29	28	27	26	25	24	23						
										16	15	14	13			10	9	8							
SALEABLE	NOT APPLICABLE	34566-5143	0	C	BLUE	72		70		68	67	66			63	62			59		57				53
						52	51			48	47	46		44		42		40	39		37	36		34	33
						73				32		30				26	25	24		22	21	20			
											15	14				10	9	8		6	5	4		2	
SALEABLE	NOT APPLICABLE	34566-5153	0	A	BLACK			70	69						63	62	61	60		58	57	56	55	54	53
						52	51		49		47			44	43	42	41				37	36	35	34	33
						73				32			29	28	27	26	25						19	18	
										16	15		13	12	11	10							3		
SALEABLE	NOT APPLICABLE	34566-5163	9	A	BLACK	72			69		67		65		63			60			57	56			53
									49		47			44	43			40			37	36	35		33
						73					31	30	29	28				24			21	20			17
										16	15	14			11	10					5	4	3	2	1
SALEABLE	NOT APPLICABLE	34566-5173	9	B	ST GRY					68	67			64	63				59		57				
												46	45		43				39		37				
						73				32		30	29	28	27						21				
																10				6	5	4	3		
SALEABLE	NOT APPLICABLE	34566-5183	0	B	ST GRY					68	67			64					59	58				54	
												46	45	44					39	38					
						73				32		30	29	28	27				23	22					17
														12		10		8							1
SALEABLE	NOT APPLICABLE	34566-5193	0	A	BLACK			70	69						63	62	61	60		58	57	56	55	54	53
						52	51		49					44	43	42	41				37	36		34	
						73				32			29	28	27	26							19	18	17
										16	15		13	12	11	10							3	2	1
SALEABLE	NOT APPLICABLE	34566-5213	0	A	BLACK	72	71	70	69	68	67	66	65	64	63	62		60	59				55	54	53
						52			49	48				44	43	42	41	40	39				35	34	33
						73				32			29		27		25	24	23				19	18	17
										16			13	12	11		9	8	7	6	5	4	3	2	1
SALEABLE	NOT APPLICABLE	34566-5223	0	C	BLUE	72		70			67	66			63	62			59		57				53
						52	51			48		46		44		42		40	39					34	33
						73				32		30			27	26	25			22	21				
											15	14				10	9			6	5	4			

MX123 52/66/73/80-WAY RECEPTACLE ASSY SEALED PIN OUT SHEET

STATUS	GM PART #	HRNS CONN ASSY			TPA	GROMMET CAP
		MATERIAL/PART NUMBER	WIRE DRESS OPTION	KEY OPTION Fp	COLOR OPTION Fp	NUMBERS INDICATE CAVITIES OPEN FOR CIRCUITS Fp
SALEABLE	NOT APPLICABLE	34566-5233	0	C	BLUE	72 70 68 67 66 63 62 59 57 56 55 53 52 51 48 47 46 44 42 40 39 38 34 33 73 32 30 26 25 22 21 19 18 15 14 10 9 6 5 4 3
SALEABLE	NOT APPLICABLE	34566-5243	0	C	BLUE	72 71 70 69 68 67 66 65 63 62 61 59 58 57 56 55 54 53 51 50 49 48 46 45 44 43 42 41 40 39 38 36 35 34 33 73 31 30 29 28 27 26 25 22 21 20 19 18 17 16 15 14 9 7 6 5 4 3 2 1
SALEABLE	NOT APPLICABLE	34566-5253	0	B	ST GRY	67 66 63 59 58 57 56 55 53 50 49 48 46 45 43 39 38 37 36 35 34 33 73 29 27 23 22 21 18 16 15 14 13 8 7 6 5 4 3
SALEABLE	NOT APPLICABLE	34566-5263	0	B	ST GRY	72 71 70 68 67 66 62 61 60 59 58 57 56 55 54 53 52 51 50 48 47 46 42 41 40 39 38 37 36 35 34 33 73 32 31 30 29 28 27 25 24 17 16 15 14 13 10 8 2 1
SALEABLE	NOT APPLICABLE	34566-5273	0	A	BLACK	70 69 63 62 61 60 58 57 56 55 54 53 52 51 49 44 43 42 41 37 36 34 73 32 29 28 27 26 23 19 18 16 15 13 12 11 10 9 8 3
SALEABLE	NOT APPLICABLE	34566-5283	0	C	BLUE	72 70 68 67 66 63 62 59 57 56 55 54 53 52 51 48 47 46 44 42 40 39 34 33 73 32 30 26 25 22 21 19 18 15 14 10 9 6 5 4 3
SALEABLE	NOT APPLICABLE	34566-5293	0	A	BLACK	70 69 63 62 61 60 58 57 56 55 54 53 52 51 49 44 43 42 41 40 37 36 34 73 32 29 28 27 26 19 18 17 16 15 13 12 11 10 3 2 1
SALEABLE	NOT APPLICABLE	34566-5313	0	C	BLUE	72 70 68 67 66 63 62 59 57 56 55 53 52 51 48 47 46 44 42 40 39 38 37 36 34 33 73 32 30 27 26 25 24 22 21 19 18 15 14 10 9 8 6 5 4 3 2
SALEABLE	NOT APPLICABLE	34566-5323	0	G	BLUE	80 78 77 75 74 73 72 70 69 67 65 64 63 62 60 58 57 55 54 52 51 50 49 47 45 40 38 37 33 32 31 27 26 25 24 20 18 17 10 9 8 6 5 4 3 2 1
SALEABLE	NOT APPLICABLE	34566-5333	0	A	BLACK	72 71 70 68 67 66 65 64 63 62 60 59 56 53 51 49 48 47 46 45 44 43 41 40 73 30 29 28 26 25 24 20 17 12 11
SALEABLE	NOT APPLICABLE	34566-5343	0	B	ST GRY	68 67 64 59 58 54 46 45 39 38 73 32 30 29 28 27 23 22 17 12 10 8 6 1
SALEABLE	NOT APPLICABLE	34566-5353	9	B	ST GRY	68 67 64 63 59 58 55 54 46 45 44 43 39 38 35 34 73 32 30 29 28 27 23 22 19 17 15 13 12 10 6 1
SALEABLE	NOT APPLICABLE	34566-5363	0	C	BLUE	72 70 68 66 63 62 59 57 53 52 51 48 47 46 44 42 40 39 38 34 33 73 32 30 26 25 22 21 15 14 10 9 6 5 4
SALEABLE	NOT APPLICABLE	34566-5373	0	C	BLUE	72 70 68 66 63 62 59 57 53 52 51 48 47 46 44 42 40 39 34 33 73 32 30 26 25 22 21 15 14 10 9 6
SALEABLE	NOT APPLICABLE	34566-5383	0	C	BLUE	72 70 68 66 63 62 59 57 53 52 51 48 47 46 44 42 40 39 37 36 34 33 73 32 30 26 25 24 22 21 15 14 10 9 8 6 5 4 2

MX123 52/66/73/80-WAY RECEPTACLE ASSY SEALED PIN OUT SHEET

STATUS	GM PART #	HRNS CONN ASSY			TPA	GROMMET CAP																			
		MATERIAL/PART NUMBER	WIRE DRESS OPTION	KEY OPTION Fp	COLOR OPTION Fp	NUMBERS INDICATE CAVITIES OPEN FOR CIRCUITS Fp																			
SALEABLE	NOT APPLICABLE	34566-5393	0	A	BLACK			70	69						63							56	55	54	53
						52	51		49					44	43	42	41					36		34	
						73				32				28		26			23		21		19	18	
										16				12		10		8			5		3		
SALEABLE	NOT APPLICABLE	34566-5413	0	A	BLACK			70	69						63							56	55	54	53
						52	51		49					44	43	42	41					36		34	
						73				32				28		26			23		21		19	18	
										16	15			12		10		8			5		3		
SALEABLE	NOT APPLICABLE	34566-5423	0	A	BLACK			70	69						63					58		56	55	54	53
						52	51		49					44	43	42	41					36		34	
						73				32				28		26							19	18	
										16				12		10							3		
SALEABLE	NOT APPLICABLE	34566-5433	9	B	ST GRY					68	67			64					59	58				54	
												46	45						39	38					
						73				32		30	29	28	27				23	22					17
																10				6					1
SALEABLE	NOT APPLICABLE	34566-5443	9	B	ST GRY					68	67			64					59	58				54	
												46	45						39	38					
						73				32		30	29	28	27				23	22					17
											15		13			10				6					1
SALEABLE	NOT APPLICABLE	34566-5453	0	B	ST GRY					68	67			64					59	58				54	
												46	45						39	38					
						73				32		30	29	28	27				23	22					17
											15		13			10				6					1
SALEABLE	NOT APPLICABLE	34566-5463	0	A	BLACK	72		70							63										
						52			49								41								
						73					31	30		28	27	26			23			20	19		
										16	15	14		12		10				6					
SALEABLE	NOT APPLICABLE	34566-5473	0	A	BLACK	72	71	70		68	67	66	65	64	63	62		60	59			56			53
						52	51			48	47	46	45	44	43	42	41	40							
						73					31	30	29	28	27	26	25	24	23			20	19		17
										16	15	14		12	11	10				6					
SALEABLE	NOT APPLICABLE	34566-5483	0	B	ST GRY	72		70		68		66		64	63			60	59				55	54	53
						52		50		48		46						40	39				35	34	33
						73				32	31	30	29	28	27	26	25	24				20			17
										16						10		8			5	4		2	1
SALEABLE	NOT APPLICABLE	34566-5493	0	A	BLACK	72		70	69						63			60	59	58	57	56	55	54	53
						52	51		49					44	43	42	41	40			37	36		34	
						73				32				28		26							19	18	17
										16	15			12		10							3	2	1
SALEABLE	NOT APPLICABLE	34566-5513	9	B	ST GRY					68	67			64	63					58			55		
												46	45		43					38			35		
						73				32		30	29	28	27					22			19		17
																10									1
SALEABLE	NOT APPLICABLE	34566-5523	9	A	BLACK	72			69		67	66	65		63			60			57	56			53
									49		47			44	43	42		40			37	36	35		33
						73					31	30	29	28	27	26		24			21	20			17
										16	15	14	13		11	10					5	4	3	2	1
SALEABLE	NOT APPLICABLE	34566-5533	9	B	ST GRY					68	67			64					59	58				54	
												46	45						39	38					
						73				32		30	29	28	27				23	22					17
																10	9	8		6					1
SALEABLE	NOT APPLICABLE	34566-5543	9	A	BLACK					68	67			64					59	58				54	
												46	45						39	38					
						73				32		30	29	28	27				23	22					17
														12		10		8		6					1
SALEABLE	NOT APPLICABLE	34566-5553	9	B	ST GRY					68	67			64					59	58				54	
												46	45						39	38					
						73				32		30	29	28	27				23	22					17
														12		10		8		6					1

MX123 52/66/73/80-WAY RECEPTACLE ASSY SEALED PIN OUT SHEET

STATUS	GM PART #	HRNS CONN ASSY			TPA	GROMMET CAP
		MATERIAL/PART NUMBER	WIRE DRESS OPTION	KEY OPTION Fp	COLOR OPTION Fp	NUMBERS INDICATE CAVITIES OPEN FOR CIRCUITS Fp
SALEABLE	NOT APPLICABLE	34566-5563	0	A	BLACK	72 71 70 69 . . . . 64 63 . . 60 59 58 57 56 55 54 53 52 51 . 49 48 47 . 45 44 43 42 41 . . . 37 36 . 34 33 73 32 . 30 . 28 . 26 . . . . . 19 18 17 16 15 . . 12 . 10 . . . . . 3 2 1
SALEABLE	NOT APPLICABLE	34566-5573	0	C	BLUE	72 . 70 . 68 . 66 . . 63 62 . . 59 58 57 56 55 . 53 52 51 . 49 48 47 46 . 44 . 42 . 40 39 38 37 36 . 34 33 73 32 . 30 . . . 26 25 24 23 22 21 20 19 18 17 . 15 14 13 . . 10 9 8 7 6 5 4 . 2 1
SALEABLE	NOT APPLICABLE	34566-5583	0	B	ST GRY	72 . 70 . 68 . 66 . 64 63 . . 60 59 . . . 55 54 53 52 . 50 . 48 . 46 . . . . . 40 39 . . . 35 34 33 73 32 31 30 29 28 27 26 25 24 23 . . 20 . . 17 16 . . . . . 10 . 8 7 . 5 4 . 2 1
SALEABLE	NOT APPLICABLE	34566-5593	0	C	BLUE	72 . 70 . 68 . 66 . . 63 62 . . 59 . 57 . 55 . 53 52 51 . . 48 47 46 . 44 . 42 . 40 39 . . . . 34 33 73 32 . 30 . . . 26 25 . 23 22 21 . . . . . . 15 14 . . . 10 9 . 7 6 5 4 . . .
SALEABLE	NOT APPLICABLE	34566-5613	0	C	BLUE	72 . 70 . 68 . . . 63 62 . . 59 58 57 . . . 53 52 51 . . 48 47 . . 44 . 42 . 40 39 . 37 36 . 34 33 73 32 . 30 . . 27 26 25 24 23 22 21 20 . . 17 . 15 14 13 . . . . 8 7 6 5 4 . 2 1
SALEABLE	NOT APPLICABLE	34566-5623	0	C	BLUE	72 . 70 . 68 . . . 63 62 . . 59 . 57 . . . 53 52 51 . . 48 47 . . 44 . 42 . 40 39 . 37 36 . 34 33 73 32 . 30 . . 27 26 25 24 23 22 21 20 . . . . 15 14 13 . . . . 8 7 6 5 4 . 2 .
SALEABLE	NOT APPLICABLE	34566-5633	0	B	ST GRY	72 . . . . . 62 61 . . . . 52 . . . 48 . 46 . 44 43 . 41 40 . . . . 73 . . 30 . . . . . 20 19 18 . 16 15 14 . . . . . 4 . . .
SALEABLE	NOT APPLICABLE	34566-5643	0	B	ST GRY	72 . . . . . 62 61 . . . . 52 . . . 48 . 46 . . 43 . 41 40 . . . . 73 . . 30 . . . . . 20 19 18 . 16 15 14 . . . . . 4 . . .
SALEABLE	NOT APPLICABLE	34566-5653	0	A	BLACK	72 71 70 69 68 . 66 65 64 63 . 61 60 . . 57 56 . 54 53 52 51 50 49 48 . 46 45 44 43 . . 40 39 38 37 36 . 34 33 73 32 31 30 29 28 . 26 25 . 23 22 21 . . . 17 . 15 14 13 12 . . 9 . 7 6 5 . . 2 .
SALEABLE	NOT APPLICABLE	34566-5663	0	C	BLUE	. . . 69 . 67 66 . 64 . 62 . 60 . . 57 . 55 54 . 52 51 50 . 48 . 46 45 44 . 42 . . . . 37 . 35 34 33 73 32 31 . . 28 27 26 . . . . . 19 18 . 16 15 14 13 12 11 10 9 . . . . . .
SALEABLE	NOT APPLICABLE	34566-5673	0	C	BLUE	. . . 69 . 67 66 . 64 . . 61 60 . . 57 . . 54 . 52 51 50 49 48 . 46 45 44 . . 41 . . . 37 . . 34 33 73 32 31 . . 28 27 . 25 . . . . . 18 . 16 15 14 13 12 11 10 9 . . . . . .
SALEABLE	NOT APPLICABLE	34566-5683	0	B	ST GRY	72 . . . . . 62 61 . . . . 52 . . . 48 . 46 . 44 43 . 41 40 . . . . 73 . . 30 . . . . . 20 19 18 . 16 . 14 . . . . . 4 . . .
SALEABLE	NOT APPLICABLE	34566-5693	0	A	BLACK	72 71 70 69 68 . 66 65 64 63 . 61 60 . . 57 56 . 54 53 52 51 50 49 48 . 46 45 44 43 . . 40 39 38 37 36 . 34 33 73 32 31 30 29 28 . 26 25 . 23 22 21 20 . . . . 15 14 13 12 . . 9 . 7 6 5 4 . 2 .
SALEABLE	NOT APPLICABLE	34566-5713	0	C	BLUE	. . . 69 . 67 66 . 64 . 62 . 60 . . 57 . 55 54 . 52 51 50 . 48 . 46 45 44 . 42 . . . . 37 . 35 34 33 73 32 31 . . 28 27 26 . . . . . 19 18 17 16 15 14 13 12 11 10 9 8 7 . . . . .
SALEABLE	NOT APPLICABLE	34566-5723	0	C	BLUE	. . . 69 . 67 66 . 64 . . 61 60 . . 57 . . 54 . 52 51 50 49 48 . 46 45 44 . . 41 . . . 37 . . 34 33 73 . 31 . . 28 27 . 25 . . . . . 18 . 16 15 14 13 12 11 10 9 8 7 . . . . .

MX123 52/66/73/80-WAY RECEPTACLE ASSY SEALED PIN OUT SHEET

STATUS	GM PART #	HRNS CONN ASSY			TPA	GROMMET CAP																	
		MATERIAL/PART NUMBER	WIRE DRESS OPTION	KEY OPTION Fp	COLOR OPTION Fp	NUMBERS INDICATE CAVITIES OPEN FOR CIRCUITS Fp																	
SALEABLE	NOT APPLICABLE	34566-5733	0	A	BLACK		71	70	69					64	63			60	59	58	57	56	55	54	53
						52	51		49				45	44	43	42	41				37	36		34	
						73				32		30		28		26							19	18	
										16	15			12		10							3		
SALEABLE	NOT APPLICABLE	34566-5743	0	A	BLACK		71	70	69		67			64	63			60	59		57	56	55	54	53
						52	51		49				45	44	43	42	41				37	36		34	
						73				32		30		28		26							19	18	
										16	15			12		10							3		
SALEABLE	NOT APPLICABLE	34566-5753	0	A	BLACK		71	70	69					64	63			60	59		57	56	55	54	53
						52	51		49				45	44	43	42	41				37	36		34	
						73				32		30		28		26			23		21		19	18	
										16	15			12		10		8			5		3		
SALEABLE	NOT APPLICABLE	34566-5763	0	C	BLUE	72		70		68		66			63	62			59		57				53
						52	51			48	47	46		44		42		40	39		37	36		34	33
						73				32		30			27	26	25	24		22	21	20			
											15	14	13			10	9	8		6	5	4		2	
SALEABLE	NOT APPLICABLE	34566-5773	0	C	BLUE	72		70		68					63	62			59	58	57				53
						52	51			48	47			44		42		40	39		37	36		34	33
						73				32		30			27	26	25	24		22	21	20			17
											15	14	13					8		6	5	4		2	1
SALEABLE	NOT APPLICABLE	34566-5783	0	C	BLUE	72		70		68					63	62			59		57				53
						52	51			48	47			44		42		40	39		37	36		34	33
						73				32		30			27	26	25	24		22	21	20			
											15	14	13					8		6	5	4		2	
SALEABLE	NOT APPLICABLE	34566-5793 SAME AS P/N 34566-4013	0	B	ST GRY	72		70		68		66						60	59				55	54	53
						52		50		48		46						40	39				35	34	33
						73				32	31	30	29	28	27	26	25	24							17
										16						10		8						2	1
SALEABLE	NOT APPLICABLE	34566-5813	0	B	ST GRY	72		70		68		66						60	59				55	54	53
						52		50		48		46						40	39				35	34	33
						73				32	31	30	29	28	27	26	25	24	23				19	18	17
										16						10		8	7					2	1
SALEABLE	NOT APPLICABLE	34566-5823	0	A	BLACK	72		70							63										
						52			49						43		41								
						73					31	30		28	27	26			23			20	19		
										16	15	14				10				6					
SALEABLE	NOT APPLICABLE	34566-5833	0	A	BLACK	72		70							63										
						52			49						43		41								
						73					31	30		28	27	26			23			20	19		
										16	15	14		12		10				6					
SALEABLE	NOT APPLICABLE	34566-5843	0	H	ST GRY		79					74	73	72	71			68	67		65	64	63	62	61
							59		57			54		52										42	41
								38				34	33				29		27		25				
								18			15	14			11	10	9	8	7						
SALEABLE	NOT APPLICABLE	34566-5853	0	H	ST GRY		79					74	73	72	71			68	67		65	64	63	62	61
							59		57			54		52									43	42	41
								38					33				29		27		25				
								18			15	14			11	10	9	8	7						
SALEABLE	NOT APPLICABLE	34566-5863	0	C	BLUE	72		70				66			63	62			59		57	56	55		53
						52	51					46		44		42		40	39		37	36		34	33
						73				32		30				26	25			22	21		19	18	
											15	14				10	9			6			3		
SALEABLE	NOT APPLICABLE	34566-5873	0	B	ST GRY	72										62	61								
						52				48	47	46		44	43		41	40							
						73						30										20	19	18	
										16	15	14										4			
SALEABLE	NOT APPLICABLE	34566-5883	0	B	ST GRY	72										62	61								
						52				48	47	46			43		41	40							
						73						30										20	19	18	
										16	15	14										4			

MX123 52/66/73/80-WAY RECEPTACLE ASSY SEALED PIN OUT SHEET

STATUS	GM PART #	HRNS CONN ASSY			TPA	GROMMET CAP
		MATERIAL/PART NUMBER	WIRE DRESS OPTION	KEY OPTION Fp	COLOR OPTION Fp	NUMBERS INDICATE CAVITIES OPEN FOR CIRCUITS Fp
SALEABLE	NOT APPLICABLE	34566-5893	0	C	BLUE	69 67 66 62 60 57 55 54 52 51 50 48 46 45 44 42 37 35 34 33 73 32 28 27 26 19 18 16 15 14 13 12 11 10 9
SALEABLE	NOT APPLICABLE	34566-5913	0	C	BLUE	69 67 66 64 61 60 57 54 52 51 50 49 48 46 45 44 41 37 34 33 73 32 28 27 25 18 16 15 14 13 12 11 10 9
SALEABLE	NOT APPLICABLE	34566-5933	0	C	BLUE	72 70 68 66 63 62 59 57 56 55 53 52 51 48 47 46 44 42 40 39 34 33 73 32 30 26 25 23 22 21 15 14 10 9 7 6 5 4
SALEABLE	NOT APPLICABLE	34566-5943	0	C	BLUE	72 70 68 67 66 63 62 59 57 56 55 53 52 51 49 48 47 46 44 42 40 39 34 33 73 32 30 27 26 25 22 21 20 15 14 13 10 9 6 5 4
SALEABLE	NOT APPLICABLE	34566-5953	0	A	BLACK	71 70 69 65 64 63 62 61 60 58 57 56 55 54 53 52 51 49 48 47 45 44 43 42 41 37 36 34 73 32 30 29 28 27 26 24 19 18 16 15 13 12 11 10 3
SALEABLE	NOT APPLICABLE	34566-5963	0	B	ST GRY	72 71 70 68 67 66 62 61 60 59 58 57 56 55 54 53 52 51 50 48 47 46 42 41 40 39 38 37 36 35 34 33 73 32 31 30 29 28 27 26 25 24 18 16 15 14 13 10 9 8 3
SALEABLE	NOT APPLICABLE	34566-5973	0	C	BLUE	72 70 68 67 66 63 62 59 57 56 55 53 52 51 48 47 46 44 42 40 39 34 33 73 32 30 27 26 25 22 21 19 18 15 14 10 9 6 5 4 3
SALEABLE	NOT APPLICABLE	34566-5983	0	C	BLUE	69 67 66 64 62 60 57 55 54 52 51 50 48 46 45 44 42 37 35 34 33 73 32 28 27 26 19 18 16 15 14 13 12 11 10 9
SALEABLE	NOT APPLICABLE	34566-5993	0	A	BLACK	71 70 69 67 66 65 63 62 61 60 58 57 56 55 54 53 52 51 50 49 47 45 44 43 42 41 40 39 37 36 35 34 73 32 31 30 29 28 27 26 25 24 23 21 20 19 18 17 16 15 14 13 12 11 10 9 8 6 5 3 1
SALEABLE	NOT APPLICABLE	34566-6013	0	B	ST GRY	69 67 65 61 60 59 58 57 54 53 51 50 49 48 47 46 45 43 40 39 37 34 33 73 32 31 30 29 26 24 23 22 21 20 18 16 15 14 13 10 9 8 7 6 5 4
SALEABLE	NOT APPLICABLE	34566-6023	0	A	BLACK	72 71 70 69 68 67 60 59 58 57 56 54 53 52 51 50 49 48 47 45 44 43 40 39 38 37 36 35 34 33 73 32 31 30 29 28 24 23 22 21 20 19 17 16 15 13 12 11 10 7 6 5 4 3 2 1
SALEABLE	NOT APPLICABLE	34566-6033	0	A	BLACK	70 69 63 62 61 58 57 56 55 54 53 52 51 49 44 43 42 41 37 36 34 73 32 29 28 27 26 21 19 18 16 15 13 12 11 10 8 5 3
SALEABLE	NOT APPLICABLE	34566-6043	0	B	ST GRY	68 67 66 65 64 58 55 46 45 38 35 73 32 30 29 28 27 22 19 17 16 10 1
SALEABLE	NOT APPLICABLE	34566-6053	0	B	ST GRY	72 62 61 52 48 47 46 43 41 40 73 30 20 19 18 16 15 14 4 2
SALEABLE	NOT APPLICABLE	34566-6063	0	C	BLUE	69 67 66 64 62 60 57 55 54 52 51 50 48 46 45 44 42 37 35 34 33 73 32 28 27 26 19 18 17 16 15 14 13 12 11 10 9

MX123 52/66/73/80-WAY RECEPTACLE ASSY SEALED PIN OUT SHEET

STATUS	GM PART #	HRNS CONN ASSY			TPA	GROMMET CAP
		MATERIAL/PART NUMBER	WIRE DRESS OPTION	KEY OPTION Fp	COLOR OPTION Fp	NUMBERS INDICATE CAVITIES OPEN FOR CIRCUITS Fp
SALEABLE	NOT APPLICABLE	34566-6073	0	C	BLUE	69 67 66 64 61 60 57 54 52 51 50 49 48 46 45 44 41 37 34 33 73 32 28 27 25 18 17 16 15 14 13 12 11 10 9
SALEABLE	NOT APPLICABLE	34566-6083	0	C	BLUE	72 70 68 67 66 63 62 59 57 53 52 51 48 47 46 44 42 40 39 37 36 34 33 73 32 30 26 25 22 21 15 14 10 9 6 5 4 2
SALEABLE	NOT APPLICABLE	34566-6093	0	B	ST GRY	72 70 67 63 62 61 60 59 52 46 43 41 40 73 27 20 19 18 16 14 11 4
SALEABLE	NOT APPLICABLE	34566-6113	0	A	BLACK	72 71 70 69 68 66 65 64 63 62 61 60 58 57 56 55 54 53 52 51 50 49 48 46 45 44 43 42 41 40 39 38 37 36 34 33 73 32 31 30 29 28 27 26 25 23 22 21 20 19 18 16 15 14 13 12 11 10 9 8 7 6 5 4 3 2
SALEABLE	NOT APPLICABLE	34566-6123	0	C	BLUE	69 67 66 64 62 60 57 54 52 51 50 48 46 45 44 42 37 34 33 73 28 27 26 16 15 14 13 12 11 10 9 8 7
SALEABLE	NOT APPLICABLE	34566-6133	9	C	BLUE	72 70 68 67 63 62 59 57 53 52 51 48 47 44 42 40 39 38 37 36 34 33 73 32 30 26 25 24 22 21 15 14 9 8 6 5 4 2
SALEABLE	NOT APPLICABLE	34566-6173	9	B	ST GRY	67 66 48 47 41 73 32 31 30 29 27 26 25 24 22 21 19 18 17 16 15 14 13 11 10 9 8 7 6 5 4 3 1
SALEABLE	NOT APPLICABLE	34566-6183	9	A	BLACK	66 48 47 41 73 32 31 30 29 27 26 25 24 22 21 19 18 17 16 15 14 13 11 10 9 8 7 6 5 4 3 1
SALEABLE	NOT APPLICABLE	34566-6193	9	B	ST GRY	72 71 70 69 68 67 66 65 64 62 61 60 59 58 57 56 55 54 52 51 50 49 46 44 41 40 38 37 36 73 32 31 30 29 28 27 26 25 24 21 20 18 17 16 15 14 13 12 10 9 8 7 6 5 4 3 2
SALEABLE	NOT APPLICABLE	34566-6213	9	A	BLACK	67 66 48 47 41 73 32 31 30 29 27 26 25 24 22 21 19 18 17 16 15 14 13 11 10 9 8 7 6 5 4 3 1
SALEABLE	NOT APPLICABLE	34566-6223	9	C	BLUE	72 70 68 66 63 62 59 53 52 51 48 47 46 44 40 39 34 33 73 32 30 27 26 25 22 21 20 15 14 13 10 9 6 5 4
SALEABLE	NOT APPLICABLE	34566-6233	9	B	ST GRY	72 70 68 66 60 59 55 54 53 52 50 48 46 40 39 35 34 33 73 32 31 30 29 28 27 26 25 24 17 16 10 8 2 1
SALEABLE	NOT APPLICABLE	34566-6243	9	A	BLACK	71 70 69 68 64 63 60 59 58 57 56 55 54 53 52 51 50 49 45 44 43 42 41 39 37 36 34 73 32 30 28 26 19 18 16 15 14 12 10 3
SALEABLE	NOT APPLICABLE	34566-6253	9	C	BLUE	72 70 68 67 66 63 62 59 57 53 52 51 49 48 47 46 44 40 39 37 36 34 33 73 32 30 27 26 25 24 22 21 20 15 14 13 10 9 8 6 5 4 2
SALEABLE	NOT APPLICABLE	34566-6263	9	B	ST GRY	72 71 70 68 67 66 62 61 60 59 58 57 56 55 54 53 52 51 50 48 47 46 42 41 40 39 38 37 36 35 34 33 73 32 31 30 29 28 27 26 25 24 18 17 16 15 14 13 10 8 3 2 1

MX123 52/66/73/80-WAY RECEPTACLE ASSY SEALED PIN OUT SHEET

STATUS	GM PART #	HRNS CONN ASSY			TPA	GROMMET CAP
		MATERIAL/PART NUMBER	WIRE DRESS OPTION	KEY OPTION Fp	COLOR OPTION Fp	NUMBERS INDICATE CAVITIES OPEN FOR CIRCUITS Fp
SALEABLE	NOT APPLICABLE	34566-6273	9	B	ST GRY	71 70 69 / 52 51 50 49 / 73 / 65 64 63 62 61 60 58 57 56 55 54 53 / 48 47 45 44 43 42 41 39 37 36 34 / 32 30 29 28 27 26 24 19 18 / 16 15 14 13 12 11 10 3
SALEABLE	NOT APPLICABLE	34566-6283	9	C	BLUE	72 70 / 52 51 / 73 / 68 67 66 63 62 59 57 53 / 48 47 46 44 40 39 34 33 / 32 30 27 26 25 22 21 / 15 14 10 9 6 5 4
SALEABLE	NOT APPLICABLE	34566-6293	9	B	ST GRY	72 71 70 / 52 51 50 / 73 / 68 67 66 62 61 60 59 58 57 56 55 54 53 / 48 47 46 42 41 40 39 38 37 36 35 34 33 / 32 31 30 29 28 27 26 25 24 17 / 16 15 14 13 10 8 2 1
SALEABLE	NOT APPLICABLE	34566-6313	9	B	ST GRY	70 69 / 52 51 50 49 / 73 / 63 62 61 60 58 57 56 55 54 53 / 44 43 42 41 39 37 36 34 / 32 29 28 27 26 19 18 / 16 15 14 13 12 11 10 3
SALEABLE	NOT APPLICABLE	34566-6323	9	B	ST GRY	71 70 69 / 52 51 50 49 / 73 / 64 63 60 59 58 57 56 55 54 53 / 45 44 43 42 41 39 37 36 34 / 32 30 28 26 19 18 / 16 15 14 12 10 3
SALEABLE	NOT APPLICABLE	34566-6333	9	C	BLUE	72 70 / 52 51 / 73 / 68 67 66 63 62 59 57 56 55 53 / 48 47 46 44 40 39 34 33 / 32 30 27 26 25 22 21 19 18 / 15 14 10 9 6 5 4 3
SALEABLE	NOT APPLICABLE	34566-6343	9	A	BLACK	70 69 / 52 51 50 49 / 73 / 63 62 61 60 58 57 56 55 54 53 / 44 43 42 41 40 39 37 36 34 / 32 29 28 27 26 19 18 17 / 16 15 14 13 12 11 10 3 2 1
SALEABLE	NOT APPLICABLE	34566-6353	9	C	BLUE	72 70 / 52 51 / 73 / 68 66 63 62 59 58 57 56 55 53 / 48 47 46 44 40 39 34 33 / 32 30 27 26 25 23 22 21 20 17 / 15 14 13 10 9 7 6 5 4 1
SALEABLE	NOT APPLICABLE	34566-6363	9	B	ST GRY	72 70 / 52 50 / 73 / 68 66 60 59 55 54 53 / 48 46 40 39 35 34 33 / 32 31 30 29 28 27 26 25 24 23 19 18 17 / 16 10 8 7 2 1
SALEABLE	NOT APPLICABLE	34566-6373	9	A	BLACK	72 71 70 69 / 52 51 50 49 / 73 / 67 64 63 60 59 58 57 56 55 54 53 / 47 45 44 43 42 41 40 39 37 36 34 / 32 30 28 26 23 21 19 18 17 / 16 15 14 12 10 8 5 3 2 1
SALEABLE	NOT APPLICABLE	34566-6383	9	A	BLACK	72 71 70 69 / 52 51 50 49 / 73 / 68 66 65 64 63 61 60 57 56 54 53 / 48 46 45 44 43 42 41 40 39 38 37 36 34 33 / 32 31 30 29 28 23 22 21 / 15 14 13 12 9 7 6 5 2 1
SALEABLE	NOT APPLICABLE	34566-6393	9	C	BLUE	71 70 69 / 52 51 50 49 / 73 / 67 66 65 64 62 61 60 58 57 55 54 / 48 47 46 45 44 42 41 38 37 35 34 33 / 32 28 27 26 25 19 18 17 / 16 15 14 13 12 11 10 9
SALEABLE	NOT APPLICABLE	34566-6413	9	B	ST GRY	72 / 52 / 73 / 68 67 63 62 61 60 59 55 / 48 47 46 44 43 41 40 38 37 36 35 / 30 27 20 19 18 17 / 16 15 14 11 8 4 1
SALEABLE	NOT APPLICABLE	34566-6423	9	C	BLUE	72 71 70 69 / 52 51 50 49 / 73 / 67 66 65 64 56 54 / 47 46 45 44 39 38 34 / 31 30 29 28 26 25 23 22 21 17 / 16 15 14 13 12 9 7 6 5
SALEABLE	NOT APPLICABLE	34566-6433	9	A	BLACK	72 70 / 52 51 / 73 / 67 63 60 59 58 57 56 55 / 48 47 46 43 42 40 39 38 37 36 35 / 28 27 22 21 18 17 / 12 11 9 7 2 1

MX123 52/66/73/80-WAY RECEPTACLE ASSY SEALED PIN OUT SHEET

STATUS	GM PART #	HRNS CONN ASSY			TPA	GROMMET CAP
		MATERIAL/PART NUMBER	WIRE DRESS OPTION	KEY OPTION Fp	COLOR OPTION Fp	NUMBERS INDICATE CAVITIES OPEN FOR CIRCUITS Fp
SALEABLE	NOT APPLICABLE	34566-6443	9	B	ST GRY	72 71 70 69 68 67 66 65 64 63 61 60 57 56 55 52 51 50 49 48 47 46 45 44 43 41 40 38 37 36 35 34 33 73 32 31 30 29 28 26 25 24 23 22 21 20 19 18 17 16 15 14 13 12 11 9 8 7 6 5 4 3 2 1
SALEABLE	NOT APPLICABLE	34566-6453	0	C	BLUE	71 70 69 67 65 64 62 61 60 57 54 52 51 50 49 48 47 46 45 44 42 41 37 34 33 73 32 28 27 26 25 18 17 16 15 14 13 12 11 10 9 8 7
SALEABLE	NOT APPLICABLE	34566-6463	0	B	ST GRY	72 68 67 62 61 55 52 48 47 46 43 40 73 30 20 19 18 16 15 14 8 4 2
SALEABLE	NOT APPLICABLE	34566-6473	9	C	BLUE	70 69 67 66 64 62 60 57 55 54 52 51 50 48 46 45 44 42 37 35 34 33 73 32 28 27 26 19 18 17 16 15 14 13 12 11 10 9 8 7
SALEABLE	NOT APPLICABLE	34566-6483	9	A	BLACK	72 71 70 69 68 66 65 64 63 61 60 57 56 54 53 52 51 50 49 48 46 45 44 43 40 39 38 37 36 34 33 73 32 31 30 29 28 26 25 23 22 21 20 15 14 13 12 9 7 6 5 2
SALEABLE	NOT APPLICABLE	34566-6493	9	B	ST GRY	72 70 62 61 55 52 48 47 46 43 41 40 73 30 20 19 18 16 15 14 4 2
SALEABLE	NOT APPLICABLE	34566-6513	0	B	ST GRY	72 68 67 62 61 55 54 52 46 43 40 73 20 19 18 17 16 15 14 8 4 3 2
SALEABLE	NOT APPLICABLE	34566-6523	0	B	ST GRY	68 67 64 59 58 54 46 45 39 38 73 32 30 29 28 27 23 22 17 15 13 11 10 6 1
SALEABLE	NOT APPLICABLE	34566-6533	9	B	ST GRY	68 67 64 46 45 73 32 30 29 28 27 17 10 7 1
SALEABLE	NOT APPLICABLE	34566-6543	9	A	BLACK	72 71 70 69 68 66 65 64 63 61 60 57 56 54 53 52 51 50 49 48 46 45 44 43 40 39 38 37 36 34 33 73 32 31 30 29 28 26 25 23 22 21 20 15 14 13 12 9 7 6 5 4 2
SALEABLE	NOT APPLICABLE	34566-6553	9	A	BLACK	72 71 70 69 67 64 63 60 59 58 57 56 55 54 53 52 51 50 49 47 45 44 43 42 41 40 39 37 36 34 73 32 30 28 26 19 18 17 15 14 10 8 5 3 2 1
SALEABLE	NOT APPLICABLE	34566-6563	9	C	BLUE	72 70 68 66 63 62 59 58 57 53 52 51 48 47 46 44 40 39 34 33 73 32 30 27 26 25 23 22 21 20 17 15 14 13 10 9 7 6 5 4 1
SALEABLE	NOT APPLICABLE	34566-6573	9	A	BLACK	72 71 70 69 67 64 63 60 59 58 57 56 55 54 53 52 51 50 49 47 45 44 43 42 41 40 39 37 36 34 73 32 30 28 26 23 21 19 18 16 15 14 12 10 8 5 3
SALEABLE	NOT APPLICABLE	34566-6583	9	A	BLACK	70 69 63 62 61 60 58 57 56 55 54 53 52 51 50 49 44 43 42 41 40 39 37 36 34 73 32 29 28 27 26 19 18 16 15 14 13 12 11 10 3
SALEABLE	NOT APPLICABLE	34566-6593	0	C	BLUE	69 67 64 62 60 57 55 54 52 51 50 48 46 45 44 42 37 35 34 33 73 32 28 27 26 20 19 18 17 16 15 14 13 12 11 10 9

molex

MX123 52/66/73/80-WAY RECEPTACLE ASSY SEALED PIN OUT SHEET

STATUS	GM PART #	HRNS CONN ASSY			TPA	GROMMET CAP
		MATERIAL/PART NUMBER	WIRE DRESS OPTION	KEY OPTION Fp	COLOR OPTION Fp	NUMBERS INDICATE CAVITIES OPEN FOR CIRCUITS Fp
SALEABLE	NOT APPLICABLE	34566-6613	0	A	BLACK	72 71 70 69 — — 66 — 64 63 — 61 60 — — 57 56 — 54 53 52 51 50 49 — — 46 45 44 43 — — 40 39 38 37 36 — 34 33 73 — 32 31 30 29 28 — 26 25 — 23 22 21 — — — — — 16 15 14 13 12 — — 9 — 7 6 5 — — 2 1
SALEABLE	NOT APPLICABLE	34566-6623	9	B	ST GRY	— — — — 68 67 — — 64 — — — — 59 58 — — — 54 — — — — — — — 46 45 — — — — — 39 38 — — — — — 73 — 32 — 30 29 28 27 — — — 23 22 — — — — 17 — 15 — 13 — 11 10 — — — 6 — — — — 1
SALEABLE	NOT APPLICABLE	34566-6633	9	C	BLUE	— — — 69 — 67 66 — 64 — 62 — 60 — — 57 — — 54 — 52 51 50 — 48 — 46 45 44 — 42 — — — — 37 — — 34 33 73 — — — — 28 27 26 — — — — — — — — — — 16 15 14 13 12 11 10 9 8 7 — — — — — —
SALEABLE	NOT APPLICABLE	34566-6643	9	C	BLUE	— 71 — — 68 67 — 65 64 63 — 61 60 — 58 57 — — 54 — 52 51 50 — 48 — — 45 — 43 — 41 — — 38 37 — — 34 33 73 — — — — 28 27 — 25 — — — — — — 18 — — 16 15 14 13 12 11 10 9 8 7 — — — — — —
SALEABLE	NOT APPLICABLE	34566-6653	9	B	ST GRY	72 — — — 68 — — — — — 62 61 60 59 — — — 55 — — 52 — — — 48 47 46 — 44 43 — 41 40 — 38 37 36 35 — — 73 — — — — — 30 — — — — — — — — 20 19 18 — — 16 — 14 — — — — — 8 — — 5 4 — — — 1
SALEABLE	NOT APPLICABLE	34566-6663	9	A	BLACK	72 71 70 69 68 — 66 65 64 63 — — 60 — — 57 56 — 54 — 52 51 50 49 48 — 46 45 44 43 42 — 40 39 38 37 36 — 34 — 73 — 32 31 30 29 28 — 26 25 — 23 22 21 20 — — — — — — 15 14 13 12 — — 9 — 7 6 5 4 — 2 —
SALEABLE	NOT APPLICABLE	34566-6673	9	B	ST GRY	72 71 70 69 68 67 66 65 64 63 — 61 60 59 — 57 56 55 — — 52 51 50 49 48 47 46 45 44 43 — 41 40 39 38 37 36 35 34 33 73 — 32 31 30 29 28 — 26 — 24 23 22 21 20 19 18 17 — 16 15 14 13 12 11 — 9 8 7 6 5 4 3 2 1
SALEABLE	NOT APPLICABLE	34566-6683	9	A	BLACK	72 — 70 — — 67 — — — 63 — — 60 59 58 57 — — — — 52 — — — 48 47 46 — — 43 42 — 40 39 38 37 — — — — 73 — 32 31 30 29 28 27 — — — — 22 21 — — — — — 16 15 14 13 12 11 — 9 — — — 6 — — — 2 1
SALEABLE	NOT APPLICABLE	34566-6693	9	C	BLUE	72 71 70 69 — 67 66 65 64 — — — — — — — 56 — 54 — 52 51 50 49 — 47 46 45 44 — — — — 39 38 — — — 34 — 73 — — 31 30 29 28 — 26 25 24 23 22 21 — — — 17 — 16 15 14 13 12 — — 9 8 7 6 5 — — — —
SALEABLE	TBD	34822-0063	9	A	BLACK	— 63 62 61 60 59 — — — — 54 53 — 51 — 49 66 — 47 — — — — — — — — 38 37 — 35 — 33 65 — — — — — — — 28 — — 25 — — 22 21 20 19 18 17 — — 15 14 13 — — — — 8 7 — — — 3 2 1
SALEABLE	NOT APPLICABLE	34566-6713	9	A	BLACK	72 71 70 69 68 — 66 65 64 63 — 61 60 — — 57 56 — 54 53 52 51 50 49 48 — 46 45 44 43 42 41 40 39 38 37 36 — 34 33 73 — 32 31 30 29 28 — 26 25 — 23 22 21 — — — — — — — 15 14 13 12 — — 9 — 7 6 5 — — 2 1
SALEABLE	NOT APPLICABLE	34566-6723	0	H	ST GRY	— 79 — — — — 74 73 — — — — — 67 — 65 64 63 62 61 — 59 — — — — — 53 52 — — — — — — — 44 43 42 41 — — 38 — — — — 33 — — — — — 27 — 25 — — — — — — 18 — — 15 14 13 12 — 10 9 8 7 — — — — —
SALEABLE	NOT APPLICABLE	34566-6733	0	G	BLUE	— — 78 77 — 75 74 — 72 — 70 — — — — 64 63 — — — 60 — 58 57 — 55 54 — 52 51 50 49 — 47 — 45 — — — — 40 39 38 37 — — — 33 32 31 — — — 27 26 — — — — — 20 19 18 17 — — — — — — 10 9 8 — 6 — 4 3 2 1
SALEABLE	NOT APPLICABLE	34566-6743	9	C	BLUE	— 71 — 69 68 67 — 65 64 63 — 61 60 — — 57 — — — — 52 51 50 — 48 — 46 45 — 43 — 41 — — — 37 — — 34 33 73 — — — — 28 27 — 25 — — — — — — — — — — 16 15 14 13 12 11 10 9 8 7 — — — — — —
SALEABLE	NOT APPLICABLE	34566-6753	9	A	BLACK	72 71 70 69 68 — 66 65 64 — — 61 60 — — 57 56 — 54 53 52 51 50 49 48 — 46 45 44 43 42 — 40 39 38 37 36 — 34 33 73 — 31 30 29 28 — — — — 23 22 21 20 — — — — — 15 14 13 12 — — — — 7 6 5 4 — 2 — —

MX123 52/66/73/80-WAY RECEPTACLE ASSY SEALED PIN OUT SHEET

STATUS	GM PART #	HRNS CONN ASSY			TPA	GROMMET CAP																	
		MATERIAL/PART NUMBER	WIRE DRESS OPTION	KEY OPTION Fp	COLOR OPTION Fp	NUMBERS INDICATE CAVITIES OPEN FOR CIRCUITS Fp																	
SALEABLE	NOT APPLICABLE	34566-6763	9	B	ST GRY	72				68						62	61					55		
						52		50	49			46	45		43			40					34	
						73							29							22	21	20	19	18	
										16		14						8		6	5	4			
SALEABLE	NOT APPLICABLE	34566-6773	0	C	BLUE	72		70		68		66				63	62			59	58	57			53
						52	51		49	48	47	46		44		42		40	39				34	33
						73				32		30				26	25			22	21		19	18	17
							15	14								10	9			6	5	4			1
SALEABLE	NOT APPLICABLE	34566-6783	0	B	ST GRY	72		70		68		66						60	59				55	54	53
						52		50		48		46			43			40	39				35	34	33
						73				32	31	30	29	28	27	26	25	24	23						17
										16						10		8	7					2	1
SALEABLE	NOT APPLICABLE	34566-6793	0	B	ST GRY	72		70		68		66		64	63			60	59				55	54	53
						52		50		48		46			43			40	39				35	34	33
						73				32	31	30	29	28	27	26	25	24	23			20			17
										16						10		8	7		5	4		2	1
SALEABLE	NOT APPLICABLE	34566-6813	9	A	BLACK		71	70	69	68	67		65	64	63	62	61	60		58	57	56	55	54	53
						52	51	50	49	48	47		45	44	43	42	41	40	39		37	36		34	
						73				32		30	29	28	27	26	25	24			21			18	
										16	15	14	13	12	11	10	9	8			5		3		
SALEABLE	NOT APPLICABLE	34566-6823	9	C	BLUE	72		70		68	67	66			63	62			59		57				53
						52	51		49	48	47	46		44			41	40	39		37	36	35	34	33
						73				32		30			27	26	25	24		22	21	20			
							15	14	13							10	9	8		6	5	4		2	
SALEABLE	NOT APPLICABLE	34566-6833	0	A	BLACK			70	69						63			60	59	58	57	56	55	54	53
						52	51		49	48	47			44	43	42	41	40			37	36		34	33
						73				32				28		26							19	18	
							16	15						12		10							3		
SALEABLE	NOT APPLICABLE	34566-6843	0	A	BLACK	72	71	70	69	68		66	65	64	63		61	60			57	56		54	53
						52	51	50	49	48		46	45	44	43			40	39	38	37	36		34	33
						73				32	31	30	29	28		26	25		23	22	21	20			17
							15	14	13	12							9		7	6	5	4		2	
SALEABLE	NOT APPLICABLE	34566-6853	0	C	BLUE				69		67	66		64		62	61	60			57		55	54	
						52	51	50	49	48		46	45	44		42	41				37		35	34	33
						73				32				28	27	26	25						19	18	17
										16	15	14	13	12	11	10	9	8	7						
SALEABLE	NOT APPLICABLE	34566-6863	0	A	BLACK	72	71	70	69	68		66	65	64	63		61	60			57	56		54	53
						52	51	50	49	48		46	45	44	43	42		40	39	38	37	36		34	33
						73				32	31	30	29	28		26	25		23	22	21	20			
							15	14	13	12							9		7	6	5	4		2	
SALEABLE	NOT APPLICABLE	34566-6873	9	B	ST GRY	72				68	67				63	62	61	60	59				55		53
						52				48	47	46		44	43		41	40		38	37	36	35		
						73						30			27							20	19	18	17
							16	15	14						11			8				4			1
SALEABLE	NOT APPLICABLE	34566-6883	9	A	BLACK	72		70			67				63			60	59	58	57	56	55		
						52	51			48	47	46			43	42		40	39	38	37	36	35		
						73								28	27					22	21			18	17
														12	11		9		7		5			2	1
SALEABLE	NOT APPLICABLE	34566-6893	0	B	ST GRY	72	71	70	69	68	67	66	65	64	63	62	61	60	59		57	56	55		
						52	51	50	49	48	47	46	45	44	43		41	40	39	38	37	36	35	34	33
						73				32	31	30	29	28		26		24	23	22	21	20	19	18	17
										16	15	14	13	12	11		9	8	7	6	5	4	3	2	1
SALEABLE	NOT APPLICABLE	34566-6913	9	A	BLACK	72	71	70	69	68	67	66	65	64	63			60	59	58	57	56	55	54	
						52	51	50	49	48	47	46	45	44	43	42		40	39	38	37	36	35	34	
						73				32	31	30	29	28	27	26	25		23	22	21	20		18	17
							16	15	14	13	12	11			9				7	6	5	4		2	1
SALEABLE	NOT APPLICABLE	34566-6923	9	C	BLUE	72	71	70	69		67	66	65	64			61	60		58	57	56		54	
						52	51	50	49	48	47	46	45	44			41		39	38	37			34	33
						73				32	31	30	29	28	27	26	25	24	23	22	21			18	17
										16	15	14	13	12	11	10	9	8	7	6	5				

molex

MX123 52/66/73/80-WAY RECEPTACLE ASSY SEALED PIN OUT SHEET

STATUS	GM PART #	HRNS CONN ASSY			TPA	GROMMET CAP																	
		MATERIAL/PART NUMBER	WIRE DRESS OPTION	KEY OPTION Fp	COLOR OPTION Fp	NUMBERS INDICATE CAVITIES OPEN FOR CIRCUITS Fp																	
SALEABLE	NOT APPLICABLE	34566-6933	9	B	ST GRY	72				68	67				63	62	61	60	59				55		53
						52				48	47	46		44	43		41	40		38	37	36	35		
						73						30			27					22	21	20	19	18	17
										16	15	14			11			8		6		4			1
SALEABLE	NOT APPLICABLE	34566-6943	9	A	BLACK	72	71	70	69	68		66	65	64	63		61	60			57	56		54	53
						52	51	50	49	48		46	45	44	43	42	41	40	39	38	37	36		34	33
						73				32	31	30	29	28					23	22	21				
											15	14	13	12					7	6	5			2	1
SALEABLE	NOT APPLICABLE	34566-6953	0	A	BLACK	72	71	70	69			66		64	63		61	60			57	56		54	53
						52	51	50	49			46	45	44	43			40	39	38	37	36		34	33
						73				32	31	30	29	28		26	25		23	22	21	20			
										16	15	14	13	12			9		7	6	5	4		2	1
SALEABLE	NOT APPLICABLE	34566-6963	0	B	ST GRY	72		70		68	67					62	61						55		
						52				48	47	46			43			40							
						73						30										20	19	18	
										16	15	14						8				4		2	
SALEABLE	NOT APPLICABLE	34566-6973	0	C	BLUE		71	70	69		67		65	64		62	61	60			57		55	54	
						52	51	50	49	48	47	46	45	44		42	41				37		35	34	33
						73				32				28	27	26	25						19	18	17
										16	15	14	13	12	11	10	9	8	7						
SALEABLE	NOT APPLICABLE	34566-6983	0	C	BLUE		71		69		67		65	64		62		60			57			54	
						52	51	50		48	47	46	45	44		42					37			34	33
						73								28	27	26								18	
										16	15	14	13	12	11	10	9	8	7						
SALEABLE	NOT APPLICABLE	34566-6993	0	G	BLUE			78	77	76									67	66	65				
						40	39	38	37	36	35	34	33	32			29	28			25				21
						20	19	18	17	16	15	14	13	12									3		1
SALEABLE	NOT APPLICABLE	34566-7013	9	A	BLACK		71	70	69					64	63	62	61	60	59	58	57	56	55	54	53
						52	51	50	49				45	44	43	42	41		39		37	36		34	
						73				32			29	28	27	26							19	18	
										16	15	14	13	12	11	10							3		
SALEABLE	NOT APPLICABLE	34566-7023	0	A	BLACK	72	71	70	69	68		66	65	64			61	60			57	56		54	53
						52	51	50	49	48		46	45	44	43			40	39	38	37	36		34	33
						73					31	30	29	28		26	25		23	22	21	20			
											15	14	13	12			9		7	6	5	4		2	
SALEABLE	NOT APPLICABLE	34566-7033	0	A	BLACK			70	69				65		63	62	61	60		58	57	56	55	54	53
						52	51		49					44	43	42	41				37	36		34	
						73				32			29	28	27	26					21		19	18	
										16	15		13	12	11	10		8			5		3		
SALEABLE	NOT APPLICABLE	34566-7043	0	B	ST GRY	72				68	67				63	62	61	60	59				55		
						52						46			43		41	40							
						73									27							20	19	18	
										16		14			11			8				4			
SALEABLE	NOT APPLICABLE	34566-7053	0	C	BLUE		71		69		67		65	64		62	61	60			57			54	
						52	51	50	49	48	47	46	45	44		42	41				37			34	33
						73								28	27	26	25								
										16	15	14	13	12	11	10	9	8	7						
SALEABLE	NOT APPLICABLE	34566-7063	0	C	BLUE	72		70		68	67	66			63	62			59		57				53
						52	51			48	47	46		44				40	39					34	33
						73				32		30				26	25			22	21				
											15	14	13			10	9			6	5	4			
SALEABLE	NOT APPLICABLE	34566-7073	9	F	NATURAL				69	68											58	57			
															43	42					38	37			33
						73						30											19	18	17
																							3	2	1
SALEABLE	NOT APPLICABLE	34566-7083	9	B	ST GRY																				
						73																			
										16	15	14	13	12	11	10		8	7				3	2	1

molex

MX123 52/66/73/80-WAY RECEPTACLE ASSY SEALED PIN OUT SHEET

STATUS	GM PART #	HRNS CONN ASSY			TPA	GROMMET CAP
		MATERIAL/PART NUMBER	WIRE DRESS OPTION	KEY OPTION Fp	COLOR OPTION Fp	NUMBERS INDICATE CAVITIES OPEN FOR CIRCUITS Fp
SALEABLE	NOT APPLICABLE	34566-7093	9	B	ST GRY	72 71 70 69 68 67 66 65 64 63 59 53 52 51 50 49 48 47 46 45 44 43 39 34 33 73 32 31 30 29 28 27 26 25 24 23 17 16 15 14 13 12 11 10 8 7 3 2 1
SALEABLE	NOT APPLICABLE	34566-7113	9	G	BLUE	80 79 78 76 71 67 60 59 58 57 54 51 50 49 48 47 44 41 40 39 37 33 32 30 29 28 27 25 24 20 19 18 12 11 9 8 5 3 2
SALEABLE	NOT APPLICABLE	34566-7123	9	G	BLUE	80 79 78 71 67 60 59 58 57 54 51 50 49 48 47 44 41 40 39 33 32 30 29 28 27 25 24 20 19 18 12 11 9 8 5 3 2
SALEABLE	NOT APPLICABLE	34566-7133	9	B	ST GRY	58 54 53 42 73 27 25 10
SALEABLE	NOT APPLICABLE	34566-7143	0	A	BLACK	70 69 63 60 59 58 57 56 55 54 53 52 51 49 48 47 44 43 42 41 37 36 34 33 73 32 28 26 19 18 16 15 12 10 3
SALEABLE	NOT APPLICABLE	34566-7153	0	C	BLUE	72 70 68 66 63 62 59 58 57 53 52 51 49 48 47 46 44 42 40 39 37 36 34 33 73 32 30 26 25 24 22 21 19 18 17 15 14 10 9 8 6 5 4 2 1
SALEABLE	NOT APPLICABLE	34566-7163	0	A	BLACK	72 70 69 68 67 61 60 56 55 54 53 52 50 49 48 47 45 44 43 41 40 35 34 33 73 29 28 25 24 20 19 18 17 16 15 11 9 8 7 6 5 4 3 2 1
SALEABLE	NOT APPLICABLE	34566-7173	0	B	ST GRY	68 67 66 65 64 63 58 55 46 45 43 38 34 73 32 30 29 28 27 22 17 16 10
SALEABLE	NOT APPLICABLE	34566-7183	0	B	ST GRY	72 71 70 69 68 67 66 65 64 63 62 61 60 59 58 57 56 55 54 53 52 51 50 49 48 47 46 45 44 43 42 41 40 39 38 37 36 35 34 33 73 32 31 30 29 28 27 26 25 24 22 21 20 19 18 17 16 15 14 13 12 11 10 9 8 7 6 5 4 3 2 1
SALEABLE	NOT APPLICABLE	34566-7193	0	A	BLACK	72 70 69 63 62 61 60 58 57 56 55 54 53 52 51 49 44 43 42 41 37 36 34 73 32 29 28 27 26 19 18 17 16 15 13 12 11 10 3 2 1
SALEABLE	NOT APPLICABLE	34566-7213	0	A	BLACK	70 69 63 58 56 54 52 51 49 47 44 43 42 41 39 36 34 73 32 28 26 19 18 17 16 12 10 3 2 1
SALEABLE	NOT APPLICABLE	34566-7223	0	C	BLUE	72 70 68 66 63 62 59 57 53 52 51 48 47 46 44 42 40 39 37 36 34 33 73 32 30 26 25 24 22 21 20 15 14 13 10 9 8 6 5 4 2
SALEABLE	NOT APPLICABLE	34566-7233	9	A	BLACK	72 62 61 57 56 55 54 52 51 46 45 43 40 37 35 34 73 32 30 29 25 20 16 15 13 11 10 9 4
SALEABLE	NOT APPLICABLE	34566-7243	9	A	BLACK	72 62 61 58 57 56 55 54 52 51 48 46 45 43 41 40 37 35 34 73 32 30 29 25 20 16 15 13 11 10 9 4 3
SALEABLE	TBD	34822-0073	0	A	BLACK	63 62 61 60 59 54 53 51 49 66 47 38 37 35 33 65 28 25 22 21 20 19 18 17 15 14 13 8 7 3 2 1

MX123 52/66/73/80-WAY RECEPTACLE ASSY SEALED PIN OUT SHEET

STATUS	GM PART #	HRNS CONN ASSY			TPA	GROMMET CAP
		MATERIAL/PART NUMBER	WIRE DRESS OPTION	KEY OPTION Fp	COLOR OPTION Fp	NUMBERS INDICATE CAVITIES OPEN FOR CIRCUITS Fp
SALEABLE	TBD	34822-0083	9	A	BLACK	63 62 61 60 59 54 53 51 49 66 47 39 38 37 35 33 65 28 25 22 21 20 19 18 17 15 14 13 8 7 3 2 1
SALEABLE	NOT APPLICABLE	34566-7253	0	B	ST GRY	72 62 61 52 48 47 46 44 43 41 40 73 30 20 19 18 16 14 4
SALEABLE	NOT APPLICABLE	34566-7263	0	C	BLUE	69 67 66 64 62 60 57 54 52 51 50 48 46 45 44 42 37 34 33 73 28 27 26 18 16 15 14 13 12 11 10 9 8 7
SALEABLE	NOT APPLICABLE	34566-7273	0	C	BLUE	69 67 66 64 62 60 57 55 54 52 51 50 48 46 45 44 42 37 35 34 33 73 32 28 27 26 19 18 17 16 15 14 13 12 11 10 9 8 7
SALEABLE	NOT APPLICABLE	34566-7283	0	C	BLUE	69 67 66 64 61 60 57 54 52 51 50 49 48 46 45 44 41 37 34 33 73 28 27 25 18 16 15 14 13 12 11 10 9 8 7
SALEABLE	NOT APPLICABLE	34566-7293	9	A	BLACK	72 71 70 69 68 67 66 65 64 63 59 53 52 51 50 49 48 47 46 45 44 43 39 34 33 73 32 31 30 29 28 27 26 25 24 23 17 16 15 14 13 12 11 10 8 7 3 2 1
SALEABLE	NOT APPLICABLE	34566-7313	0	B	ST GRY	72 67 62 61 55 52 48 47 46 43 40 73 30 22 21 20 19 18 16 14 6 4
SALEABLE	NOT APPLICABLE	34566-7333	9	B	ST GRY	72 71 70 69 68 67 66 65 64 63 62 61 60 59 57 56 55 52 51 50 49 48 47 46 45 44 43 41 40 39 38 37 36 35 34 33 73 32 31 30 29 28 26 24 23 22 21 20 19 18 17 16 15 14 13 12 9 8 7 6 5 4 3 2 1
SALEABLE	NOT APPLICABLE	34566-7343	9	B	ST GRY	68 67 64 63 59 58 55 54 46 45 44 43 39 38 35 73 32 30 29 28 27 23 22 19 17 15 13 12 10 9 6 4 1
SALEABLE	NOT APPLICABLE	34566-7353	9	C	BLUE	69 67 66 64 62 60 57 55 54 52 51 50 48 47 46 45 44 42 37 35 34 33 73 32 28 27 26 19 18 17 16 15 14 13 12 11 10 9 8 7
SALEABLE	NOT APPLICABLE	34566-7363	0	B	ST GRY	72 70 68 62 61 60 59 55 52 46 44 43 41 40 73 20 19 18 17 16 15 14 8 4
SALEABLE	NOT APPLICABLE	34566-7373	0	A	BLACK	72 71 70 69 68 66 65 64 61 60 57 56 54 53 52 51 50 49 48 46 45 44 43 42 40 39 38 37 36 34 33 73 31 30 29 28 26 25 23 22 21 20 15 14 13 12 9 7 6 5 4 2
SALEABLE	NOT APPLICABLE	34566-7383	0	C	BLUE	71 70 67 66 65 64 61 60 57 54 52 51 50 49 48 47 45 44 41 37 34 33 73 32 28 27 25 17 16 15 14 13 12 11 10 9 8 7
SALEABLE	NOT APPLICABLE	34566-7393	0	B	ST GRY	72 62 61 55 52 48 47 46 44 43 40 73 20 19 18 16 15 14 4
SALEABLE	NOT APPLICABLE	34566-7413	0	A	BLACK	72 71 70 69 68 66 65 64 63 61 60 57 56 54 53 51 50 49 48 46 45 44 43 42 40 39 38 37 36 34 33 73 32 31 30 29 28 26 25 23 22 21 20 15 14 13 12 9 7 6 5 4 2

MX123 52/66/73/80-WAY RECEPTACLE ASSY SEALED PIN OUT SHEET

STATUS	GM PART #	HRNS CONN ASSY			TPA	GROMMET CAP
		MATERIAL/PART NUMBER	WIRE DRESS OPTION	KEY OPTION Fp	COLOR OPTION Fp	NUMBERS INDICATE CAVITIES OPEN FOR CIRCUITS Fp
SALEABLE	NOT APPLICABLE	34566-7423	0	C	BLUE	73: 72 71 70 69 68 67 66 65 64 63 62 61 60 59 58 57 56 55 54 53 / 52 51 50 49 48 47 46 45 44 43 42 41 40 39 38 37 36 35 34 33 / 32 31 30 29 28 27 26 25 24 23 22 21 20 19 18 17 / 16 15 14 13 12 11 10 9 8 7 6 5 4 3 2 1
SALEABLE	NOT APPLICABLE	34566-7433	0	B	ST GRY	73: 72 71 70 69 68 67 66 65 64 63 62 61 60 59 58 57 56 55 54 53 / 52 51 50 49 48 47 46 45 44 43 42 41 40 39 38 37 36 35 34 33 / 32 31 30 29 28 27 26 25 24 23 22 21 20 19 18 17 / 16 15 14 13 12 11 10 9 8 7 6 5 4 3 2 1
SALEABLE	NOT APPLICABLE	34566-7443	0	A	BLACK	73: 72 71 70 69 68 67 66 65 64 63 62 61 60 59 58 57 56 55 54 53 / 52 51 50 49 48 47 46 45 44 43 42 41 40 39 38 37 36 35 34 33 / 32 31 30 29 28 27 26 25 24 23 22 21 20 19 18 17 / 16 15 14 13 12 11 10 9 8 7 6 5 4 3 2 1
SALEABLE	NOT APPLICABLE	34566-7453	0	C	BLUE	73: 72 71 70 69 68 67 66 65 64 63 62 61 60 59 58 57 56 55 54 53 / 52 51 50 49 48 47 46 45 44 43 42 41 40 39 38 37 36 35 34 33 / 32 31 30 29 28 27 26 25 24 23 22 21 20 19 18 17 / 16 15 14 13 12 11 10 9 8 7 6 5 4 3 2 1
SALEABLE	NOT APPLICABLE	34566-7463	0	B	ST GRY	73: 72 71 70 69 68 67 66 65 64 63 62 61 60 59 58 57 56 55 54 53 / 52 51 50 49 48 47 46 45 44 43 42 41 40 39 38 37 36 35 34 33 / 32 31 30 29 28 27 26 25 24 23 22 21 20 19 18 17 / 16 15 14 13 12 11 10 9 8 7 6 5 4 3 2 1
SALEABLE	NOT APPLICABLE	34566-7473	0	B	ST GRY	73: 72 71 70 69 68 67 66 65 64 63 62 61 60 59 58 57 56 55 54 53 / 52 51 50 49 48 47 46 45 44 43 42 41 40 39 38 37 36 35 34 33 / 32 31 30 29 28 27 26 25 24 23 22 21 20 19 18 17 / 16 15 14 13 12 11 10 9 8 7 6 5 4 3 2 1
SALEABLE	NOT APPLICABLE	34566-7483	0	B	ST GRY	73: 72 71 70 69 68 67 66 65 64 63 62 61 60 59 58 57 56 55 54 53 / 52 51 50 49 48 47 46 45 44 43 42 41 40 39 38 37 36 35 34 33 / 32 31 30 29 28 27 26 25 24 23 22 21 20 19 18 17 / 16 15 14 13 12 11 10 9 8 7 6 5 4 3 2 1
SALEABLE	NOT APPLICABLE	34566-7493	0	C	BLUE	73: 72 71 70 69 68 67 66 65 64 63 62 61 60 59 58 57 56 55 54 53 / 52 51 50 49 48 47 46 45 44 43 42 41 40 39 38 37 36 35 34 33 / 32 31 30 29 28 27 26 25 24 23 22 21 20 19 18 17 / 16 15 14 13 12 11 10 9 8 7 6 5 4 3 2 1
SALEABLE	NOT APPLICABLE	34566-7513	9	A	BLACK	73: 72 71 70 69 68 67 66 65 64 63 62 61 60 59 58 57 56 55 54 53 / 52 51 50 49 48 47 46 45 44 43 42 41 40 39 38 37 36 35 34 33 / 32 31 30 29 28 27 26 25 24 23 22 21 20 19 18 17 / 16 15 14 13 12 11 10 9 8 7 6 5 4 3 2 1
SALEABLE	NOT APPLICABLE	34566-7523	0	A	BLACK	73: 72 71 70 69 68 67 66 65 64 63 62 61 60 59 58 57 56 55 54 53 / 52 51 50 49 48 47 46 45 44 43 42 41 40 39 38 37 36 35 34 33 / 32 31 30 29 28 27 26 25 24 23 22 21 20 19 18 17 / 16 15 14 13 12 11 10 9 8 7 6 5 4 3 2 1
SALEABLE	NOT APPLICABLE	34566-7533	0	G	BLUE	73: 80 79 78 71 70 67 / 60 59 58 57 54 51 50 49 48 47 45 44 42 41 / 40 39 37 36 35 34 33 32 30 29 28 27 25 24 23 22 21 / 20 19 18 13 12 11 9 8 5 3 2 1
~~SALEABLE~~	~~NOT APPLICABLE~~	34566-7543 SAME AS P/N 34566-1553	0	A	BLACK	73
~~SALEABLE~~	~~NOT APPLICABLE~~	34566-7553 SAME AS P/N 34566-1983	0	B	ST GRY	73
~~SALEABLE~~	~~NOT APPLICABLE~~	34566-7563 SAME AS P/N 34566-1993	0	C	BLUE	73
SALEABLE	NOT APPLICABLE	34566-7573	0	B	ST GRY	73: 72 70 68 67 66 65 64 63 62 61 60 59 58 57 56 55 54 53 / 52 48 47 46 43 41 40 39 38 37 36 35 34 33 / 32 30 29 28 27 26 25 24 23 22 21 20 19 18 17 / 16 15 14 13 12 11 10 9 8 7 6 5 4 3 2 1

MX123 52/66/73/80-WAY RECEPTACLE ASSY SEALED PIN OUT SHEET

STATUS	GM PART #	HRNS CONN ASSY			TPA	GROMMET CAP
		MATERIAL/PART NUMBER	WIRE DRESS OPTION	KEY OPTION Fp	COLOR OPTION Fp	NUMBERS INDICATE CAVITIES OPEN FOR CIRCUITS Fp
SALEABLE	NOT APPLICABLE	34566-7583	9	A	BLACK	72 70 67 63 60 58 57 52 48 47 46 43 42 40 39 38 37 73 32 31 30 29 28 27 22 21 16 15 14 13 12 11 9 7 2 1
SALEABLE	NOT APPLICABLE	34566-7593	9	A	BLACK	72 70 69 68 64 62 61 59 58 57 56 55 54 53 52 51 50 48 47 46 45 43 41 40 37 35 33 73 32 30 29 27 26 25 24 20 19 18 16 15 14 13 12 11 10 9 8 5 4 3 2 1
SALEABLE	TBD	34822-0093	9	A	BLACK	63 62 61 60 59 54 53 51 49 66 47 38 37 35 33 65 28 25 22 21 20 19 18 17 15 14 13 8 7 3 2 1
SALEABLE	TBD	34822-0103	0	A	BLACK	63 58 57 56 55 54 53 51 49 66 47 41 40 38 37 35 33 65 28 27 26 25 22 18 17 14 7 4 3 2 1
SALEABLE	TBD	34822-0113	9	A	BLACK	61 60 59 58 56 55 51 49 66 42 65 17 10 8 2
SALEABLE	NOT APPLICABLE	34822-0123	9	C	BLUE	64 63 62 61 60 55 54 66 48 47 46 45 42 39 36 35 65 31 27 19 16 10 6 4 1
SALEABLE	NOT APPLICABLE	34566-7613	9	H	ST GRY	80 79 78 75 71 70 67 60 59 57 54 51 50 49 48 47 45 44 42 41 40 39 37 36 34 33 32 30 29 28 27 25 24 23 22 21 20 18 13 12 11 9 8 5 3 2 1
SALEABLE	NOT APPLICABLE	34566-7623	9	G	BLUE	80 79 78 75 71 70 67 60 59 58 57 54 51 50 49 48 47 45 44 42 41 40 39 37 36 34 33 32 30 29 28 27 25 24 23 22 21 20 19 18 13 12 11 9 8 5 3 2 1
SALEABLE	TBD	34822-0133	0	C	BLUE	64 63 62 61 60 55 54 66 48 47 46 45 42 39 36 35 65 31 27 19 16 10 6 4 1
SALEABLE	NOT APPLICABLE	34566-7633	9	A	BLACK	72 71 70 69 68 67 66 65 64 63 60 59 58 57 56 55 54 52 51 50 49 48 47 46 45 44 43 42 41 40 39 38 37 36 35 34 73 32 31 30 29 28 27 26 25 23 22 21 20 18 17 16 15 14 13 12 11 9 7 6 5 4 2 1
SALEABLE	NOT APPLICABLE	34566-7643	9	B	ST GRY	68 67 64 59 58 46 45 39 38 73 32 30 29 28 27 23 22 17 10 7 1
SALEABLE	TBD	34822-0143	0	A	BLACK	61 60 59 58 56 55 51 49 66 42 65 32 17 16 10 8 2
SALEABLE	NOT APPLICABLE	34566-7653	0	B	ST GRY	72 70 62 61 55 52 48 47 46 43 40 73 30 22 21 20 19 18 16 15 14 6 4 2
SALEABLE	NOT APPLICABLE	34566-7663	0	B	ST GRY	72 70 68 62 61 60 59 55 52 48 47 46 44 43 41 40 38 37 36 35 33 73 30 22 21 20 19 18 17 16 15 14 8 6 4 1
SALEABLE	NOT APPLICABLE	34566-7673	0	C	BLUE	71 70 69 67 66 65 64 61 60 59 58 57 54 52 51 50 49 48 47 46 45 44 41 39 38 37 34 33 73 32 28 27 25 23 18 17 16 15 14 13 12 11 10 9 8 7

MX123 52/66/73/80-WAY RECEPTACLE ASSY SEALED PIN OUT SHEET

STATUS	GM PART #	HRNS CONN ASSY			TPA	GROMMET CAP																	
		MATERIAL/PART NUMBER	WIRE DRESS OPTION	KEY OPTION Fp	COLOR OPTION Fp	NUMBERS INDICATE CAVITIES OPEN FOR CIRCUITS Fp																	
SALEABLE	NOT APPLICABLE	34566-7683	9	B	ST GRY	72	71	70	69	68	67	66	65	64	63	62	61	60	59		57	56	55		
						52	51	50	49	48	47	46	45	44	43		41	40	39	38	37	36	35	34	33
						73				32	31	30	29	28		26	25	24	23	22	21	20	19	18	17
										16	15	14	13	12	11		9	8	7	6	5	4	3	2	1
SALEABLE	NOT APPLICABLE	34566-7693	9	A	BLACK	72								64		62	61				57	56	55	54	
						52	51					46	45		43			40			37		35	34	
						73				32		30	29		27		25					20			
										16	15		13		11	10	9					4			
SALEABLE	NOT APPLICABLE	34566-7713	9	A	BLACK	72								64		62	61			58	57	56	55	54	
						52	51			48		46	45		43		41	40			37		35	34	
						73				32		30	29		27		25					20			
										16	15		13		11	10	9					4	3		
SALEABLE	NOT APPLICABLE	34566-7723	9	A	BLACK	72								64		62	61				57	56	55	54	53
						52	51					46	45		43			40			37				
						73				32		30	29		27		25					20			
										16	15		13		11	10	9					4			
SALEABLE	NOT APPLICABLE	34566-7733	9	A	BLACK	72								64		62	61			58	57	56	55	54	53
						52	51			48		46	45		43		41	40			37				
						73				32		30	29		27		25					20			
										16	15		13		11	10	9					4	3		
SALEABLE	NOT APPLICABLE	34566-7743	0	C	BLUE	72		70		68	67	66			63	62			59		57				53
						52	51		49	48	47	46		44			41	40	39		37	36	35	34	33
						73				32		30			27	26	25	24		22	21	20			
											15	14	13			10	9	8		6	5	4		2	
SALEABLE	NOT APPLICABLE	34566-7753	0	A	BLACK		71	70	69	68	67			64	63	62	61	60	59	58	57	56	55	54	53
						52	51	50	49				45	44	43	42	41		39	38	37	36		34	
						73				32	31		29	28	27	26	25						19	18	
										16	15	14	13	12	11	10	9	8					3		
SALEABLE	NOT APPLICABLE	34566-7763	0	F	NATURAL																				
						73																			
SALEABLE	NOT APPLICABLE	34566-7773	0	B	ST GRY	72		70			67				63	62	61	60	59						
						52						46			43		41	40							
						73									27					22	21	20	19	18	
										16		14			11					6		4			
SALEABLE	TBD	34822-0153	9	A	BLACK		63	62	61	60	59					54	53		51		49	66			
							47									38	37		35		33				
						65								28			25			22	21	20	19	18	17
											15	14	13					8	7			3	2	1
SALEABLE	NOT APPLICABLE	34566-7783	0	A	BLACK	72	71	70	69	68		66	65	64	63			60			57	56		54	
						52	51	50	49	48		46	45	44	43	42	41	40	39	38	37	36		34	
						73				32	31	30	29	28		26	25		23	22	21				
											15	14	13	12			9		7	6	5			2	1
SALEABLE	NOT APPLICABLE	34566-7793	0	A	BLACK	72		70			67	66	65		63			60	59	58	57	56	55		
						52	51		49	48	47	46	45		43	42		40	39	38	37	36	35		
						73								28	27				23	22	21			18	17
														12	11		9						2	1
SALEABLE	NOT APPLICABLE	34566-7813	0	A	BLACK			70	69	68	67				63	62	61	60	59	58	57	56	55	54	53
						52	51	50	49					44	43	42	41	40	39	38	37	36		34	
						73				32			29	28	27	26	25				21		19	18	
										16	15	14	13	12	11	10	9	8			5		3		
SALEABLE	NOT APPLICABLE	34566-7823	0	B	ST GRY	72				68	67				63	62	61	60	59						
						52				48	47	46		44	43		41	40		38	37	36	35		
						73						30			27							20	19	18	
										16		14			11			8				4			1
SALEABLE	NOT APPLICABLE	34566-7833	0	B	ST GRY	72	71	70	69	68	67	66	65	64	63		61	60	59		57	56	55		
						52	51	50	49	48	47	46	45	44	43		41	40	39	38	37	36	35	34	33
						73				32	31	30	29	28		26	25	24	23	22	21	20	19	18	17
										16	15	14	13	12				8	7	6	5	4	3	2	1

MX123 52/66/73/80-WAY RECEPTACLE ASSY SEALED PIN OUT SHEET

STATUS	GM PART #	HRNS CONN ASSY			TPA	GROMMET CAP																			
		MATERIAL/PART NUMBER	WIRE DRESS OPTION	KEY OPTION Fp	COLOR OPTION Fp	NUMBERS INDICATE CAVITIES OPEN FOR CIRCUITS Fp																			
SALEABLE	NOT APPLICABLE	34566-7843	9	C	BLUE		71				67		65	64		62	61	60		58	57			54	
						52	51	50	49	48	47		45	44		42	41			38	37			34	33
						73								28	27	26	25							18	
										16	15	14	13	12	11	10	9								
SALEABLE	NOT APPLICABLE	34566-7853	9	C	BLUE	72	71	70	69		67	66		64										54	
						52	51	50	49		47	46		44					39	38					
						73						30	29	28	27	26	25	24	23	22	21				17
										16	15	14	13	12	11	10	9	8	7	6	5				
SALEABLE	NOT APPLICABLE	34566-7863	9	C	BLUE	72		70		68	67	66			63	62			59		57				53
						52	51			48	47	46		44				40	39		37	36	35	34	33
						73				32		30			27	26	25	24		22	21				
											15	14				10	9	8		6	5	4		2	
SALEABLE	NOT APPLICABLE	34566-7873	9	A	BLACK		71		69				65	64			61	60		58		56	55	54	
								50					45		43	42				38			35		
						73					31		29	28					23				19	18	17
										16				12	11								3		1
SALEABLE	NOT APPLICABLE	34566-7883	9	A	BLACK	72				68	67	66	65												
										48	47							40		38			35		33
						73					31	30					25	24	23	22	21	20	19		17
																	9	8	7	6	5	4		2	1
SALEABLE	NOT APPLICABLE	34566-7893	9	A	BLACK	72	71	70	69	68		66	65	64	63		61	60			57	56		54	53
						52	51	50	49	48		46	45	44	43	42		40	39	38	37	36		34	33
						73				32	31	30	29	28					23	22	21	20			
											15	14	13	12					7	6	5	4		2	
SALEABLE	TBD	34822-0163	0	A	BLACK	64	63									54	53		51		49	66			
																38	37		35		33				
						65								28					23		21	20	19	18	17
											15	14	13					8	7			4	3	2	1
SALEABLE	NOT APPLICABLE	34566-7913	9	G	BLUE	80	79	78			75				71	70			67						61
						60	59	58	57			54			51	50	49	48	47		45	44		42	41
						40	39		37	36		34	33	32		30	29	28	27		25	24	23	22	21
						20	19	18					13	12	11		9	8			5		3	2	1
SALEABLE	NOT APPLICABLE	34566-7923	0	C	BLUE		71	70			67			64			61	60			57			54	
						52	51	50	49	48	47		45	44			41				37			34	33
						73				32				28	27		25							18	17
										16	15	14	13	12	11	10	9	8	7						
SALEABLE	NOT APPLICABLE	34566-7933	0	A	BLACK	72	71	70	69	68		66	65	64	63		61	60			57	56		54	53
						52	51	50	49	48		46	45	44	43			40	39	38	37	36		34	33
						73				32	31	30	29	28					23	22	21	20			
											15	14	13	12					7	6	5	4		2	
SALEABLE	NOT APPLICABLE	34566-7943	0	B	ST GRY	72										62	61	60	59				55		
						52				48	47	46			43		41	40		38	37	36	35		
						73					31	30								22	21	20	19	18	17
										16	15	14								6		4			1
SALEABLE	NOT APPLICABLE	34566-7953	0	B	ST GRY	72										62	61	60	59				55		
						52				48	47	46			43		41	40		38	37	36	35		
						73					31	30								22	21	20	19	18	17
										16	15	14								6		4		2	
SALEABLE	NOT APPLICABLE	34566-7963	9	A	BLACK	72	71	70	69	68		66	65	64	63		61	60			57	56		54	53
						52	51	50	49	48		46	45	44	43	42		40	39	38	37	36		34	33
						73				32	31	30	29	28		26	25		23	22	21	20			
											15	14	13	12			9		7	6	5	4		2	
SALEABLE	NOT APPLICABLE	34566-7973	9	B	ST GRY	72										62	61	60	59				55		
						52		50	49	48	47	46	45		43		41	40		38	37	36	35	34	
						73						30	29							22	21	20	19	18	17
										16	15	14								6		4			1
SALEABLE	NOT APPLICABLE	34566-7983	9	B	ST GRY	72										62	61	60	59				55		
						52		50	49	48	47	46	45		43		41	40						34	33
						73						30	29							22	21	20	19	18	17
										16	15	14								6		4			

molex

MX123 52/66/73/80-WAY RECEPTACLE ASSY SEALED PIN OUT SHEET

STATUS	GM PART #	HRNS CONN ASSY			TPA	GROMMET CAP
		MATERIAL/PART NUMBER	WIRE DRESS OPTION	KEY OPTION Fp	COLOR OPTION Fp	NUMBERS INDICATE CAVITIES OPEN FOR CIRCUITS Fp
SALEABLE	NOT APPLICABLE	34566-7993	9	C	BLUE	70 69 67 66 64 61 60 57 54 52 51 50 49 48 47 46 45 44 41 37 34 33 73 32 28 27 25 18 17 16 15 14 13 12 11 10 9 8 7
SALEABLE	NOT APPLICABLE	34566-8013	9	C	BLUE	71 67 65 64 61 60 59 57 54 52 51 50 48 47 45 44 41 39 37 34 33 73 32 28 27 25 23 18 16 15 14 13 12 11 10 9 8 7
SALEABLE	TBD	34822-0173	9	A	BLACK	64 58 57 56 55 54 52 50 66 48 46 45 44 43 42 41 40 36 34 65 32 31 30 29 27 26 24 23 16 12 11 10 9 6 5 4
SALEABLE	NOT APPLICABLE	34566-8023	9	C	BLUE	72 69 68 63 62 59 56 55 53 46 43 42 40 39 36 35 73 31 30 29 26 24 23 22 21 20 19 8 7 6 5 4 3 2 1
SALEABLE	NOT APPLICABLE	34566-8033	9	B	ST GRY	71 70 69 67 66 65 64 63 58 57 56 54 51 50 49 45 42 39 34 33 73 32 31 29 28 27 26 25 24 23 13 12 11 10 9 7 5 3 2
SALEABLE	NOT APPLICABLE	34566-8043	9	A	BLACK	67 62 61 59 58 55 53 47 42 35 33 73 27 26 25 24 20 19 18 17 16 11 10 9 8 4 3 1
SALEABLE	NOT APPLICABLE	34566-8053	9	A	BLACK	72 68 67 66 59 46 40 38 35 33 73 31 25 23 22 21 20 19 17 9 8 7 6 5 4 2 1
SALEABLE	NOT APPLICABLE	34566-8063	9	C	BLUE	71 69 65 64 61 60 58 56 55 54 50 45 43 42 38 35 73 31 29 28 23 19 18 17 16 12 11 7 3 1
SALEABLE	NOT APPLICABLE	34566-8073	9	B	ST GRY	69 65 64 63 49 45 44 43 73 23 22 21 20 19 12 11 9 7 6 5 4
SALEABLE	NOT APPLICABLE	34566-8083	9	B	ST GRY	62 59 58 54 53 42 39 73 27 10 9
SALEABLE	NOT APPLICABLE	34566-8093	9	A	BLACK	71 69 68 66 65 64 62 61 54 53 50 49 45 44 41 34 33 73 32 31 30 29 26 25 24 23 20 19 16 15 14 13 10 8 6 4 3
SALEABLE	NOT APPLICABLE	34566-8113	9	C	BLUE	68 63 62 61 60 59 58 57 55 53 48 43 42 41 40 37 36 35 33 73 32 27 24 20 19 18 11 10 8 5 4 3 2 1
SALEABLE	NOT APPLICABLE	34566-8123	0	G	BLUE	80 79 73 72 70 69 68 67 66 65 64 62 61 59 53 52 46 44 42 41 36 35 34 25 24 23 22 21 19 16 15 14
SALEABLE	NOT APPLICABLE	34566-8133	0	G	BLUE	80 79 78 77 75 72 71 70 69 68 66 60 59 58 57 56 55 53 51 50 49 48 47 46 45 44 40 39 37 36 35 34 32 31 30 29 28 26 24 23 22 21 19 18 17 11 4 3 1
SALEABLE	NOT APPLICABLE	34566-8143	0	G	BLUE	80 79 78 77 76 75 74 73 72 70 69 68 67 66 65 64 63 62 61 60 59 58 57 56 55 54 53 52 51 50 48 47 46 45 44 43 42 41 40 39 38 37 36 35 34 33 32 31 30 29 28 27 26 25 24 23 22 21 20 19 18 17 16 15 14 13 12 11 10 9 8 7 6 5 4 3 2 1

MX123 52/66/73/80-WAY RECEPTACLE ASSY SEALED PIN OUT SHEET

STATUS	GM PART #	HRNS CONN ASSY			TPA	GROMMET CAP																		
		MATERIAL/PART NUMBER	WIRE DRESS OPTION	KEY OPTION Fp	COLOR OPTION Fp	NUMBERS INDICATE CAVITIES OPEN FOR CIRCUITS Fp																		
SALEABLE	NOT APPLICABLE	34566-8153	0	C	BLUE	72	71	70	69	68	67	66	65	64	63	62	61	60	59	58	57	56	55		
						52	51	50								42	41						35	34	33
						73								28	27									18	
										16		14	13										3		
SALEABLE	NOT APPLICABLE	34566-8163	9	B	ST GRY					68	67			64	63				59	58			55	54	
											47	46	45	44	43				39	38			35		
						73				32	31	30	29	28	27				23	22			19		17
											15		13	12	11	10	9			6		4			1
SALEABLE	NOT APPLICABLE	34566-8173	0	B	ST GRY	72		70		68	67				63	62	61	60	59						
						52						46			43		41	40							
		73													27					22	21	20	19	18	
										16		14			11			8		6		4			
SALEABLE	NOT APPLICABLE	34566-8183	9	H	ST GRY										71										
																	49								
SALEABLE	NOT APPLICABLE	34566-8193	0	G	BLUE		79	78	77	76	75	74			71				67		65		63		
						60	59	58	57	56	55	54		52					47		45		43		
						40		38	37				33	32	31	30	29		27	26					
						20		18	17						11	10	9	8	7	6	5	4	3	2	1
SALEABLE	NOT APPLICABLE	34566-8213	0	H	ST GRY							74	73						67		65	64	63	62	61
													53	52								44	43	42	41
								38					33						27		25				
						20				16	15	14	13	12		10	9	8		6	5			2	
SALEABLE	NOT APPLICABLE	34566-8223	9	A	BLACK	72										62	61		59		57		55		
						52	51											40			37				
		73								32			29				25					20			
										16	15	14		12	11	10	9								
SALEABLE	NOT APPLICABLE	34566-8233	9	G	BLUE				77	76	75	74	73	72		70	69	68		66	65	64	63	62	61
										56	55		53	52						46	45		43	42	
								38	37	36	35	34			31					26			23	22	21
						20	19		17	16	15	14	13			10			7	6		4			1
SALEABLE	NOT APPLICABLE	34566-8243	9	G	BLUE				77		75	74	73	72		70	69	68		66	65	64	63	62	61
										56	55		53	52						46	45		43	42	
								38		36	35	34			31					26			23	22	21
						20	19		17	16	15	14	13			10			7	6		4			1
SALEABLE	NOT APPLICABLE	34566-8253	9	G	BLUE				77	76	75	74	73	72		70	69	68		66	65	64	63	62	61
										56	55		53	52						46	45		43	42	
								38	37	36	35	34			31					26			23	22	21
									17	16	15	14	13			10			7	6		4			1
SALEABLE	NOT APPLICABLE	34566-8263	9	G	BLUE				77		75	74	73	72		70	69	68		66	65	64	63	62	61
										56	55		53	52						46	45		43	42	
								38		36	35	34			31					26			23	22	21
									17	16	15	14	13			10			7	6		4			1
SALEABLE	NOT APPLICABLE	34566-8273	9	G	BLUE	80	79	78							71				67						
						60	59	58	57			54			51	50	49	48	47			44			41
						40	39						33	32		30	29	28	27		25	24			
								18						12	11		9	8			5		3	2	
SALEABLE	NOT APPLICABLE	34566-8283	9	G	BLUE	80	79	78		76					71				67						
						60	59	58	57			54			51	50	49	48	47			44			41
						40	39		37				33	32		30	29	28	27		25	24			
								18						12	11		9	8			5		3	2	
SALEABLE	NOT APPLICABLE	34566-8293	9	A	BLACK		71	70	69	68	67	66	65		63			60	59	58					
								50	49	48	47			44		42			39	38		36	35	34	33
		73									31			28		26		24	23	22	21		19	18	17
												14		12				8	7	6	5		3	2	1
SALEABLE	NOT APPLICABLE	34566-8313	9	A	BLACK		71	70	69		67	66	65		63			60	59	58					
								50	49	48	47			44		42	41		39	38		36	35	34	33
		73									31			28		26		24	23	22	21		19	18	17
														12				8	7	6			3	2	1

MX123 52/66/73/80-WAY RECEPTACLE ASSY SEALED PIN OUT SHEET

STATUS	GM PART #	HRNS CONN ASSY			TPA	GROMMET CAP
		MATERIAL/PART NUMBER	WIRE DRESS OPTION	KEY OPTION Fp	COLOR OPTION Fp	NUMBERS INDICATE CAVITIES OPEN FOR CIRCUITS Fp
SALEABLE	NOT APPLICABLE	34566-8323	9	A	BLACK	71 70 69 68 67 66 65 63 60 53 50 49 47 44 42 39 38 36 33 73 31 28 26 24 23 22 21 19 18 17 14 12 8 7 6 5 2 1
SALEABLE	NOT APPLICABLE	34566-8333	9	A	BLACK	71 70 69 68 67 66 65 63 60 58 53 50 49 48 47 44 42 41 39 38 36 33 73 31 28 26 24 23 22 21 19 18 17 14 12 8 7 6 5 3 2 1
SALEABLE	NOT APPLICABLE	34566-8343	9	A	BLACK	71 70 69 68 67 66 65 63 60 59 50 49 47 44 42 39 38 36 35 34 33 73 31 28 26 24 23 22 21 19 18 17 14 12 8 7 6 5 2 1
SALEABLE	NOT APPLICABLE	34566-8353	9	A	BLACK	72 64 62 61 57 56 55 54 53 52 51 46 45 43 41 40 37 73 32 30 29 27 25 20 16 15 13 11 10 9 4
SALEABLE	NOT APPLICABLE	34566-8363	9	A	BLACK	72 68 64 62 61 57 56 55 54 53 52 51 46 45 43 40 37 73 32 30 29 27 25 20 16 15 14 13 11 10 9 5 4
SALEABLE	NOT APPLICABLE	34566-8373	9	A	BLACK	72 64 62 61 59 58 57 56 55 54 52 51 48 46 45 43 41 40 37 35 34 73 32 30 29 27 25 20 16 15 13 11 10 9 4 3
SALEABLE	NOT APPLICABLE	34566-8383	9	A	BLACK	72 64 62 61 59 57 56 55 54 52 51 46 45 43 40 37 35 34 73 32 30 29 27 25 20 16 15 13 11 10 9 4
SALEABLE	NOT APPLICABLE	34566-8393	0	A	BLACK	72 70 63 62 56 55 54 53 52 51 49 48 43 36 35 34 33 73 31 30 29 28 27 24 23 22 21 20 19 18 17 16 15 14 13 12 10 9 8 7 6 3 2 1
SALEABLE	NOT APPLICABLE	34566-8413	0	A	BLACK	72 70 63 62 56 55 54 53 52 51 49 48 43 36 35 34 33 73 31 30 29 28 27 24 23 22 21 20 19 18 17 16 15 14 12 10 9 8 7 6 3 2 1
SALEABLE	NOT APPLICABLE	34566-8423	0	C	BLUE	69 67 64 62 61 60 57 54 52 51 50 49 48 46 45 44 42 41 37 34 33 73 28 27 26 25 16 15 14 13 12 11 10 9 8 7
SALEABLE	NOT APPLICABLE	34566-8433	0	H	ST GRY	79 78 77 76 75 74 73 69 61 20 9 5 1
SALEABLE	NOT APPLICABLE	34566-8443	0	C	BLUE	71 70 67 66 65 64 61 60 59 58 57 54 52 51 50 48 47 45 44 41 39 38 37 34 33 73 32 28 27 25 23 18 17 16 15 14 13 12 11 10 9 8 7 6 5
SALEABLE	NOT APPLICABLE	34566-8453	0	A	BLACK	72 71 70 69 68 66 65 64 63 60 57 56 54 52 51 50 49 48 46 45 44 43 42 40 39 38 37 36 34 73 32 31 30 29 28 23 22 21 20 15 14 13 12 7 6 5 4 2
SALEABLE	NOT APPLICABLE	34566-8463	0	B	ST GRY	72 70 68 62 61 60 59 55 52 48 47 46 44 43 41 40 38 37 36 35 73 30 22 21 20 19 18 16 15 14 8 6 4 1
SALEABLE	NOT APPLICABLE	34566-8473	0	C	BLUE	71 70 67 66 65 64 62 61 60 58 57 55 54 52 51 50 49 48 47 45 44 42 41 38 37 35 34 33 73 32 28 27 26 25 19 18 17 16 15 14 13 12 11 10 9 8 7 6 5

molex

MX123 52/66/73/80-WAY RECEPTACLE ASSY SEALED PIN OUT SHEET

STATUS	GM PART #	HRNS CONN ASSY			TPA	GROMMET CAP
		MATERIAL/PART NUMBER	WIRE DRESS OPTION	KEY OPTION Fp	COLOR OPTION Fp	NUMBERS INDICATE CAVITIES OPEN FOR CIRCUITS Fp
SALEABLE	NOT APPLICABLE	34566-8483	0	A	BLACK	72 71 70 69 68 66 65 64 63 61 60 57 56 54 53 52 51 50 49 48 46 45 44 43 42 40 39 38 37 36 34 33 73 32 31 30 29 28 23 22 21 20 15 14 13 12 7 6 5 4 2
SALEABLE	NOT APPLICABLE	34566-8493	0	B	ST GRY	72 70 68 67 62 61 60 59 55 52 48 47 46 44 43 40 33 73 30 22 21 20 19 18 17 16 15 14 8 6 4
SALEABLE	NOT APPLICABLE	34566-8513	9	A	BLACK	72 71 70 69 68 66 65 64 63 61 60 57 56 54 53 52 51 50 49 48 46 45 44 43 40 39 38 37 36 34 33 73 32 31 30 29 28 24 23 22 15 14 13 12 7 6 5 2
SALEABLE	NOT APPLICABLE	34566-8523	9	B	ST GRY	72 70 68 62 61 55 52 48 47 46 43 40 73 30 22 21 20 19 18 17 16 15 14 8 6 4 2
SALEABLE	NOT APPLICABLE	34566-8533	9	C	BLUE	70 67 66 65 64 61 60 57 54 52 51 50 49 48 47 45 44 41 37 34 33 73 32 28 27 25 18 17 16 15 14 13 12 11 10
SALEABLE	NOT APPLICABLE	34566-8543	9	C	BLUE	71 69 67 66 65 64 60 57 54 52 51 50 49 48 47 46 45 44 37 34 33 73 32 28 27 16 15 14 13 12 11 10 9 8 7
SALEABLE	NOT APPLICABLE	34566-8553	0	B	ST GRY	72 68 62 61 60 59 55 52 46 43 41 40 73 22 21 20 16 15 14 8 6 4
SALEABLE	NOT APPLICABLE	34566-8563	0	A	BLACK	72 70 67 63 60 59 58 57 56 55 52 51 48 47 46 43 42 40 39 38 37 36 35 73 28 22 21 18 17 12 11 9 7 2 1
SALEABLE	NOT APPLICABLE	34566-8573	0	B	ST GRY	72 71 70 69 68 67 66 65 64 63 61 60 59 57 56 55 52 51 50 49 48 47 46 45 44 43 41 40 39 38 37 36 35 33 73 32 31 30 29 28 26 24 23 22 21 20 19 16 15 14 13 12 9 8 7 6 5 4 3
SALEABLE	NOT APPLICABLE	34566-8583	0	C	BLUE	72 71 70 69 67 66 65 64 60 56 54 52 51 50 49 47 46 45 44 40 39 38 34 73 31 30 28 26 25 24 23 22 21 17 16 15 14 13 12 9 8 7 6 5
SALEABLE	NOT APPLICABLE	34566-8593	0	B	ST GRY	72 68 62 61 60 59 55 52 48 47 46 43 41 40 38 37 36 35 73 30 22 21 20 19 18 16 15 14 8 6 4 1
SALEABLE	TBD	34822-0183	0	A	BLACK	64 63 62 61 60 59 54 53 51 49 66 38 37 35 33 65 24 23 22 21 20 19 18 17 15 14 13 8 7 4 3 2 1
SALEABLE	TBD	34822-0193	0	A	BLACK	64 63 54 53 51 49 66 38 37 35 33 65 28 24 23 21 20 19 18 17 15 14 13 8 7 4 3 2 1
SALEABLE	TBD	34822-0203	0	A	BLACK	64 63 62 61 60 59 54 53 51 49 66 38 37 35 33 65 31 28 24 23 22 21 20 19 18 17 15 14 13 8 7 4 2 1
SALEABLE	TBD	34822-0213	0	A	BLACK	64 63 62 61 60 59 54 53 51 49 66 38 37 35 33 65 31 24 23 22 21 20 19 18 17 15 14 13 8 7 4 3 2 1

MX123 52/66/73/80-WAY RECEPTACLE ASSY SEALED PIN OUT SHEET

STATUS	GM PART #	HRNS CONN ASSY			TPA	GROMMET CAP
		MATERIAL/PART NUMBER	WIRE DRESS OPTION	KEY OPTION Fp	COLOR OPTION Fp	NUMBERS INDICATE CAVITIES OPEN FOR CIRCUITS Fp
SALEABLE	NOT APPLICABLE	34566-8613	0	C	BLUE	73
SALEABLE	NOT APPLICABLE	34566-8623	9	C	BLUE	73
SALEABLE	NOT APPLICABLE	34566-8633	0	B	ST GRY	73
SALEABLE	NOT APPLICABLE	34566-8643	0	C	BLUE	73
SALEABLE	NOT APPLICABLE	34566-8653	9	C	BLUE	73
SALEABLE	NOT APPLICABLE	34566-8663	0	B	ST GRY	73
SALEABLE	NOT APPLICABLE	34822-0223	0	A	BLACK	65
SALEABLE	NOT APPLICABLE	34566-8673	0	F	NATURAL	73
SALEABLE	NOT APPLICABLE	34566-8683	0	B	ST GRY	73
SALEABLE	NOT APPLICABLE	34566-8693	0	A	BLACK	73
SALEABLE	NOT APPLICABLE	34566-8713	9	B	ST GRY	73
SALEABLE	NOT APPLICABLE	34566-8723	0	C	BLUE	73
SALEABLE	NOT APPLICABLE	34566-8733	0	A	BLACK	73
SALEABLE	NOT APPLICABLE	34566-8743	0	C	BLUE	73
SALEABLE	NOT APPLICABLE	34566-8753	0	B	ST GRY	73

MX123 52/66/73/80-WAY RECEPTACLE ASSY SEALED PIN OUT SHEET

STATUS	GM PART #	HRNS CONN ASSY			TPA	GROMMET CAP
		MATERIAL/PART NUMBER	WIRE DRESS OPTION	KEY OPTION Fp	COLOR OPTION Fp	NUMBERS INDICATE CAVITIES OPEN FOR CIRCUITS Fp
SALEABLE	NOT APPLICABLE	34566-8763	0	A	BLACK	72 71 70 67 66 59 58 57 56 55 54 53 52 51 50 47 46 39 37 36 35 33 73 32 31 30 29 28 27 26 21 18 17 16 15 14 13 12 11 10 8 7 3 2 1
SALEABLE	12672857	34822-0243	9	A	BLACK	64 63 62 61 60 59 54 53 51 49 47 38 37 35 33 65 28 25 24 22 21 20 19 18 17 15 14 13 12 8 7 4 3 2 1
SALEABLE	NOT APPLICABLE	34822-0253	0	A	BLACK	63 62 61 60 59 54 53 51 49 38 37 35 33 65 31 28 24 23 22 21 20 19 18 17 15 14 13 8 7 4 3 2 1
SALEABLE	NOT APPLICABLE	34822-0263	9	C	BLUE	64 63 62 60 59 57 56 55 54 53 52 51 50 49 48 47 46 45 42 39 37 36 35 34 33 65 32 30 29 28 27 26 25 24 23 22 21 19 18 17 16 15 14 13 12 11 10 9 8 7 6 3 2 1
SALEABLE	NOT APPLICABLE	34822-0273	9	A	BLACK	64 63 54 53 51 49 47 38 37 35 33 65 28 22 20 19 18 17 15 14 13 12 8 7 4 3 2 1
SALEABLE	NOT APPLICABLE	34822-0283	0	A	BLACK	61 60 59 58 56 55 51 49 42 65 32 17 16 8 2
SALEABLE	NOT APPLICABLE	34822-0293	0	A	BLACK	64 63 54 53 51 49 47 38 37 35 33 65 28 22 20 19 18 17 15 14 13 12 8 7 4 3 2 1
SALEABLE	NOT APPLICABLE	34566-8773	9	B	ST GRY	72 70 68 62 61 60 59 55 52 48 47 46 43 41 40 73 30 22 21 20 19 18 17 16 15 14 8 6 4 2
SALEABLE	NOT APPLICABLE	34566-8783	9	A	BLACK	72 71 70 69 68 66 65 64 63 61 60 57 56 54 53 52 51 50 49 48 46 45 44 43 40 39 38 37 36 34 33 73 32 31 30 29 28 23 22 21 15 14 13 12 7 6 5 2
SALEABLE	NOT APPLICABLE	34566-8793	9	C	BLUE	71 70 67 66 65 61 60 57 54 52 51 50 49 48 47 45 44 41 37 34 33 73 32 28 27 25 18 17 16 15 14 13 12 11 10 9 8 7
SALEABLE	NOT APPLICABLE	34566-8813	9	B	ST GRY	72 71 70 69 68 67 65 64 63 61 60 59 57 56 55 54 53 52 51 50 49 48 47 46 45 44 43 42 40 39 36 35 34 33 73 32 31 30 29 28 27 26 25 24 23 22 21 16 15 14 13 12 11 10 9 8 7 6 4 3 2
SALEABLE	NOT APPLICABLE	34566-8823	9	C	BLUE	72 71 70 69 67 66 64 60 54 53 52 51 50 49 47 46 44 40 39 73 30 29 28 27 26 25 24 23 22 21 17 16 15 14 13 12 11 10 9 8 7 6 5
SALEABLE	NOT APPLICABLE	34566-8833	9	C	BLUE	72 70 68 67 66 63 62 59 57 54 53 52 51 49 48 47 46 44 41 40 39 37 36 35 34 33 73 32 30 27 26 25 24 22 21 20 17 15 14 13 10 9 8 7 6 5 4 2 1
SALEABLE	NOT APPLICABLE	34566-8843	0	C	BLUE	72 71 70 69 67 66 64 54 52 51 50 49 47 46 44 41 39 38 73 30 29 28 27 26 25 24 23 22 21 17 16 15 14 13 12 11 10 9 8 7 6 5
SALEABLE	NOT APPLICABLE	34566-8853	0	B	ST GRY	72 68 67 63 62 61 60 59 55 52 48 47 46 44 43 41 40 38 37 36 35 73 30 27 22 21 20 19 18 16 14 11 8 6 4 1

MX123 52/66/73/80-WAY RECEPTACLE ASSY SEALED PIN OUT SHEET

STATUS	GM PART #	HRNS CONN ASSY			TPA	GROMMET CAP
		MATERIAL/PART NUMBER	WIRE DRESS OPTION	KEY OPTION Fp	COLOR OPTION Fp	NUMBERS INDICATE CAVITIES OPEN FOR CIRCUITS Fp
SALEABLE	NOT APPLICABLE	34566-8863	0	B	ST GRY	72 71 70 69 64 63 61 58 57 56 55 52 51 50 49 43 38 37 36 33 73 32 30 29 28 26 25 24 23 22 21 20 16 14 13 12 11 10 9 8 7 6 5 4
SALEABLE	NOT APPLICABLE	34566-8873	0	B	ST GRY	72 71 70 69 64 63 61 58 57 56 55 52 51 50 49 43 38 37 36 33 73 32 31 30 29 28 26 25 24 23 22 21 20 16 15 14 13 12 11 10 9 8 7 6 5 4
SALEABLE	NOT APPLICABLE	34566-8883	0	B	ST GRY	72 71 70 69 68 67 66 65 64 63 61 60 59 58 57 56 55 52 51 50 49 48 47 46 45 44 43 41 40 39 38 37 36 35 34 33 73 32 31 30 29 28 27 26 25 24 23 22 21 20 19 18 17 16 15 14 13 12 11 10 9 8 7 6 5 4 3 2 1
SALEABLE	NOT APPLICABLE	34566-8893	0	A	BLACK	72 70 67 66 65 63 60 59 58 57 56 55 52 51 49 48 47 46 45 43 42 40 39 38 37 36 35 73 28 27 23 22 21 18 17 12 11 9 7 2 1
SALEABLE	NOT APPLICABLE	34566-8913	0	A	BLACK	72 71 70 69 68 66 65 64 63 60 57 56 54 52 51 50 49 48 46 45 44 43 42 41 40 39 38 37 36 34 73 32 31 30 29 28 23 22 21 15 14 13 12 7 6 5 2 1
SALEABLE	NOT APPLICABLE	34566-8923	0	A	BLACK	71 70 69 68 67 64 63 62 61 60 59 57 56 55 54 53 52 51 50 49 46 45 44 43 42 41 40 39 38 37 36 34 73 32 29 28 27 26 25 21 18 16 15 14 13 12 11 10 9 8 5 3
SALEABLE	NOT APPLICABLE	34566-8933	0	C	BLUE	72 71 69 68 66 65 63 59 58 56 53 43 39 38 36 73 31 30 29 24 23 22 21 20 6 5 4 3 2 1
SALEABLE	NOT APPLICABLE	34566-8943	0	B	ST GRY	72 68 62 61 55 52 46 43 40 73 22 21 20 19 18 17 16 15 14 8 6 4 3 2
SALEABLE	NOT APPLICABLE	34566-8953	9	C	BLUE	72 71 70 69 67 66 64 60 54 52 51 50 49 47 46 44 40 39 38 73 30 29 28 27 26 25 24 23 22 21 17 16 15 14 13 12 11 10 9 8 7 6 5
SALEABLE	NOT APPLICABLE	34566-8963	0	B	ST GRY	72 62 61 60 59 55 52 48 47 46 43 41 40 38 37 36 35 73 30 22 21 20 19 18 17 16 15 14 6 4 1
SALEABLE	NOT APPLICABLE	34566-8973	0	A	BLACK	72 71 70 69 68 66 65 64 63 60 57 56 54 52 51 50 49 48 46 45 44 43 42 40 39 38 37 36 34 73 32 31 30 29 28 23 22 21 17 15 14 13 12 7 6 5 2
SALEABLE	NOT APPLICABLE	34566-8983	0	C	BLUE	71 70 67 66 64 61 60 57 54 52 51 50 49 48 47 45 44 41 37 34 33 73 32 28 27 25 18 17 16 15 14 13 12 11 10 9 8 7
SALEABLE	NOT APPLICABLE	34822-0303	0	A	BLACK	66 65
SALEABLE	NOT APPLICABLE	34822-0313	0	A	BLACK	63 62 61 60 59 54 53 49 38 37 35 33 66 65 31 28 24 23 22 21 20 19 18 17 16 15 14 13 8 7 4 3 2 1
SALEABLE	NOT APPLICABLE	34566-8993	0	B	ST GRY	66 62 58 41 38 37 73 19 18 17 5 1

molex

MX123 52/66/73/80-WAY RECEPTACLE ASSY SEALED PIN OUT SHEET

STATUS	GM PART #	HRNS CONN ASSY			TPA	GROMMET CAP
		MATERIAL/PART NUMBER	WIRE DRESS OPTION	KEY OPTION Fp	COLOR OPTION Fp	NUMBERS INDICATE CAVITIES OPEN FOR CIRCUITS Fp
SALEABLE	NOT APPLICABLE	34566-9013	0	A	BLACK	69 68 65 64 63 62 61 60 49 48 45 44 43 42 41 40 38 34 73 25 24 23 22 20 19 9 6 5 4
SALEABLE	NOT APPLICABLE	34566-9023	0	B	ST GRY	62 59 42 41 39 38 73 31 27 23 22 20 18 17 15 7 4 3
SALEABLE	NOT APPLICABLE	34822-0323	9	A	BLACK	62 61 60 59 58 57 56 55 52 50 66 48 47 46 45 44 43 42 41 40 39 36 34 65 32 31 30 29 27 26 25 23 21 11 10 9 6 5
SALEABLE	NOT APPLICABLE	34566-9033	0	C	BLUE	72 70 67 63 60 59 58 57 56 55 52 51 50 49 47 46 45 44 39 38 34 73 31 30 29 28 26 25 24 23 22 21 17 16 15 14 13 12 9 8 7 6 5
SALEABLE	NOT APPLICABLE	34566-9043	0	C	BLUE	72 71 70 69 67 66 65 64 54 52 51 50 49 47 46 45 44 39 38 73 30 29 28 26 25 24 23 22 21 17 16 15 14 13 12 9 8 7 6 5
SALEABLE	NOT APPLICABLE	34566-9053	0	C	BLUE	72 71 70 69 68 66 65 64 61 60 57 56 54 53 52 51 50 49 48 46 45 44 43 42 40 39 38 37 36 34 33 73 31 30 29 28 23 22 21 20 15 14 13 12 7 6 5 4 2
SALEABLE	NOT APPLICABLE	34566-9063	0	B	ST GRY	72 68 62 61 60 59 55 52 46 44 43 41 40 73 22 21 20 19 18 17 16 15 14 8 6 4
SALEABLE	NOT APPLICABLE	34566-9073	0	B	ST GRY	72 71 70 69 68 67 66 65 64 63 61 60 59 57 56 55 52 51 50 49 48 47 46 45 44 43 41 40 39 38 37 36 35 34 33 73 32 31 30 29 28 26 24 23 22 21 20 19 18 17 16 15 14 13 12 9 8 7 6 5 4 3 2 1
SALEABLE	NOT APPLICABLE	34566-9083	0	A	BLACK	72 70 67 63 60 59 58 57 56 55 52 51 48 47 46 43 42 40 39 38 37 36 35 73 28 27 22 21 18 17 12 11 9 7 2 1
SALEABLE	NOT APPLICABLE	34566-9093	0	A	BLACK	72 70 67 63 60 59 58 57 56 55 52 51 48 47 46 43 42 40 39 38 37 36 35 73 28 27 22 21 18 17 12 11 9 7 2 1
SALEABLE	NOT APPLICABLE	34566-9113	0	A	BLACK	72 71 70 69 68 66 65 64 61 60 57 56 54 53 52 51 50 49 48 46 45 44 43 42 40 39 38 37 36 34 33 73 31 30 29 28 23 22 21 20 15 14 13 12 10 7 6 5 4 2
SALEABLE	NOT APPLICABLE	34566-9123	0	G	BLUE	78 77 76 75 74 72 70 64 63 60 58 57 56 55 54 52 51 50 49 47 45 40 39 38 37 33 32 31 27 26 20 19 18 17 10 9 8 6 4 3 2 1
SALEABLE	NOT APPLICABLE	34822-0333	0	A	BLACK	58 57 56 55 52 50 66 48 46 45 44 43 42 41 40 39 36 34 65 32 31 30 29 27 26 23 16 11 10 9 6 5
SALEABLE	NOT APPLICABLE	34822-0343	0	A	BLACK	61 58 66 44 43 41 40 38 65 31 5 4
SALEABLE	NOT APPLICABLE	34822-0353	0	A	BLACK	64 58 57 56 55 52 50 66 48 47 46 45 44 43 42 41 40 39 36 34 65 32 30 29 27 26 16 12 11 10 9 6 5

MX123 52/66/73/80-WAY RECEPTACLE ASSY SEALED PIN OUT SHEET

STATUS	GM PART #	HRNS CONN ASSY			TPA	GROMMET CAP
		MATERIAL/PART NUMBER	WIRE DRESS OPTION	KEY OPTION Fp	COLOR OPTION Fp	NUMBERS INDICATE CAVITIES OPEN FOR CIRCUITS Fp
SALEABLE	NOT APPLICABLE	34566-9143	9	F	NATURAL	72 71 70 67 66 65 64 63 62 61 56 55 54 53 52 51 50 49 48 47 46 45 44 41 40 39 36 35 34 73 32 31 29 28 27 26 25 24 23 22 21 20 16 15 14 13 12 11 10 9 8 7 6 5 4
SALEABLE	NOT APPLICABLE	34566-9153	9	B	ST GRY	66 62 58 41 38 37 73 20 19 18 17 8 5 1
SALEABLE	NOT APPLICABLE	34566-9163	9	B	ST GRY	68 67 66 65 62 60 59 54 53 48 47 46 45 44 42 41 40 39 35 34 73 31 27 19 18 17 15 3 2 1
SALEABLE	NOT APPLICABLE	34566-9173	0	B	ST GRY	65 62 58 41 38 37 73 19 18 17 5 1
SALEABLE	NOT APPLICABLE	34822-0363	9	C	BLUE	61 58 66 44 43 41 40 38 65 31 20 5 4
SALEABLE	NOT APPLICABLE	34822-0373	9	A	BLACK	64 63 62 61 60 55 52 51 49 66 48 47 46 45 38 65 32 30 29 27 22 21 20 19 18 17 12 11 10 5 4 3 2 1
SALEABLE	NOT APPLICABLE	34822-0383	9	A	BLACK	64 63 62 61 60 57 52 51 49 66 48 47 46 45 40 65 32 30 29 27 22 21 20 19 18 17 12 11 10 5 4 3 2 1
SALEABLE	NOT APPLICABLE	34822-0393	0	A	BLACK	64 63 62 61 60 57 52 51 49 66 48 47 46 45 38 65 32 30 29 27 22 21 20 19 18 17 12 11 10 5 4 3 2 1
SALEABLE	NOT APPLICABLE	34822-0403	9	A	BLACK	64 63 54 53 51 49 66 38 37 35 33 65 31 28 22 20 19 18 17 15 14 13 12 11 8 7 4 3 2 1
SALEABLE	NOT APPLICABLE	34822-0413	0	A	BLACK	64 63 54 53 51 49 66 38 37 35 33 65 28 22 20 19 18 17 15 14 13 12 8 7 4 3 2 1
SALEABLE	NOT APPLICABLE	34822-0423	9	A	BLACK	59 58 57 56 54 53 50 66 44 43 42 41 40 39 37 36 35 34 33 65 31 28 26 25 24 23 16 15 14 13 9 8 7 6
SALEABLE	NOT APPLICABLE	34566-9183	9	B	ST GRY	72 71 70 69 68 67 65 64 63 62 61 60 59 58 57 56 55 54 53 52 51 50 49 48 47 46 45 44 43 42 40 39 36 35 34 33 73 32 31 30 29 28 27 26 25 24 23 22 21 19 16 15 14 13 12 11 10 9 7 6 4 3 2
SALEABLE	NOT APPLICABLE	34566-9193	9	F	NATURAL	69 68 58 57 43 42 38 37 33 73 30 19 18 17 8 3 2 1
SALEABLE	NOT APPLICABLE	34822-0433	0	A	BLACK	64 63 62 60 59 57 56 55 54 53 52 51 50 49 66 48 47 46 45 42 39 37 36 35 34 33 65 32 30 29 28 27 26 25 24 23 22 21 20 19 18 17 16 15 14 13 12 11 10 9 8 7 6 3 2 1
SALEABLE	NOT APPLICABLE	34822-0443	0	A	BLACK	64 63 62 60 59 57 56 55 54 53 52 51 50 49 66 48 47 46 45 42 39 37 36 35 34 33 65 32 31 30 29 28 27 26 25 24 23 22 21 20 19 18 17 16 15 14 13 12 11 10 9 8 7 6 3 2 1

MX123 52/66/73/80-WAY RECEPTACLE ASSY SEALED PIN OUT SHEET

STATUS	GM PART #	HRNS CONN ASSY			TPA	GROMMET CAP
		MATERIAL/PART NUMBER	WIRE DRESS OPTION	KEY OPTION Fp	COLOR OPTION Fp	NUMBERS INDICATE CAVITIES OPEN FOR CIRCUITS Fp
SALEABLE	NOT APPLICABLE	34822-0453	0	A	BLACK	59 56 54 53 50 66 44 43 42 41 40 39 37 36 35 34 33 65 31 28 26 25 24 23 16 15 14 13 9 8 7 6
SALEABLE	NOT APPLICABLE	34566-9213	0	B	ST GRY	68 67 66 65 64 59 58 57 55 54 53 51 50 49 48 46 45 43 42 41 40 39 38 37 35 33 73 32 31 30 26 24 23 22 20 16 13 10 9 8 7 6 5 4 3 2
SALEABLE	NOT APPLICABLE	34566-9223	9	B	ST GRY	72 62 61 60 59 55 52 48 47 46 41 40 38 37 36 35 73 30 22 21 20 19 18 16 15 14 6 4 3 1
SALEABLE	NOT APPLICABLE	34566-9233	9	C	BLUE	71 67 65 64 61 60 59 57 54 52 51 50 48 47 45 44 41 39 37 34 33 73 32 28 27 25 23 18 16 15 14 13 12 11 10 9 8 7 6 5
SALEABLE	NOT APPLICABLE	34566-9243	9	B	ST GRY	72 71 70 69 64 63 61 58 57 56 55 52 51 50 49 43 38 37 36 33 73 32 30 29 28 26 25 24 23 22 21 20 16 14 13 12 11 10 9 8 7 6 5 4
SALEABLE	NOT APPLICABLE	34566-9253	9	B	ST GRY	72 71 70 69 68 67 65 64 63 62 61 60 59 57 56 55 54 53 52 51 50 49 48 47 46 45 44 43 42 40 39 36 35 34 33 73 32 31 30 29 28 27 26 25 24 23 22 21 16 15 14 13 12 11 10 9 7 6 4 3 2
SALEABLE	NOT APPLICABLE	34566-9263	9	B	ST GRY	72 68 62 61 60 59 55 52 46 43 41 40 73 22 21 20 16 15 14 8 6 4
SALEABLE	NOT APPLICABLE	34822-0463	0	A	BLACK	64 63 62 60 59 57 56 55 54 53 52 51 50 49 66 48 47 46 45 43 42 39 37 36 35 34 33 65 32 30 29 28 27 26 25 24 23 22 21 20 19 18 17 16 15 14 13 12 11 10 9 8 7 6 3 2 1
SALEABLE	NOT APPLICABLE	34822-0473	9	C	BLUE	64 63 62 60 59 57 56 55 54 53 51 49 66 48 47 46 45 42 39 37 35 33 65 32 21 19 18 17 16 15 3 2 1
SALEABLE	NOT APPLICABLE	34822-0483	9	A	BLACK	64 63 54 53 51 49 66 38 37 35 33 65 28 24 23 21 20 19 18 17 15 14 13 8 7 4 3 2 1
SALEABLE	NOT APPLICABLE	34566-9273	9	B	ST GRY	72 71 70 69 68 67 65 64 63 61 60 59 57 56 55 54 53 50 49 48 47 46 44 43 42 40 39 36 35 34 33 73 32 31 30 29 28 27 26 25 24 23 22 21 16 15 14 13 12 11 10 9 7 6 4 3 2
SALEABLE	NOT APPLICABLE	34822-0493	0	C	BLUE	64 63 62 60 59 57 56 55 54 53 52 51 50 49 66 48 47 46 45 42 39 37 36 35 34 33 65 32 30 29 28 27 26 25 24 23 22 21 20 19 18 17 16 15 14 13 12 11 10 9 8 7 6 3 2 1
SALEABLE	NOT APPLICABLE	34566-9283	9	G	BLUE	80 79 78 71 67 60 59 58 57 51 50 49 48 47 44 41 40 39 37 33 32 30 29 28 27 25 24 18 12 11 9 8 5 3 2
SALEABLE	NOT APPLICABLE	34566-9293	9	G	BLUE	80 79 78 71 67 60 59 58 57 54 51 50 49 48 47 44 41 40 39 37 33 32 30 29 28 27 25 24 20 19 18 12 11 9 8 5 3 2
SALEABLE	NOT APPLICABLE	34566-9313	9	A	BLACK	72 64 62 61 60 58 57 56 55 54 53 52 51 48 46 45 43 41 40 37 73 32 30 29 27 25 20 16 15 13 11 10 9 4

MX123 52/66/73/80-WAY RECEPTACLE ASSY SEALED PIN OUT SHEET

STATUS	GM PART #	HRNS CONN ASSY			TPA	GROMMET CAP																	
		MATERIAL/PART NUMBER	WIRE DRESS OPTION	KEY OPTION Fp	COLOR OPTION Fp	NUMBERS INDICATE CAVITIES OPEN FOR CIRCUITS Fp																	
SALEABLE	NOT APPLICABLE	34566-9323	9	A	BLACK	72								64		62	61		59	58	57	56	55	54	53
						52	51			48		46	45		43		41	40			37		35	34	
						73				32		30	29		27		25					20			
										16	15		13		11	10	9					4	3		
SALEABLE	NOT APPLICABLE	34566-9333	9	A	BLACK	72								64		62	61		59	58	57	56	55	54	
						52	51			48		46	45		43		41	40			37		35	34	
						73				32		30	29		27		25					20			
										16	15		13		11	10	9					4			
SALEABLE	NOT APPLICABLE	34566-9343	9	C	BLUE	72		70	69	68		66			63	62				58		56	55		53
									49			46			43	42		40		38		36	35		
						73					31	30	29			26		24		22	21	20	19		17
																						4	3	2	1
SALEABLE	NOT APPLICABLE	34822-0503	0	A	BLACK	64		62	61	60	59	58				54	53		51			66			
						48	47									38	37	36		34					
						65						30	29	28		26		24			21				17
											15		13				9		7			4	3	2	1
SALEABLE	NOT APPLICABLE	34822-0513	9	A	BLACK		63	62	61		59					54	53				49	66			
																38	37		35		33				
						65					31			28				24		22	21	20	19	18	17
											15	14	13	12				8	7			4	3	2	1
SALEABLE	NOT APPLICABLE	34566-9353	9	A	BLACK	72								64		62	61			58	57	56	55	54	53
						52	51			48		46	45		43		41	40			37		35	34	
						73				32		30	29		27		25					20			
										16	15		13		11	10	9					4			
SALEABLE	NOT APPLICABLE	34566-9363	9	A	BLACK	72								64		62	61				57	56	55	54	53
						52	51					46	45		43			40			37		35	34	
						73				32		30	29		27		25					20			
										16	15		13		11	10	9					4			
SALEABLE	NOT APPLICABLE	34566-9373	9	G	BLUE	80									71					66		64			
							59		57								49								
							39									30									
						20																			
SALEABLE	NOT APPLICABLE	34566-9383	9	A	BLACK	72	71	70	69	68				64	63	62	61		59	58	57	56	55	54	53
						52	51	50		48	47	46	45	44	43		41	40	39	38	37		35	34	33
						73				32		30	29		27	26	25	24				20	19	18	17
										16	15	14	13	12	11	10	9	8	7			4	3	2	1
SALEABLE	NOT APPLICABLE	34566-9393	0	B	ST GRY	72	71	70	69	68	67		65	64	63		61	60	59		57	56	55	54	53
						52	51	50	49	48	47	46	45	44	43	42		40	39			36	35	34	33
						73				32	31	30	29	28	27	26	25	24	23	22	21	20			
										16	15	14	13	12	11	10	9	8	7	6		4	3	2	
SALEABLE	NOT APPLICABLE	34566-9413	9	H	ST GRY																				
SALEABLE	NOT APPLICABLE	34566-9423	0	A	BLACK	72	71	70			67	66								58	57	56	55	54	53
						52	51	50			47	46							39		37	36	35		33
						73				32	31	30	29	28	27	26								18	17
										16	15	14	13	12	11	10		8	7				3	2	1
SALEABLE	NOT APPLICABLE	34566-9433	0	B	ST GRY	72	71	70	69	68	67	66	65	64	63		61			58	57	56	55	54	53
						52	51	50	49	48	47	46	45	44				40	39		37	36	35	34	33
						73						30	29	28	27	26	25	24			21				
										16		14	13	12		10	9	8		6	5			2	1
SALEABLE	NOT APPLICABLE	34566-9443	9	B	ST GRY	72	71	70	69	68	67		65	64	63	62	61	60	59		57	56	55	54	53
								50	49	48	47	46		44	43	42		40	39			36	35	34	33
						73				32	31	30	29	28	27	26	25	24	23	22	21				
										16	15	14	13	12	11	10	9		7	6		4	3	2	
SALEABLE	NOT APPLICABLE	34566-9453	0	A	BLACK	72	71	70	69		67			64			61	60	59		57	56	55	54	53
						52	51			48			45	44			41	40	39	38	37	36	35	34	
						73					31	30	29		27	26	25			22			19	18	
										16	15	14	13	12	11	10	9	8	7	6	5			2	

MX123 52/66/73/80-WAY RECEPTACLE ASSY SEALED PIN OUT SHEET

STATUS	GM PART #	HRNS CONN ASSY			TPA	GROMMET CAP
		MATERIAL/PART NUMBER	WIRE DRESS OPTION	KEY OPTION Fp	COLOR OPTION Fp	NUMBERS INDICATE CAVITIES OPEN FOR CIRCUITS Fp
SALEABLE	NOT APPLICABLE	34566-9463	0	G	BLUE	80 79 78 75 66 65 64 59 46 43 42 41 39 38 37 35 30 26 25 24 22 21 20 18 17 16 12 8 7 6 5 3 2 1
SALEABLE	NOT APPLICABLE	34566-9473	0	G	BLUE	80 79 78 75 66 65 64 62 59 53 46 43 42 41 39 38 37 35 30 26 25 24 22 21 20 18 17 16 12 8 7 6 5 3 2 1
SALEABLE	NOT APPLICABLE	34566-9483	0	G	BLUE	80 79 78 75 66 65 64 46 43 42 41 39 38 37 35 30 26 25 24 22 21 20 18 17 16 12 8 7 6 5 3 2 1
SALEABLE	NOT APPLICABLE	34566-9493	0	G	BLUE	80 79 78 75 66 65 59 46 43 42 41 39 38 37 35 30 26 25 24 22 21 20 18 17 16 12 8 7 6 5 3 2 1
SALEABLE	NOT APPLICABLE	34566-9513	0	G	BLUE	80 79 78 77 76 75 74 73 72 71 70 69 68 67 66 65 64 63 62 61 60 59 58 57 56 55 54 53 52 51 50 49 48 46 43 42 41 39 38 37 35 30 26 25 24 22 21 20 18 17 16 12 8 7 6 5 3 2 1
SALEABLE	NOT APPLICABLE	34566-9523	0	G	BLUE	80 79 78 75 66 65 64 62 59 57 53 46 43 42 41 39 38 37 35 33 30 26 25 24 22 21 20 18 17 16 8 7 6 5 3 2 1
SALEABLE	NOT APPLICABLE	34822-0523	0	C	BLUE	64 63 62 60 59 57 56 55 54 53 52 51 50 49 48 47 46 45 42 39 37 36 35 34 33 66 65 32 30 29 28 27 26 25 24 23 22 19 18 17 16 15 14 13 12 11 10 9 8 7 6 3 2 1
SALEABLE	NOT APPLICABLE	34566-9543	0	A	BLACK	49 48 47 46 45 44 43 40 38 37 36 34 73 32 31 29 28 27 25 24 23 22 20 19 18 17 16 15 12 10 9 6 5 2 1
SALEABLE	NOT APPLICABLE	34566-9553	0	C	BLUE	52 51 50 49 66 65 64 63 62 60 59 57 56 55 54 53 48 47 46 45 42 39 37 36 35 34 33 73 32 30 29 28 27 26 25 24 23 22 19 18 17 16 15 14 13 12 11 10 9 8 7 6 3 2 1
SALEABLE	NOT APPLICABLE	34566-9563	0	C	BLUE	72 71 70 69 67 66 65 64 60 56 54 52 51 50 49 48 47 46 45 44 40 39 38 34 73 31 30 28 26 25 24 23 22 21 20 17 16 15 14 13 12 9 8 7 6 5 4
SALEABLE	NOT APPLICABLE	34566-9573	0	B	ST GRY	72 71 70 69 68 67 65 64 63 61 60 59 57 56 55 54 53 52 51 50 49 48 47 46 45 44 43 42 40 39 36 35 34 33 73 32 31 30 29 28 27 26 25 24 23 22 21 16 15 14 13 12 11 10 9 8 7 6 4 3 2
SALEABLE	NOT APPLICABLE	34566-9583	0	B	ST GRY	72 71 70 69 68 67 66 65 64 63 61 60 59 57 56 55 54 52 51 50 49 48 47 46 45 44 43 41 40 39 38 37 36 35 34 33 73 32 31 30 29 28 26 24 23 22 21 20 19 18 17 16 15 14 13 12 9 8 7 6 5 4 3 2 1
SALEABLE	NOT APPLICABLE	34566-9593	0	A	BLACK	72 70 67 63 60 59 58 57 56 55 52 51 48 47 43 42 40 39 38 37 36 35 73 28 27 18 17 12 11 9 7 2 1
SALEABLE	NOT APPLICABLE	34566-9613	0	C	BLUE	71 70 69 67 66 65 64 60 56 52 51 50 49 47 46 45 44 40 39 34 73 31 30 28 26 25 24 23 22 21 20 19 18 17 16 15 14 13 12 9 8 7 6 5 4
SALEABLE	NOT APPLICABLE	34566-9623	9	B	ST GRY	72 71 70 64 63 61 58 57 56 55 52 51 50 43 38 37 36 73 32 30 29 28 26 25 24 23 22 21 20 16 14 13 11 10 9 8 7 6 5 4

MX123 52/66/73/80-WAY RECEPTACLE ASSY SEALED PIN OUT SHEET

STATUS	GM PART #	HRNS CONN ASSY			TPA	GROMMET CAP
		MATERIAL/PART NUMBER	WIRE DRESS OPTION	KEY OPTION Fp	COLOR OPTION Fp	NUMBERS INDICATE CAVITIES OPEN FOR CIRCUITS Fp
SALEABLE	NOT APPLICABLE	34566-9633	9	B	ST GRY	72 71 70 69 68 67 65 64 63 61 60 59 57 56 55 54 53 52 51 50 49 48 47 46 45 44 43 42 40 39 36 35 34 33 73 32 31 30 29 28 27 26 25 24 23 22 21 20 16 15 14 13 12 11 10 9 7 6 3 2
SALEABLE	NOT APPLICABLE	34566-9643	9	A	BLACK	69 64 63 61 59 52 48 44 43 41 39 38 35 34 73 30 29 10 5 2
SALEABLE	NOT APPLICABLE	34566-9653	9	G	BLUE	80 66 65 59 57 39 30 20
SALEABLE	NOT APPLICABLE	34566-9663	0	B	ST GRY	72 71 70 69 68 67 66 65 64 63 61 58 57 56 55 54 53 52 51 50 49 48 47 46 45 44 40 37 36 35 34 33 73 32 30 29 28 26 25 24 21 16 14 13 12 10 9 8 6 5 2 1
SALEABLE	NOT APPLICABLE	34822-0533	9	C	BLUE	64 63 60 59 57 56 55 53 52 51 50 49 66 48 47 46 45 42 39 38 36 35 34 33 65 32 30 29 28 27 26 25 24 23 22 20 18 17 16 14 13 12 11 10 9 8 7 6 3 2 1
SALEABLE	NOT APPLICABLE	34822-0543	0	A	BLACK	64 63 62 61 60 59 54 53 51 49 66 47 38 37 35 33 65 28 25 24 22 21 20 19 18 17 15 14 13 12 8 7 4 3 2 1
SALEABLE	NOT APPLICABLE	34822-0553	0	A	BLACK	64 63 54 53 51 49 66 38 37 35 33 65 31 28 24 23 21 20 19 18 17 15 14 13 8 7 4 3 2 1
SALEABLE	NOT APPLICABLE	34822-0563	0	C	BLUE	64 63 62 60 59 57 56 55 54 53 52 51 50 49 66 48 47 46 45 42 39 37 36 35 34 33 65 32 30 29 28 27 26 24 23 22 19 18 17 16 15 14 13 12 11 10 9 8 7 6 3 2 1
SALEABLE	NOT APPLICABLE	34566-9673	0	C	BLUE	72 71 70 69 67 66 65 64 60 56 54 52 51 50 49 47 46 45 44 40 39 38 34 73 31 30 28 26 25 24 23 22 21 20 17 16 15 14 13 12 9 8 7 6 5 4
SALEABLE	NOT APPLICABLE	34566-9683	0	B	ST GRY	72 71 70 69 68 67 66 65 64 63 61 60 57 56 55 54 52 51 50 49 48 47 46 45 44 43 41 40 38 37 36 35 33 73 32 31 30 29 28 26 24 23 22 21 20 19 17 16 15 14 13 12 9 8 7 6 5 4 3 1
SALEABLE	NOT APPLICABLE	34566-9693	0	A	BLACK	72 70 67 63 60 59 58 57 56 55 53 52 51 48 47 43 42 40 39 38 37 36 35 33 73 28 18 17 12 11 2 1
SALEABLE	NOT APPLICABLE	34566-9713	0	B	ST GRY	68 67 66 65 64 59 58 57 55 54 53 51 50 49 48 46 45 43 42 40 39 38 37 35 33 73 32 31 30 26 24 23 22 20 16 13 10 9 8 7 6 5 4 3 2
SALEABLE	NOT APPLICABLE	34566-9723	0	B	ST GRY	72 71 70 69 68 67 66 65 64 63 61 58 57 56 55 52 51 50 49 48 47 46 45 43 40 37 36 73 32 30 29 28 26 25 24 21 19 16 14 13 12 11 10 9 8 6 5
SALEABLE	NOT APPLICABLE	34566-9733	0	A	BLACK	72 71 70 67 66 59 53 52 51 50 47 46 39 37 35 33 73 30 29 28 27 26 24 23 21 17 16 13 11 10 8 7 3 1
SALEABLE	NOT APPLICABLE	34822-0573	0	A	BLACK	64 63 54 53 51 49 66 38 37 35 33 65 28 24 22 20 19 18 17 15 14 13 12 8 7 4 3 2 1

molex

MX123 52/66/73/80-WAY RECEPTACLE ASSY SEALED PIN OUT SHEET

STATUS	GM PART #	HRNS CONN ASSY			TPA	GROMMET CAP
		MATERIAL/PART NUMBER	WIRE DRESS OPTION	KEY OPTION Fp	COLOR OPTION Fp	NUMBERS INDICATE CAVITIES OPEN FOR CIRCUITS Fp
SALEABLE	NOT APPLICABLE	34822-0583	0	A	BLACK	65
SALEABLE	NOT APPLICABLE	34822-0593	0	A	BLACK	65
SALEABLE	NOT APPLICABLE	34566-9743	0	B	ST GRY	73
SALEABLE	NOT APPLICABLE	34566-9753	0	C	BLUE	73
SALEABLE	NOT APPLICABLE	34566-9763	0	G	BLUE	
SALEABLE	NOT APPLICABLE	34566-9773	0	A	BLACK	73
SALEABLE	NOT APPLICABLE	34566-9783	0	B	ST GRY	73
SALEABLE	NOT APPLICABLE	34822-0603	0	C	BLUE	65
SALEABLE	NOT APPLICABLE	34822-0613	0	A	BLACK	65
SALEABLE	NOT APPLICABLE	34566-9793	9	B	ST GRY	73
SALEABLE	NOT APPLICABLE	34566-9813	9	A	BLACK	73
SALEABLE	NOT APPLICABLE	34822-0623	0	A	BLACK	65
SALEABLE	NOT APPLICABLE	34566-9823	0	A	BLACK	73
SALEABLE	NOT APPLICABLE	34822-0633	0	A	BLACK	65
SALEABLE	NOT APPLICABLE	34822-0643	9	C	BLUE	65

molex

MX123 52/66/73/80-WAY RECEPTACLE ASSY SEALED PIN OUT SHEET

STATUS	GM PART #	HRNS CONN ASSY			TPA	GROMMET CAP
		MATERIAL/PART NUMBER	WIRE DRESS OPTION	KEY OPTION Fp	COLOR OPTION Fp	NUMBERS INDICATE CAVITIES OPEN FOR CIRCUITS Fp
SALEABLE	NOT APPLICABLE	34822-0653	0	A	BLACK	64 63 62 61 59 49 38 37 35 33 65 31 28 24 22 21 20 19 18 17 15 14 13 12 8 7 4 3 2 1
SALEABLE	NOT APPLICABLE	34566-9833	9	B	ST GRY	72 71 70 69 68 67 64 63 61 58 57 56 55 54 53 52 51 50 49 48 47 44 43 41 38 37 36 33 73 32 30 29 28 26 25 24 23 22 21 20 16 14 13 12 10 9 8 7 6 5 4
SALEABLE	NOT APPLICABLE	34566-9843	9	A	BLACK	72 71 70 67 66 65 64 63 62 61 59 55 54 53 52 51 50 47 46 45 44 43 42 41 40 39 37 36 35 34 33 73 30 29 18 17 13 8 7 3 1
SALEABLE	NOT APPLICABLE	34566-9853	9	B	ST GRY	72 71 70 69 68 67 65 64 63 62 61 60 59 58 57 56 55 54 53 52 51 50 49 48 47 46 45 44 43 42 40 39 36 35 34 33 73 32 31 30 29 28 27 26 25 24 23 22 21 20 16 15 14 13 12 11 10 9 7 6 3 2
SALEABLE	NOT APPLICABLE	34566-9863	0	B	ST GRY	72 71 70 69 68 67 65 64 63 62 61 60 59 57 56 55 54 53 52 51 50 49 48 47 46 45 44 43 42 40 39 36 35 34 33 73 32 31 30 29 28 27 26 25 24 23 22 21 16 15 14 13 12 11 10 9 8 7 6 3 2
SALEABLE	NOT APPLICABLE	34566-0004	0	A	BLACK	72 71 70 69 67 64 63 61 60 59 57 56 55 54 53 52 51 48 45 44 43 41 40 39 38 37 36 35 34 33 73 31 30 29 27 26 25 22 19 18 16 15 14 13 12 11 10 9 8 7 6 5 2 1
SALEABLE	NOT APPLICABLE	34566-0014	0	G	BLUE	80 79 78 77 75 66 65 64 62 59 57 46 43 42 41 39 38 37 35 33 26 25 24 22 21 20 18 17 16 15 12 8 7 6 5 3 2 1
SALEABLE	NOT APPLICABLE	34566-0024	0	G	BLUE	
SALEABLE	NOT APPLICABLE	34566-0034	0	G	BLUE	80 79 78 75 66 65 64 62 59 57 53 46 43 42 41 39 38 37 35 33 26 25 24 22 21 20 18 17 16 12 8 7 6 5 3 2 1
SALEABLE	NOT APPLICABLE	34566-0044	0	A	BLACK	72 71 70 69 67 64 61 60 59 57 56 55 54 53 52 51 48 45 44 41 40 39 38 37 36 35 34 33 73 31 30 29 27 26 25 22 19 18 16 15 14 13 12 11 10 9 8 7 6 5 3 2
SALEABLE	NOT APPLICABLE	34566-0054	0	G	BLUE	80 79 78 77 75 66 65 64 62 59 57 46 43 42 41 39 38 37 35 33 26 25 24 22 21 20 18 17 16 15 12 8 7 6 5 3 2 1
SALEABLE	NOT APPLICABLE	34566-0064	0	A	BLACK	72 71 70 69 67 64 63 61 60 59 57 56 55 54 53 52 51 48 45 44 43 41 40 39 38 37 36 35 34 73 31 30 29 27 26 25 22 19 18 16 15 14 13 12 11 10 9 8 7 6 5 2 1
SALEABLE	NOT APPLICABLE	34566-0084	0	A	BLACK	70 69 67 64 61 60 59 57 56 55 54 53 52 51 48 45 44 41 40 39 38 37 36 35 34 33 73 31 30 29 27 26 25 22 19 16 15 14 13 12 11 10 8 7 6 5 3 2
SALEABLE	NOT APPLICABLE	34566-0094	0	B	ST GRY	72 71 70 69 68 67 65 64 63 62 61 60 59 57 56 55 54 53 52 51 50 49 48 47 46 45 44 43 42 40 39 36 35 34 33 73 32 31 30 29 28 27 26 25 24 23 22 21 16 15 14 13 12 11 10 9 7 6 4 3 2
SALEABLE	NOT APPLICABLE	34566-0104	0	B	ST GRY	72 71 70 69 68 67 65 64 63 62 61 60 59 57 56 55 54 53 50 49 48 47 46 44 43 42 40 39 36 35 34 33 73 32 31 30 29 28 27 26 25 24 23 22 21 16 15 14 13 12 11 10 9 7 6 4 3 2

MX123 52/66/73/80-WAY RECEPTACLE ASSY SEALED PIN OUT SHEET

STATUS	GM PART #	HRNS CONN ASSY			TPA	GROMMET CAP
		MATERIAL/PART NUMBER	WIRE DRESS OPTION	KEY OPTION Fp	COLOR OPTION Fp	NUMBERS INDICATE CAVITIES OPEN FOR CIRCUITS Fp
SALEABLE	NOT APPLICABLE	34566-0114	0	B	ST GRY	72 71 70 69 — — — — 64 63 — 61 — — 58 57 56 55 — — 52 51 50 49 — — — — — 43 — — — — 38 37 36 — — 33 73 — 32 — 30 29 28 — 26 25 24 23 22 21 20 — — — — 16 15 14 13 12 11 10 9 8 7 6 5 4 — — 1
SALEABLE	NOT APPLICABLE	34566-0124	0	B	ST GRY	72 — — — — — — — 62 61 60 59 — — — 55 — — 52 — — — 48 47 46 — — — — — 40 — — — — — 33 73 — — 30 — — — — — — 22 21 20 19 18 17 — 16 15 14 — — — — — — 6 — 4 3 — —
SALEABLE	NOT APPLICABLE	34566-0134	0	B	ST GRY	72 — — — — — — — 62 61 60 59 — — — 55 — — 52 — — — 48 47 46 — — — — 41 40 — 38 37 36 35 — — 73 — — 30 — — — — — — 22 21 20 19 18 — — 16 15 14 — — — — — — 6 — 4 3 — 1
SALEABLE	NOT APPLICABLE	34566-0144	9	B	ST GRY	— — — — — — 66 — — — — — — — 58 — — — — — — — — — — — — — — — 41 — — 38 37 — — — — 73 — — — — — — — — — — — — — 20 19 18 17 — — — — — — — — — — — — 8 — — 5 4 — — 1
SALEABLE	NOT APPLICABLE	34822-0663	9	C	BLUE	— — — 61 60 — 58 — — — 54 — — — — 66 — — — — 44 43 — — — — — 37 — — — — — 65 — — 31 — — — — — — — — — 21 20 19 — — — — — — — — — — — — — — — 5 4 — — —
SALEABLE	NOT APPLICABLE	34822-0673	0	A	BLACK	64 — — — — — 58 57 56 55 — — 52 51 50 — 66 48 47 46 45 44 43 42 41 40 39 — — 36 — 34 — 65 — 32 — 30 29 — 27 26 25 — — — — — — — — 16 — — — 12 11 10 9 — — 6 5 — — — —
SALEABLE	NOT APPLICABLE	34822-0683	9	A	BLACK	— 63 62 61 60 59 — — — — 54 53 — — — 49 66 — — — — 44 — — — — — 38 37 — 35 — 33 65 — — 31 — — 28 — — — 24 23 22 21 20 19 18 17 — — 15 14 13 — — — — — 8 7 — — 4 3 2 1
SALEABLE	NOT APPLICABLE	34822-0693	9	C	BLUE	— — 62 61 — — 58 — — — 54 — — — — — 66 — — — — 44 43 — 41 40 — — 37 — — — — — 65 — — 31 — — — — — — — — — 20 19 — — — — — — — — — — — — — — — 5 4 — —
SALEABLE	NOT APPLICABLE	34566-0154	9	B	ST GRY	72 71 70 69 68 67 66 65 64 63 62 61 60 59 — 57 56 55 54 53 52 51 50 49 48 47 46 45 44 43 42 — 40 39 — — 36 35 34 33 73 — 32 31 30 29 28 27 26 25 24 23 22 21 — — — — — 16 15 14 13 12 11 10 9 8 7 6 — — 3 2 —
SALEABLE	NOT APPLICABLE	34566-0164	0	G	BLUE	80 79 78 77 — 75 — — — — — — — — 66 65 64 — 62 — — 59 — 57 — — — 53 — — — — — — 46 — 44 43 42 41 — 39 38 37 — 35 — 33 32 — 30 — — — 26 25 24 — 22 21 20 — 18 17 16 — — — 12 11 — — 8 7 6 5 — 3 2 1
SALEABLE	NOT APPLICABLE	34566-0174	9	B	ST GRY	72 71 70 — — 67 66 — — — — — 60 — — 57 — — — 53 52 51 50 — — 47 46 — — — — — — 39 — 37 — 35 — 33 73 — — 30 29 28 — — 25 24 23 22 — 20 19 — 17 — — — — 13 12 — — — 8 7 — — — 3 — 1
SALEABLE	NOT APPLICABLE	34566-0184	9	B	ST GRY	72 71 70 69 68 67 66 65 64 63 — 61 — — 58 57 56 55 54 53 52 51 50 49 48 47 46 45 44 43 42 41 40 — — 37 36 — — — 73 — 32 — 30 29 28 — 26 25 24 — — 21 — — — — — 16 — 14 13 12 11 10 9 8 — 6 5 — — — 1