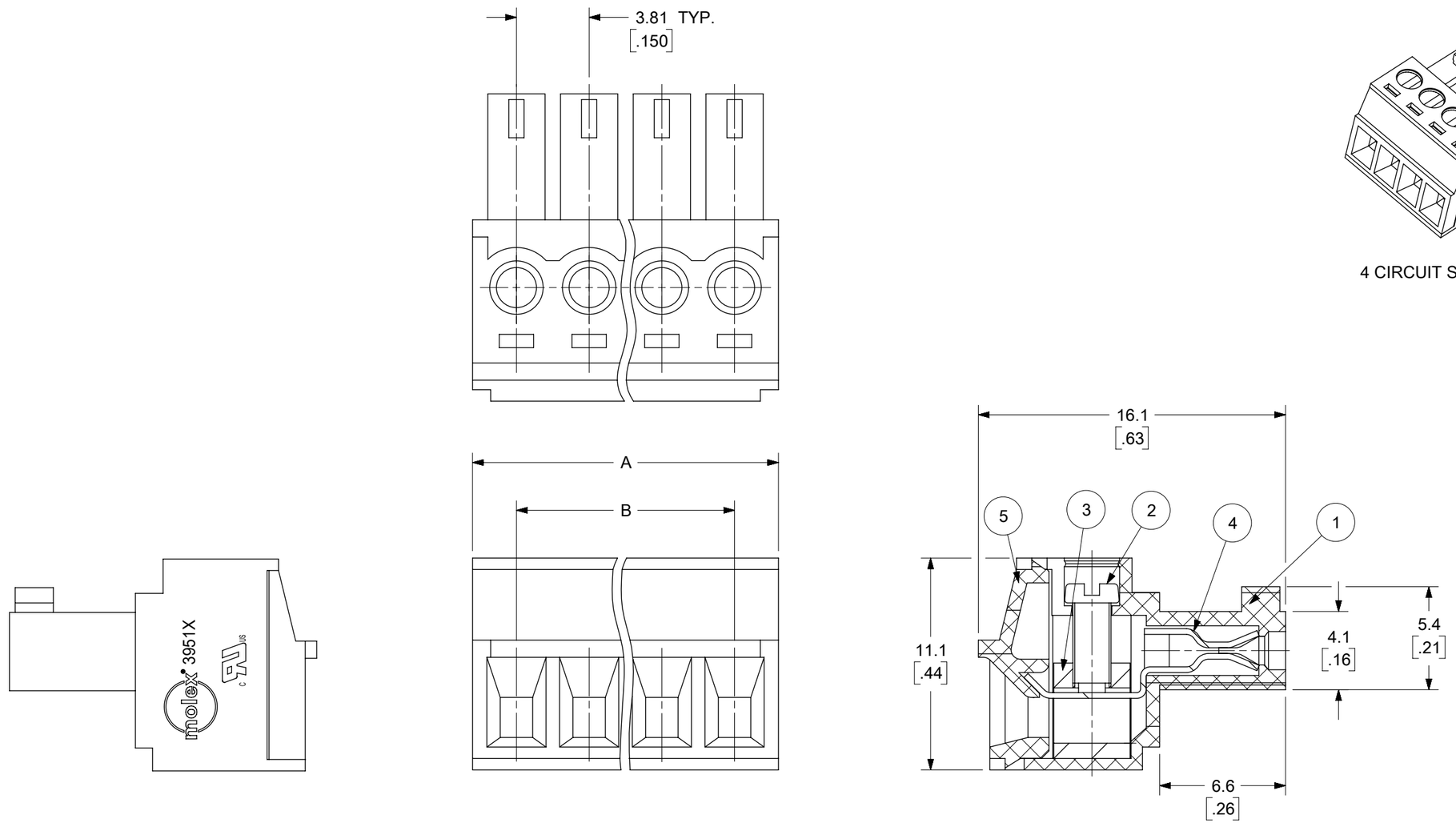

4 CIRCUIT SHOWN

SPECIFICATIONS: D

1. MATERIAL:
   (1). BODY: PA 66 (UL94-V0)
   (2). SCREW: ZINC PLATED STEEL
   (3). CAGE: NICKEL PLATED BRASS
   (4). TERMINAL: TIN PLATED PHOSPHOR BRONZE
   (5). COVER: PA 66 (UL94-V0)
2. PRODUCT SPECIFICATION: PS-39500-001
3. WIRE RANGE: 30 - 16 AWG
4. TORQUE: 2 IN-LBS.
5. WIRE STRIP LENGTH: 6.50/.256
6. NUMBER OF CIRCUIT POSITIONS AVAILABLE = 2 THROUGH 20

TOLERANCES			
MM	TOL	INCH	TOL
0-6	±0.25	0-.24	±.010
>6-30	±0.40	>.24-1.18	±.016
>30-120	±0.50	>1.18-4.76	±.020
>120	±0.80	>4.76	±.031

FUNCTIONAL SYMBOLS: E/A = 0; E/C = 0; E/P = 0

DIVISIONAL SYMBOLS

THIS DRAWING CONTAINS INFORMATION THAT IS PROPRIETARY TO MOLEX ELECTRONIC TECHNOLOGIES, LLC AND SHOULD NOT BE USED WITHOUT WRITTEN PERMISSION

DIMENSION UNITS: MM/INCH
SCALE: 4:1

GENERAL TOLERANCES (UNLESS SPECIFIED)

	MM	INCH
4 PLACES	± ---	± ---
3 PLACES	± ---	± SEE CHART
2 PLACES	± SEE CHART	± SEE CHART
1 PLACE	± SEE CHART	± ---
0 PLACES	± ---	± ---
ANGULAR TOL	± ---	

DRAFT WHERE APPLICABLE MUST REMAIN WITHIN DIMENSIONS

CURRENT REV DESC: UPDATED MATERIAL/PLATING NOTES FOR ITEMS 1-5. UPDATED MOLEX LATEST TITLE BLOCK

EC NO: 833839
DRWN: MARUTD 2025/09/01
CHK'D: DACHAMMER 2025/09/10
APPR: HKNEELAND 2025/09/15

INITIAL REVISION:
DRWN: CYORK 2006/03/23
APPR: RDEROSS 2006/03/24

THIRD ANGLE PROJECTION | DRAWING: B-SIZE | SERIES: 39510

molex

3.81MM, EURO PLUG, RIGHT ANGLE

PRODUCT CUSTOMER DRAWING

DOCUMENT NUMBER	DOC TYPE	DOC PART	REVISION
SD-39510-001	PSD	001	D

MATERIAL NUMBER	CUSTOMER	SHEET NUMBER
SEE SHEET-2	GENERAL MARKET	1 OF 2

DOCUMENT STATUS	P1	RELEASE DATE	2025/09/15 21:55:13

FORMAT: Eng-legs-master-tb-prod-B
REVISION: E1
DATE: 2021/05/01

CIRCUIT SIZE	MATERIAL NUMBERS												DIMENSIONAL INFORMATION			
	BLACK						GREEN									
	100% TIN			30 u" GOLD			100% TIN			30 u" GOLD						
	PRINTING OPTIONS			PRINTING OPTIONS			PRINTING OPTIONS			PRINTING OPTIONS			DIM. "A"		DIM. "B"	
	None	10A	11A	None	10A	11A	None	10A	11A	None	10A	11AV	mm	inch	mm	inch
2	395100002	395100102	395100202	395100502	395100602	395100702	395105002	395105102	395105202	395105502	395105602	395105702	8.4	.33	3.8	.15
3	395100003	395100103	395100203	395100503	395100603	395100703	395105003	395105103	395105203	395105503	395105603	395105703	12.2	.48	7.6	.30
4	395100004	395100104	395100204	395100504	395100604	395100704	395105004	395105104	395105204	395105504	395105604	395105704	16.0	.63	11.4	.45
5	395100005	395100105	395100205	395100505	395100605	395100705	395105005	395105105	395105205	395105505	395105605	395105705	19.8	.78	15.2	.60
6	395100006	395100106	395100206	395100506	395100606	395100706	395105006	395105106	395105206	395105506	395105606	395105706	23.7	.93	19.1	.75
7	395100007	395100107	395100207	395100507	395100607	395100707	395105007	395105107	395105207	395105507	395105607	395105707	27.5	1.08	22.9	.90
8	395100008	395100108	395100208	395100508	395100608	395100708	395105008	395105108	395105208	395105508	395105608	395105708	31.3	1.23	26.7	1.05
9	395100009	395100109	395100209	395100509	395100609	395100709	395105009	395105109	395105209	395105509	395105609	395105709	35.1	1.38	30.5	1.20
10	395100010	395100110	395100210	395100510	395100610	395100710	395105010	395105110	395105210	395105510	395105610	395105710	38.9	1.53	34.3	1.35
11	395100011	395100111	395100211	395100511	395100611	395100711	395105011	395105111	395105211	395105511	395105611	395105711	42.7	1.68	38.1	1.50
12	395100012	395100112	395100212	395100512	395100612	395100712	395105012	395105112	395105212	395105512	395105612	395105712	46.5	1.83	41.9	1.65
13	395100013	395100113	395100213	395100513	395100613	395100713	395105013	395105113	395105213	395105513	395105613	395105713	50.3	1.98	45.7	1.80
14	395100014	395100114	395100214	395100514	395100614	395100714	395105014	395105114	395105214	395105514	395105614	395105714	54.1	2.13	49.5	1.95
15	395100015	395100115	395100215	395100515	395100615	395100715	395105015	395105115	395105215	395105515	395105615	395105715	57.9	2.28	53.3	2.10
16	395100016	395100116	395100216	395100516	395100616	395100716	395105016	395105116	395105216	395105516	395105616	395105716	61.8	2.43	57.2	2.25
17	395100017	395100117	395100217	395100517	395100617	395100717	395105017	395105117	395105217	395105517	395105617	395105717	65.6	2.58	61.0	2.40
18	395100018	395100118	395100218	395100518	395100618	395100718	395105018	395105118	395105218	395105518	395105618	395105718	69.4	2.73	64.8	2.55
19	395100019	395100119	395100219	395100519	395100619	395100719	395105019	395105119	395105219	395105519	395105619	395105719	73.2	2.88	68.6	2.70
20	395100020	395100120	395100220	395100520	395100620	395100720	395105020	395105120	395105220	395105520	395105620	395105720	77.0	3.03	72.4	2.85

TOLERANCES			
MM	TOL	INCH	TOL
0-6	±0.25	0-.24	±.010
>6-30	±0.40	>.24-1.18	±.016
>30-120	±0.50	>1.18-4.76	±.020
>120	±0.80	>4.76	±.031

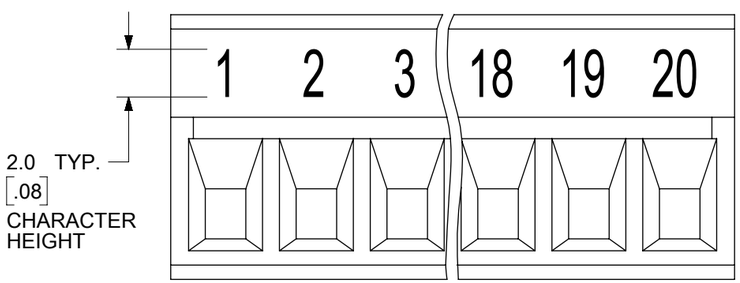

10A IMPRINTING

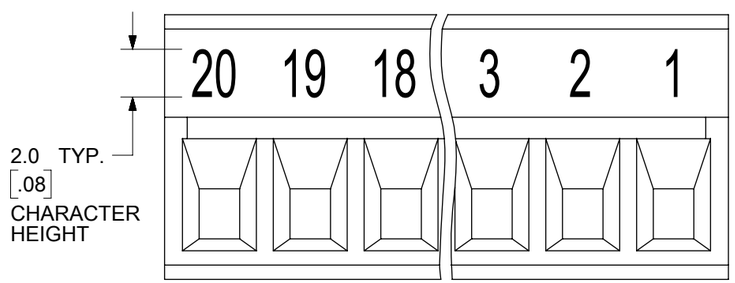

11A IMPRINTING

FUNCTIONAL SYMBOLS: EA = 0, EC = 0, EP = 0

DIVISIONAL SYMBOLS

THIS DRAWING CONTAINS INFORMATION THAT IS PROPRIETARY TO MOLEX ELECTRONIC TECHNOLOGIES, LLC AND SHOULD NOT BE USED WITHOUT WRITTEN PERMISSION

DIMENSION UNITS: MM/INCH
SCALE: 4:1

GENERAL TOLERANCES (UNLESS SPECIFIED)

	MM		INCH	
4 PLACES	±	---	±	---
3 PLACES	±	---	±	SEE CHART
2 PLACES	±	SEE CHART	±	SEE CHART
1 PLACE	±	SEE CHART	±	---
0 PLACES	±	---	±	---
ANGULAR TOL	±	---		

DRAFT WHERE APPLICABLE MUST REMAIN WITHIN DIMENSIONS

CURRENT REV DESC: UPDATED
MATERIAL/PLATING NOTES FOR ITEMS 1-5.
UPDATED MOLEX LATEST TITLE BLOCK

EC NO: 833839
DRWN: MARUTD 2025/09/01
CHK'D: DACHAMMER 2025/09/10
APPR: HKNEELAND 2025/09/15

INITIAL REVISION:
DRWN: CYORK 2006/03/23
APPR: RDEROSS 2006/03/24

THIRD ANGLE PROJECTION

DRAWING: B-SIZE
SERIES: 39510

molex

3.81MM, EURO PLUG, RIGHT ANGLE

PRODUCT CUSTOMER DRAWING

DOCUMENT NUMBER	DOC TYPE	DOC PART	REVISION
SD-39510-001	PSD	001	D

MATERIAL NUMBER	CUSTOMER	SHEET NUMBER
SEE CHART	GENERAL MARKET	2 OF 2

DOCUMENT STATUS	P1	RELEASE DATE	2025/09/15 21:55:13

FORMAT: Eng-lega-master-tb-prod-B
REVISION: E1
DATE: 2021/05/01