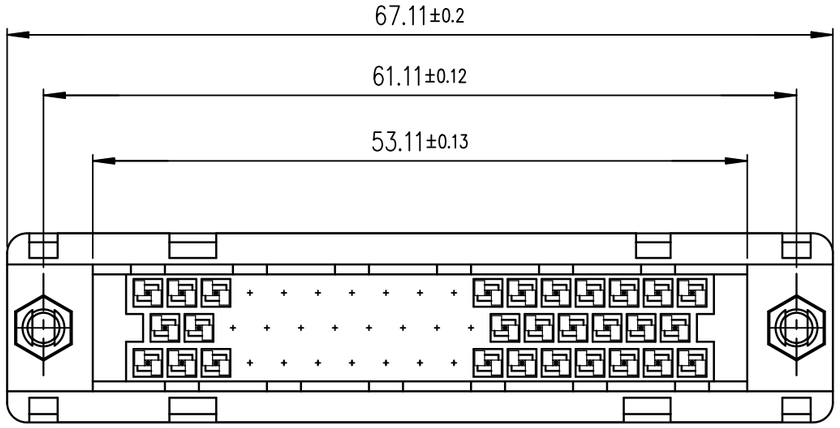

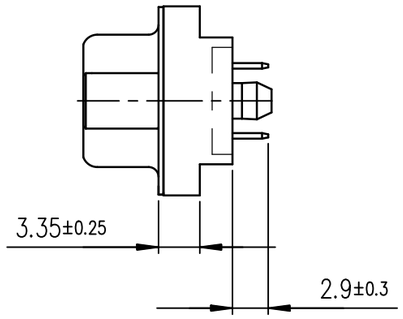

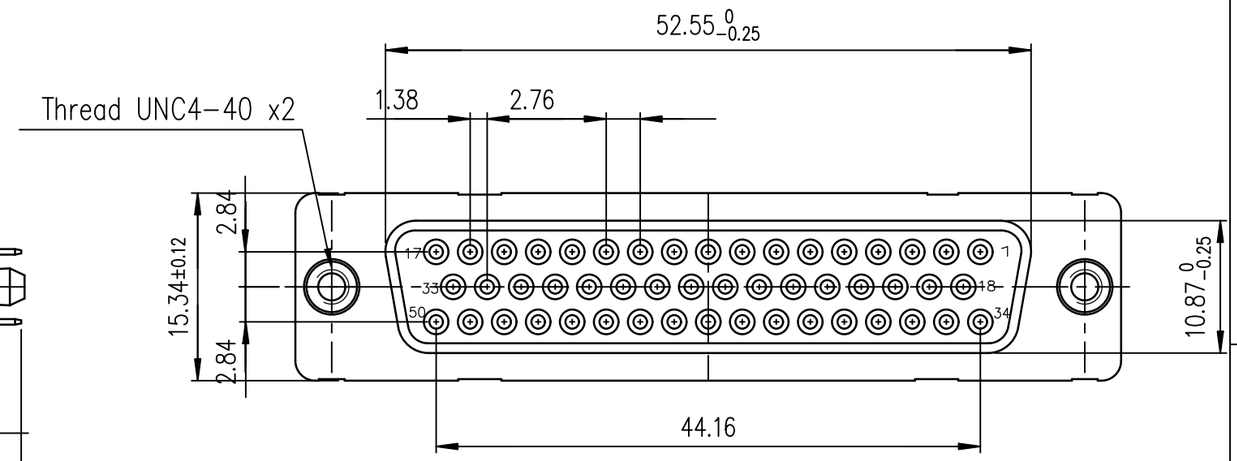

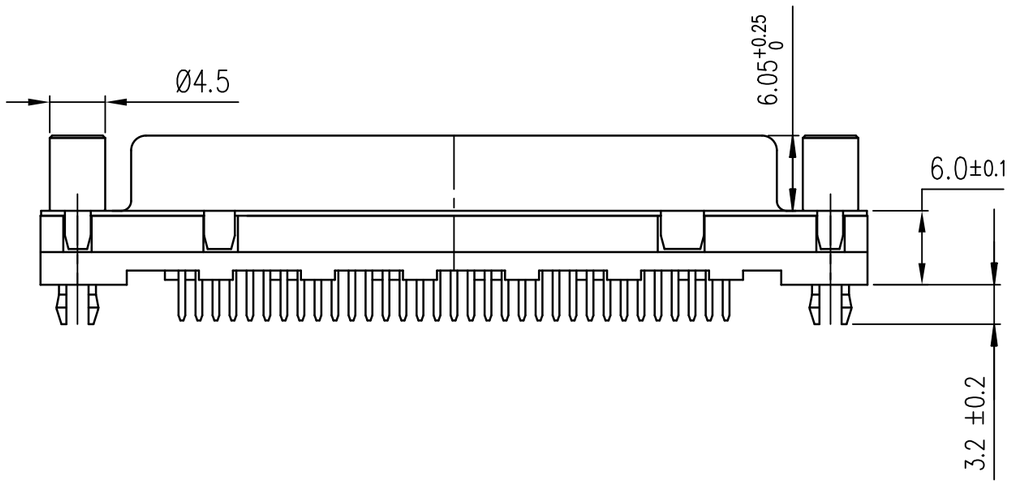

PC CARD DRILLING DIMENSIONS
Thickness 1.6 mm

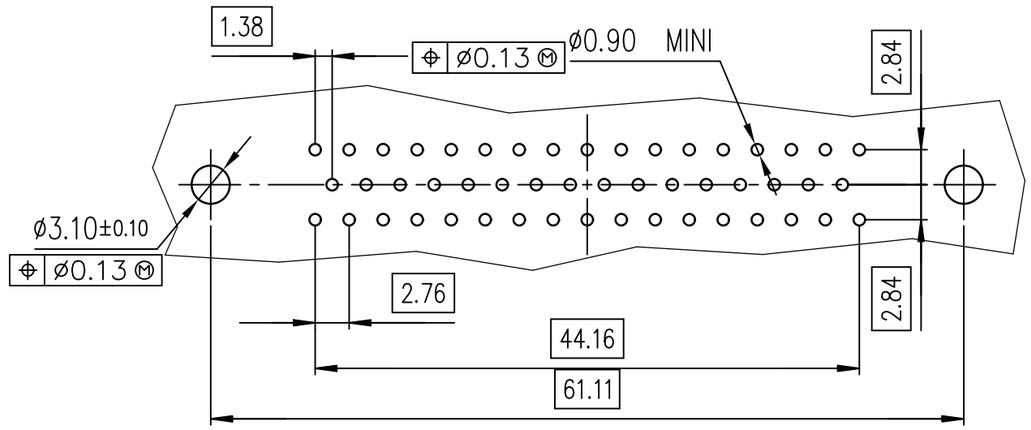

LEAD FREE PART NUMBER

4 –200 MATING CYCLES
6 –500 MATING CYCLES

Part number	D50S24A*GV00LF

GENERAL CHARACTERISTICS AND ROHS INFORMATIONS:
SEE DRAWING C01-8646-0000

mat'l. code SEE NOTES				surface ISO 1302	tolerance ISO 406 ISO 1101	projection	product family D-SUB
ltr	ecn no	dr	date	tolerances unless otherwise specified			title FEMALE CONNECTOR DELTA-D 50 EUROPE STRAIGHT SOLDER, HARPONN, SCREWLOCK
F	ELX-I-281390	GM	2026-03-10	angles	linear .0±.0.30	mm	
					.00±.0.10		
				0°±2°	.000±.05	scale 1:1	
				dr	JOUBERT 1996-08-23	Amphenol FCi	dwg no C01-8646-0479 sheet 1 of 1 size A3
				engr	GREGAR M 2026-03-10		
				chr	GREGAR M 2026-03-10		
				appd	ALEX BABU 2026-03-10		type Product Customer Drawing
sheet index	revision	F					
	sheet	1					

© 2016 AFCI