THIS DRAWING IS UNPUBLISHED. RELEASED FOR PUBLICATION 20
© COPYRIGHT 20 BY - ALL RIGHTS RESERVED.

REVISIONS					
P	LTR	DESCRIPTION	DATE	DWN	APVD
	B8	PCN E-14-010853	18JUL2014	JOAS	GILC
	B9	NEW 3 D DRAWING	26SEP2018	MAH.	GILC
	B10	UPDATED NOTE 2	20SEP2022	KMD	SCK
	B11	UPDATED NOTE 2 FOR TYPO CLARRIFICATION	19JAN2023	KMD	SCK

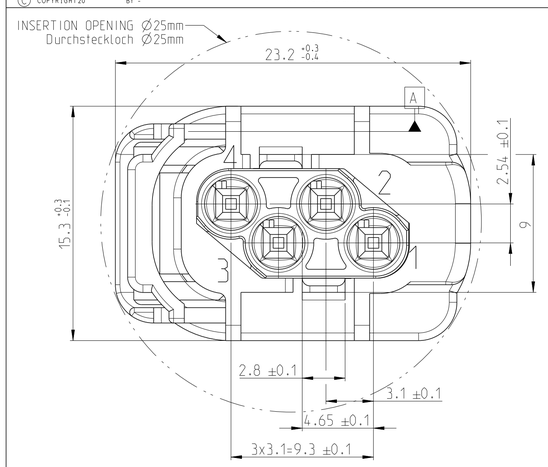

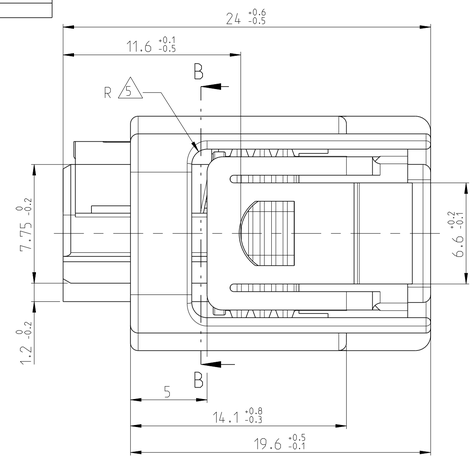

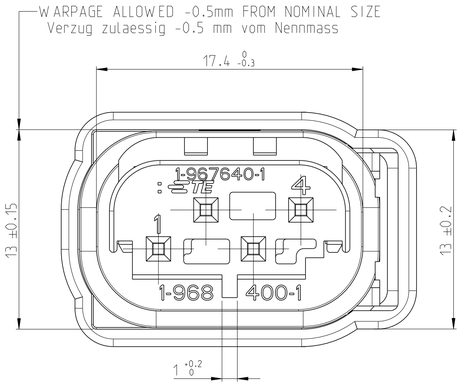

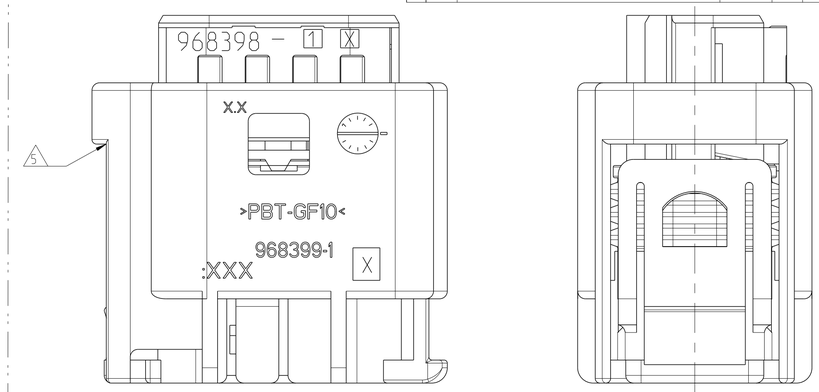

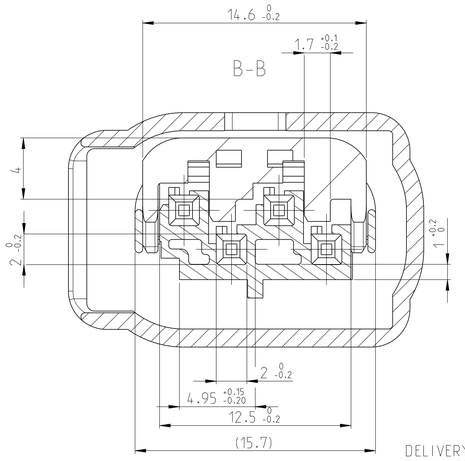

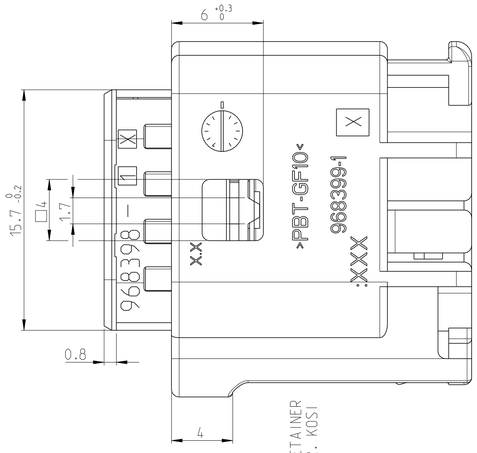

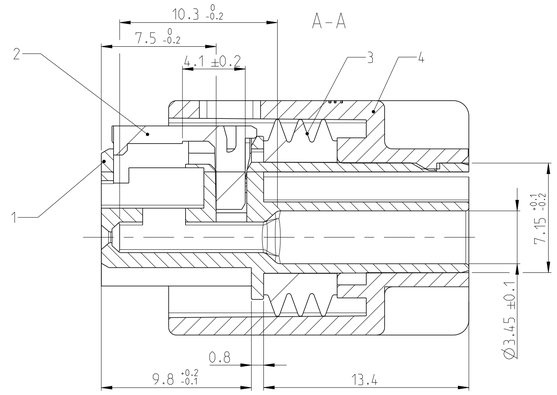

Kodierung B
CODING 2:1

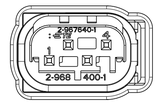

Kodierung C
CODING 2:1

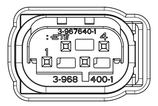

Kodierung D
CODING 2:1

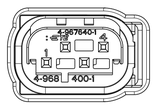

Kodierung E
CODING 2:1

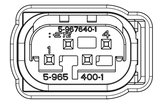

Kodierung F
CODING 2:1

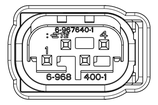

Kodierung Z
CODING 2:1

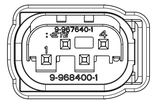

DELIVERY CONDITION
RETAINER IN PRELOCKED POSITION
Lieferzustand
Zweite Kontaktsicherung in Vorraststellung

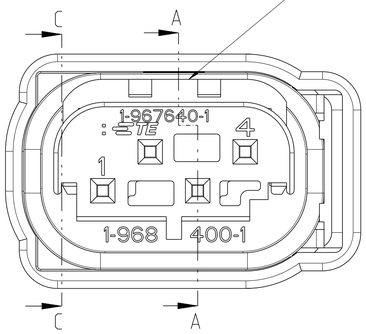

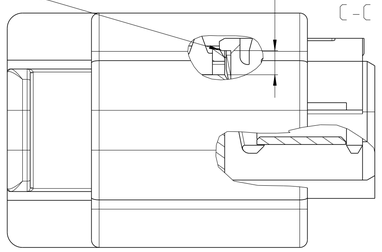

RETAINER IN ENDLOCKED POSITION
Zweite Kontaktsicherung in Endraststellung

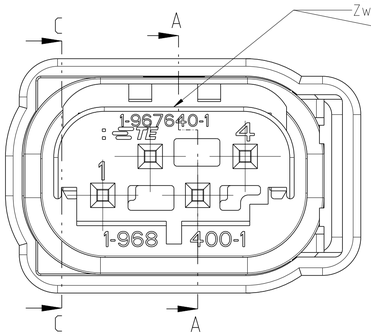

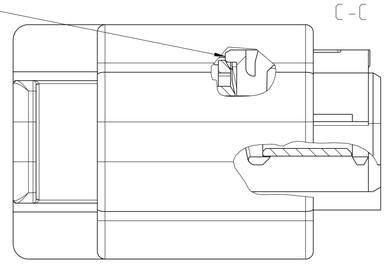

NOTES
Bemerkungen

1 ONLY THE GERMAN LANGUAGE VERSION SHALL BE BINDING
Massgebend ist der deutsche Text

B11 2 SUITABLE FOR SOCKET CONTACT FOR SINGLE WIRE SEALING
TE 962885 (WSR 0.2-0.35mm²), 965906 (WSR 0.75mm²)
Passend zu Buchsenkontakt fuer Einzelleiterdichtungen
TE 962885 (DGB 0.2-0.35mm²), 965906 (DGB 0.75mm²)

3 SUITABLE FOR SHROUDED CONNECTION SEE DRAWING:
TE 114-18063-124.
ALSO COMPATIBLE TE 114-18063-14
Passend zu Kragenanschluss siehe Zeichnung:
TE 114-18063-124.
Auch passend zu TE 114-18063-14

4 SUITABLE FOR WIRE SIZE RANGE TO 0.75mm²
Passend fuer Leitungsquerschnitt bis 0.75mm²

5 EXECUTION DEPENDENT ON INJECTION MOLD
Ausfuehrung abhaengig von Spritzgiesswerkzeug

1:1

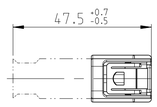

CLUTCH
Kupplung

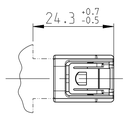

SHROUDED CONNECTION
Kragenanschluss

TE ASSY NO.	REV.	CODE	POS.	QTY.	DESCRIPTION	MATERIAL	COLOR
7-967640-3	B	A	4	1	PROTECTIVE COVER / Schutzkappe	PBT-GF10	YELLOW
			3	1	SEALING / Dichtung	LIQUID SILICONE RUBBER MVQ 30	NATURAL
			2	1	RETAINER / 2. Kontaktsicherung	PBT-GF15	GREEN
			1	1	SOCKET HSG. / Buchsengehaeuse	PBT-GF15	BLACK
9-967640-1	A	Z	4	1	PROTECTIVE COVER / Schutzkappe	PBT-GF10	BLACK
			3	1	SEALING / Dichtung	LIQUID SILICONE RUBBER MVQ 30	NATURAL
			2	1	RETAINER / 2. Kontaktsicherung	PBT-GF15	GREEN
			1	1	SOCKET HSG. / Buchsengehaeuse	PBT-GF15	WATER BLUE
6-967640-1	-	F	4	1	PROTECTIVE COVER / Schutzkappe	PBT-GF10	BLACK
			3	1	SEALING / Dichtung	LIQUID SILICONE RUBBER MVQ 30	NATURAL
			2	1	RETAINER / 2. Kontaktsicherung	PBT-GF15	GREEN
			1	1	SOCKET HSG. / Buchsengehaeuse	PBT-GF15	BROWN
5-967640-1	-	E	4	1	PROTECTIVE COVER / Schutzkappe	PBT-GF10	BLACK
			3	1	SEALING / Dichtung	LIQUID SILICONE RUBBER MVQ 30	NATURAL
			2	1	RETAINER / 2. Kontaktsicherung	PBT-GF15	GREEN
			1	1	SOCKET HSG. / Buchsengehaeuse	PBT-GF15	GREEN
4-967640-1	-	D	4	1	PROTECTIVE COVER / Schutzkappe	PBT-GF10	BLACK
			3	1	SEALING / Dichtung	LIQUID SILICONE RUBBER MVQ 30	NATURAL
			2	1	RETAINER / 2. Kontaktsicherung	PBT-GF15	GREEN
			1	1	SOCKET HSG. / Buchsengehaeuse	PBT-GF15	CLARET VIOLET
3-967640-1	B	C	4	1	PROTECTIVE COVER / Schutzkappe	PBT-GF10	BLACK
			3	1	SEALING / Dichtung	LIQUID SILICONE RUBBER MVQ 30	NATURAL
			2	1	RETAINER / 2. Kontaktsicherung	PBT-GF15	GREEN
			1	1	SOCKET HSG. / Buchsengehaeuse	PBT-GF15	BLUE
2-967640-1	B	B	4	1	PROTECTIVE COVER / Schutzkappe	PBT-GF10	BLACK
			3	1	SEALING / Dichtung	LIQUID SILICONE RUBBER MVQ 30	NATURAL
			2	1	RETAINER / 2. Kontaktsicherung	PBT-GF15	GREEN
			1	1	SOCKET HSG. / Buchsengehaeuse	PBT-GF15	GREY
1-967640-1	B	A	4	1	PROTECTIVE COVER / Schutzkappe	PBT-GF10	BLACK
			3	1	SEALING / Dichtung	LIQUID SILICONE RUBBER MVQ 30	NATURAL
			2	1	RETAINER / 2. Kontaktsicherung	PBT-GF15	GREEN
			1	1	SOCKET HSG. / Buchsengehaeuse	PBT-GF15	BLACK

THIS DRAWING IS A CONTROLLED DOCUMENT.

DIMENSIONS: mm

TOLERANCES UNLESS OTHERWISE SPECIFIED:
0 PLC ±
1 PLC ±
2 PLC ±
3 PLC ±
4 PLC ±
ANGLES ±2°

MATERIAL: SEE TABLE
FINISH: SEE TABLE

n. ISO 8015
n. DIN 16901-140

DWN 08AUG1996 M. Trajkov
CHK 31AUG1998 M. Schwaeger
APVD -
PRODUCT SPEC 108-18272-0
APPLICATION SPEC 114-18061
WEIGHT -

TE Connectivity

NAME: MQS SOCKET HOUSING, SWS, 4 POS. ASSY
MQS Buchsengehaeuse, EDS 4 pol. kompl.

SIZE A1 | CAGE CODE 00779 | DRAWING NO C-967640 | RESTRICTED TO

CUSTOMER DRAWING | SCALE 5:1 | SHEET 1 OF 1 | REV B11

4805 (3/13)