TABLE OF CONTENTS

SHEET NO.	SHEET DESCRIPTION
1	NOTES
2	1x4 RECEPTACLE SEALED ASSEMBLY KEYING CONFIGURATIONS
3	1x6 RECEPTACLE SEALED ASSEMBLY KEYING CONFIGURATIONS
4	RECEPTACLE SEALED ASSEMBLY
5	1x4 RECEPTACLE SEALED ASSEMBLY BOM SHEET
6	1x6 RECEPTACLE SEALED ASSEMBLY BOM SHEET

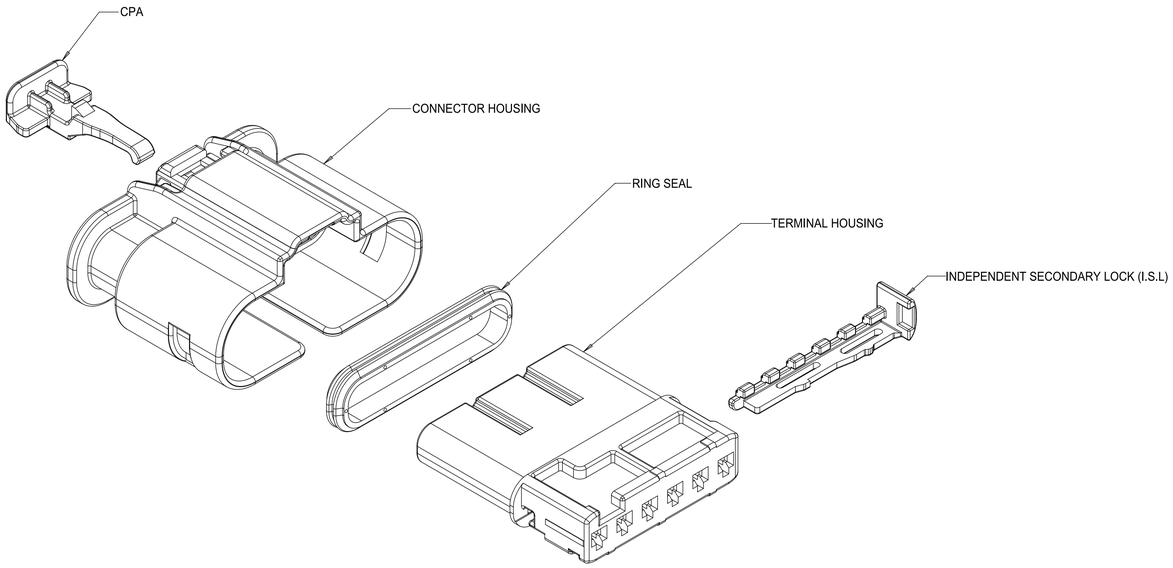

NOTES: VALID UNLESS OTHERWISE SPECIFIED

1. GENERAL:
a. APPLICATION SPECIFICATION SEE: AS-34900-0001
CONTAINS: PRODUCT INTRODUCTION, PRODUCT SUMMARY, CONNECTOR ASSEMBLY, PACKAGING INFORMATION, CONNECTOR MATING, SERVICE INSTRUCTIONS, ELECTRICAL CONTINUITY CHECKING, CRIMPING, AND TROUBLESHOOTING.
b. PRODUCT SPECIFICATION SEE: PS-34900-0001
CONTAINS: PRODUCT INTRODUCTION, PRODUCT SUMMARY, APPROVED TERMINALS, SINGLE WIRE SEALS, RATINGS (CURRENT, TEMPERATURE, SEALING, AND FLAMMABILITY), AND PRODUCT VALIDATION.
c. PACKAGING SPECIFICATION PER MOLEX DRAWING: PK-31301-898
d. PARTS MUST BE IN COMPLIANCE TO MOLEX CHEMICAL SUBSTANCES FOR PRODUCTS AND PACKAGING SPECIFICATION: ES-40000-5016
e. DATA MUST BE SUBMITTED UNDER THE MOLEX PART NUMBER TO IMDS (COMPANY ID#13255)
f. DESIGNED TO MATE WITH DEVICE CONNECTION AS SPECIFIED IN BOM CHART USCAR INTERFACE DRAWINGS AND MODELS ARE AVAILIBLE AT http://ewcap.uscarteams.org/.

2. DESIGN - MATERIALS:
a. SEE BOM TABLE

3. DESIGN - GEOMETRY:
a. THIS IS A 100% CAD GENERATED PART. THE CAD MATHEMATICAL DATA IS THE MASTER FOR THIS PART. FOR DIMENSIONAL OR ANY INFORMATION NOT SHOWN ON THIS DRAWING, ANALYZE THE CAD MODEL.
b. GEOMETRIC DIMENSIONS AND TOLERANCES PER ASME Y14.5M - 1994
c. EDGES AND UNDIMENSIONED DETAILS PER ISO13715
d. CORNERS SHOWN AS SHARP TO BE R 0.2 MAX.
e. LETTERING SHALL BE 0.15 MAX RAISED IN 0.25 MAX RECESS PAD. THIS INCLUDES RECYCLING CODE, CAVITY ID, VENDOR IDENTIFICATION, AND CUSTOMER MATERIAL NUMBER.
f. VISUAL DEFECTS SHALL MEET COSMETIC STANDARD PS-45499-002 (Class B) CAD MODEL.
g. LASER MARKING:
1. PART NUMBER
2. DAY OF THE YEAR
3. SHIFT
4. YEAR

REV	DESCRIPTION
B	ADDED BLUE RESIN HOUSING PART NUMBERS
A15-A17	REMOVED CPA3
A14	UPDATED STATUS, ADDED WIRE DRESS COVERS
A13	NX-REMASTER, ADDED CPA2 PART NUMBERS ABD OBSELETE PAGE
A12	RELEASE ALL KEYS SALEABLE
A11	RELEASE NON SIR SALEABLE
A10	PART #'S WITH NEW LATCH DESIGN SALEABLE
A9	PART #'S WITH NEW LATCH DESIGN SALEABLE
A8	ADDED NEW PART NUMBERS FOR LATCH IMPROVEMENT PARTS
A7	UPDATED 34900-6012 AND 34900-6012 TO SALEBLE
A6	UPDATED SHROUD LENGTH DIMENSION SCHEME
A5	BOM CORRECTIONS AND UPDATES
A4	BOM CORRECTIONS AND UPDATES
A3	NON SIR PART# OK TO TOOL
A2	BOM UPDATES FOR NON-SIR PART #
A1	1X6 MID LENGTH SHROUD OK TO TOOL
A	1X4 INLINE VIEWS ADDED
1	INITIAL RELEASE

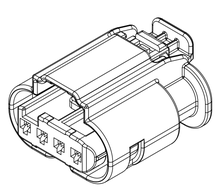

1x4 RECEPTACLE SEALED ASSEMBLY
LONG SHROUD

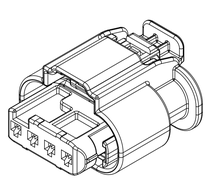

1x4 RECEPTACLE SEALED ASSEMBLY
MID LENGTH SHROUD

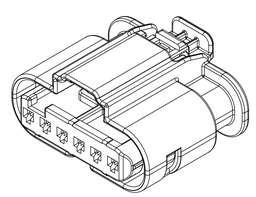

1x6 RECEPTACLE SEALED ASSEMBLY
LONG SHROUD

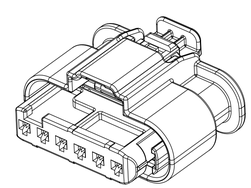

1x6 RECEPTACLE SEALED ASSEMBLY
MID LENGTH SHROUD

QUALITY SYMBOLS	
EA	= 0
EC	= 0
EP	= 0
▼	= 0
C	= 0
☒	= 0
■	= 0
S	= 0

THIS DRAWING CONTAINS INFORMATION THAT IS PROPRIETARY TO MOLEX ELECTRONIC TECHNOLOGIES, LLC AND SHOULD NOT BE USED WITHOUT WRITTEN PERMISSION

ADDED BLUE RESIN PART NUMBERS
EC NO: CO-00002295
DRWN: Manikya MD
CHK'D: Abhishek Gajare
APPR: sandes13
REV: B

GENERAL TOLERANCES (UNLESS SPECIFIED)

ANGULAR TOL	±	3 °
4 PLACES	±	0
3 PLACES	±	0
2 PLACES	±	0.1
1 PLACE	±	0.2
0 PLACES	±	0.5

DRAFT WHERE APPLICABLE MUST REMAIN WITHIN DIMENSIONS

DIMENSION UNITS: MM
SCALE: 3:1
DRWN BY: MVANSLAMBROU
DATE: 2012/05/03
CHK'D BY:
DATE:
APPR BY: GGA
DATE: 2012/12/13
DRAWING SIZE: D
THIRD ANGLE PROJECTION

molex®

1.2MM 1X4, 1X6 RECPT.
SEALED ASSEMBLY CABLE SEAL 626759 - CHANGED CPA2 TO CPA2. ROLLING CHANGE AT GM.

G Customer Product Dwg

SERIES	MATERIAL NUMBER	CUSTOMER
34900	SEE TABLE	GENERAL MARKET

DOCUMENT NUMBER	DOC TYPE	DOC PART	SHEET NUMBER
SD-34900-6001	PSD	001	1 OF 7

RELEASE STATUS		RELEASE DATE	02-Jul-2025

FORMAT: master-format-C
Rev: 2012-05-09
Date: 2012-05-09

1x4 RECEPTACLE SEALED ASSEMBLY KEYING CONFIGURATIONS. FOR PART NUMBERS REFER TO BOM SHEET.

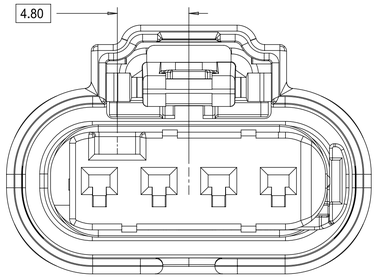

KEYING OPTION A

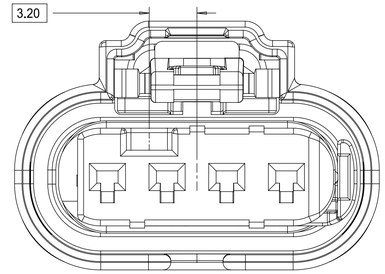

KEYING OPTION E

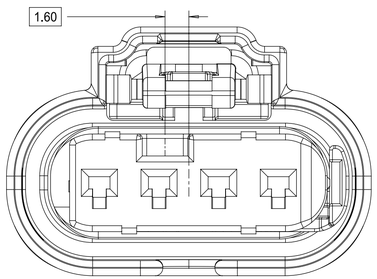

KEYING OPTION B

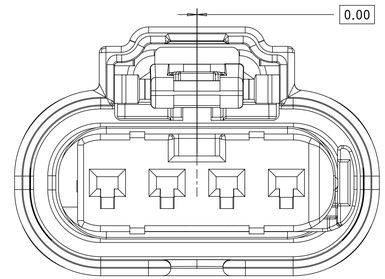

KEYING OPTION F

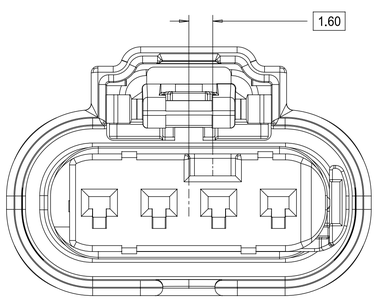

KEYING OPTION C

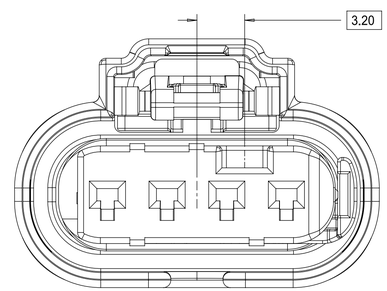

KEYING OPTION G

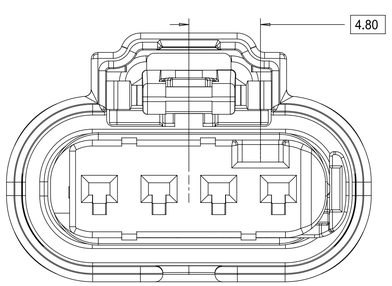

KEYING OPTION D

QUALITY SYMBOLS	
A	= 0
C	= 0
D	= 0
	= 0
E	= 0
	= 0
	= 0
G	= 0

THIS DRAWING CONTAINS INFORMATION THAT IS PROPRIETARY TO MOLEX ELECTRONIC TECHNOLOGIES, LLC AND SHOULD NOT BE USED WITHOUT WRITTEN PERMISSION

ADDED BLUE RESIN PART NUMBERS
EC NO: CO-000027295
DRWN: Manikya MD
CHK'D: Abhishek Gajare
APPR: sandes13
REV: B

GENERAL TOLERANCES (UNLESS SPECIFIED)

ANGULAR TOL ±	3	°
4 PLACES	±	0
3 PLACES	±	0
2 PLACES	±	0.1
1 PLACE	±	0.2
0 PLACES	±	0.5

DRAFT WHERE APPLICABLE MUST REMAIN WITHIN DIMENSIONS

DIMENSION UNITS: MM
SCALE: 5:1
DRWN BY: MVANSLAMBROU
DATE: 2012/05/03
CHK'D BY:
DATE:
APPR BY: GGA
DATE: 2012/12/13
DRAWING SIZE: D
THIRD ANGLE PROJECTION

molex®

1.2MM 1X4, 1X6 RECPT.
SEALED ASSEMBLY CABLE SEAL 626759 - CHANGED CPA2 TO CPA2. ROLLING CHANGE AT GM.

G Customer Product Dwg

SERIES	MATERIAL NUMBER	CUSTOMER
34900	SEE BOM	GENERAL MARKET

DOCUMENT NUMBER	DOC TYPE	DOC PART	SHEET NUMBER
SD-34900-6001	PSD	001	2 OF 7

RELEASE STATUS	RELEASE DATE	02-Jul-2025

TEMPLATE: molex-Sized-D
DOCUMENT: 70
DATE: 2017/02/08

1x6 RECEPTACLE SEALED ASSEMBLY KEYING CONFIGURATIONS. FOR PART NUMBERS REFER TO BOM SHEET.

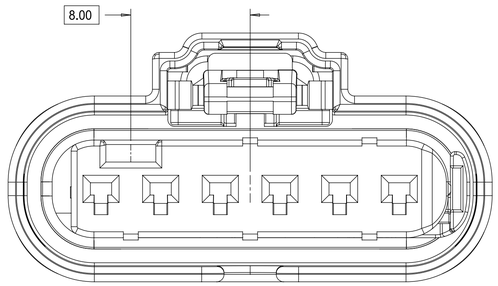

KEYING OPTION A

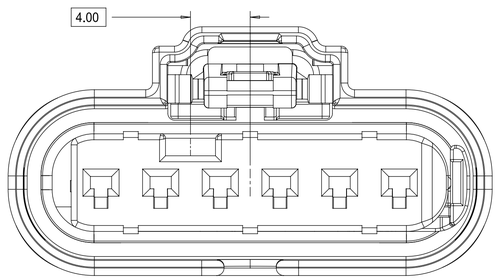

KEYING OPTION B

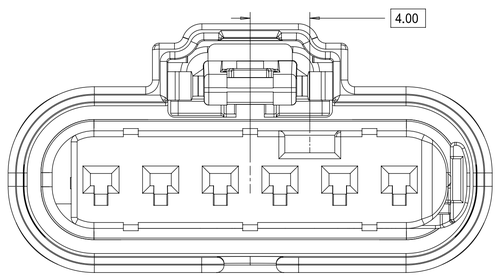

KEYING OPTION C

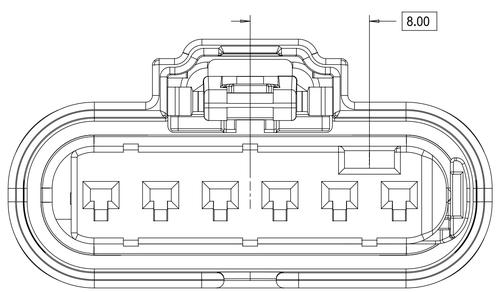

KEYING OPTION D

QUALITY SYMBOLS	
AQL =	0
AQL =	0
AQL =	0
▼ =	0
C =	0
☒ =	0
■ =	0
G =	0

THIS DRAWING CONTAINS INFORMATION THAT IS PROPRIETARY TO MOLEX ELECTRONIC TECHNOLOGIES, LLC AND SHOULD NOT BE USED WITHOUT WRITTEN PERMISSION

ADDED BLUE RESIN PART NUMBERS
EC NO: CO-00002729 5
DRWN: Manikya MD ##########
CHK'D: Abhishek Gajare ##########
APPR: sandes13 ##########
REV B

GENERAL TOLERANCES (UNLESS SPECIFIED)

ANGULAR TOL ±	3	°
4 PLACES	±	0
3 PLACES	±	0
2 PLACES	±	0.1
1 PLACE	±	0.2
0 PLACES	±	0.5

DRAFT WHERE APPLICABLE MUST REMAIN WITHIN DIMENSIONS

DIMENSION UNITS: MM
SCALE: 5:1
DRWN BY: MVANSLAMBROU
DATE: 2012/05/03
CHK'D BY:
DATE:
APPR BY: GGA
DATE: 2012/12/13
DRAWING SIZE: D
THIRD ANGLE PROJECTION

molex®

1.2MM 1X4, 1X6 RECPT.
SEALED ASSEMBLY CABLE SEAL 626759 -
CHANGED CPA2 TO CPA2. ROLLING CHANGE AT GM.

G Customer Product Dwg

SERIES	MATERIAL NUMBER	CUSTOMER
34900	SEE BOM	GENERAL MARKET

DOCUMENT NUMBER	DOC TYPE	DOC PART	SHEET NUMBER
SD-34900-6001	PSD	001	3 OF 7

RELEASE STATUS	RELEASE DATE	02-Jul-2025

TEMPLATE: molex-Sheet-D2
DOCUMENT: SD
DATE: 2017/02/08

RECEPTACLE SEALED ASSEMBLY

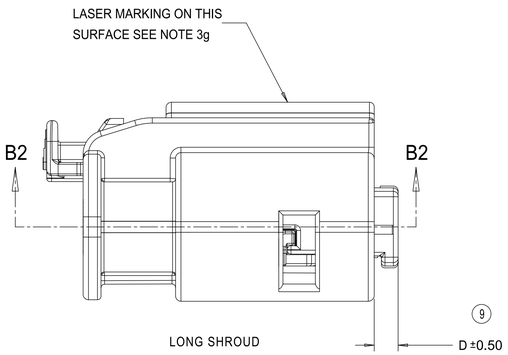

LONG SHROUD

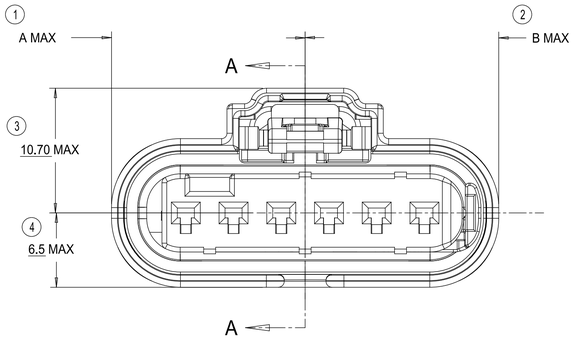

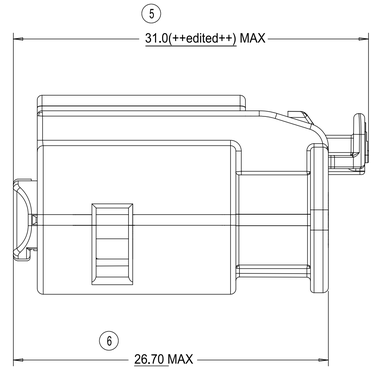

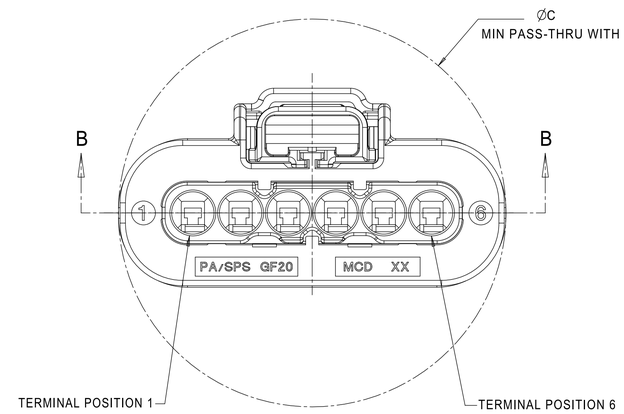

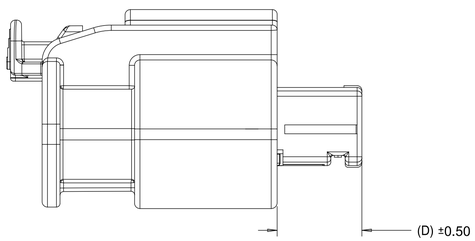

MID LENGTH SHROUD

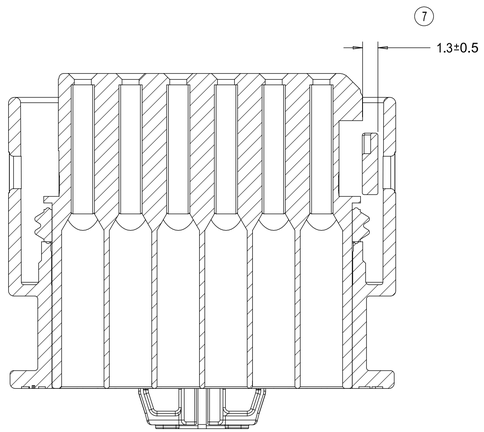

SECTION B-B
INDEPENDENT SECONDARY LOCK (ISL)
SHOWN IN THE PRE-STAGED POSITION

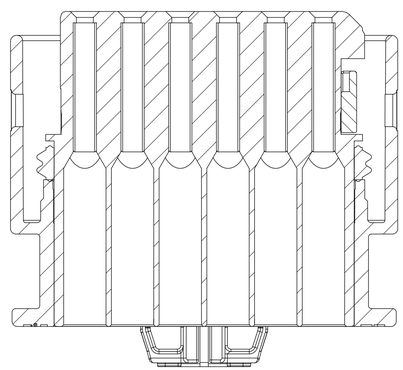

SECTION B2-B2
INDEPENDENT SECONDARY LOCK (ISL)
SHOWN IN THE FINAL-LOCK POSITION

DESCRIPTION	A	B	C	D
1x6 MID LENGTH SHROUD	16.5	16.5	33.0	6.70
1x4 MID LENGTH SHROUD	16.5	16.5	25.0	6.70
1x6 LONG SHROUD	16.5	16.5	33.0	2.00
1x4 LONG SHROUD	12.5	12.5	25.0	2.00

CHARTED DIMENSIONS

QUALITY SYMBOLS
E A = 0
E C = 0
E D = 0
= 0
C = 0
= 0
= 0
G = 0

THIS DRAWING CONTAINS INFORMATION THAT IS PROPRIETARY TO MOLEX ELECTRONIC TECHNOLOGIES, LLC AND SHOULD NOT BE USED WITHOUT WRITTEN PERMISSION

ADDED BLUE RESIN PART NUMBERS
EC NO: CO-000027295 ##########
DRWN: Manikya MD ##########
CHK'D: Abhishek Gajare ##########
APPR: sandes13 ##########
REV B

GENERAL TOLERANCES (UNLESS SPECIFIED)

ANGULAR TOL ±	3	°
4 PLACES	±	0
3 PLACES	±	0
2 PLACES	±	0.1
1 PLACE	±	0.2
0 PLACES	±	0.5

DRAFT WHERE APPLICABLE MUST REMAIN WITHIN DIMENSIONS

DIMENSION UNITS: MM
SCALE: 4:1
DRWN BY: MVANSLAMBROU
DATE: 2012/05/03
CHK'D BY:
DATE:
APPR BY: GGA
DATE: 2012/12/13
DRAWING SIZE: D
THIRD ANGLE PROJECTION

molex®

1.2MM 1X4, 1X6 RECPT.
SEALED ASSEMBLY CABLE SEAL 626759 -
CHANGED CPA2 TO CPA2. ROLLING CHANGE AT GM.

G Customer Product Dwg

SERIES	MATERIAL NUMBER	CUSTOMER
34900	SEE BOM	GENERAL MARKET

DOCUMENT NUMBER	DOC TYPE	DOC PART	SHEET NUMBER
SD-34900-6001	PSD	001	4 OF 7

RELEASE STATUS	RELEASE DATE	02-Jul-2025

1X4 RECEPTACLE SEALED ASSEMBLY BOM SHEET 1

ASSEMBLY DESCRIPTION	CONNECTOR HOUSING COLOR	TERMINAL HOUSING COLOR	OUTER HOUSING SHROUD LENGTH	ASSEMBLY PART NUMBER					A	B	C	D	E	F	G	CPA1	CPA2	PRODUCTION TOOL STATUS	COMMENTS	DESIGNED TO MATE WITH DEVICE CONNECTION	
KEY OPTION A	BLUE	BLACK	LONG	34900-4260			CHC		A								CPA2	SALABLE		1	2
KEY OPTION A	BLUE	BLACK	LONG	34900-4160			CHC		A							CPA1		SALABLE		1	2
KEY OPTION G	BLACK	LIGHT GRAY	LONG	34900-4226		CHB									G		CPA2	SALABLE		1	2
KEY OPTION F	BLACK	BLACK	LONG	34900-4225		CHB								F			CPA2	SALABLE		1	2
KEY OPTION E	BLACK	DARK GRAY	LONG	34900-4224		CHB							E				CPA2	SALABLE		1	2
KEY OPTION D	BLACK	LIGHT GRAY	LONG	34900-4223		CHB						D					CPA2	SALABLE		1	2
KEY OPTION C	BLACK	DARK GRAY	LONG	34900-4222		CHB					C						CPA2	SALABLE		1	2
KEY OPTION B	BLACK	STONE GRAY	LONG	34900-4221		CHB				B							CPA2	SALABLE		1	2
KEY OPTION A	BLACK	BLACK	LONG	34900-4220		CHB			A								CPA2	SALABLE		1	2
KEY OPTION G	YELLOW	LIGHT GRAY	LONG	34900-4216	CHY										G		CPA2	SALABLE		1	2
KEY OPTION F	YELLOW	BLACK	LONG	34900-4215	CHY									F			CPA2	SALABLE		1	2
KEY OPTION E	YELLOW	DARK GRAY	LONG	34900-4214	CHY								E				CPA2	SALABLE		1	2
KEY OPTION D	YELLOW	LIGHT GRAY	LONG	34900-4213	CHY							D					CPA2	SALABLE		1	2
KEY OPTION C	YELLOW	DARK GRAY	LONG	34900-4212	CHY						C						CPA2	SALABLE		1	2
KEY OPTION B	YELLOW	STONE GRAY	LONG	34900-4211	CHY					B							CPA2	SALABLE		1	2
KEY OPTION A	YELLOW	BLACK	LONG	34900-4210	CHY				A								CPA2	SALABLE		1	2
KEY OPTION G	BLACK	LIGHT GRAY	MID LENGTH	34900-4136				CHMB							G		CPA2	CONCEPT		1	2
KEY OPTION F	BLACK	BLACK	MID LENGTH	34900-4135				CHMB						F			CPA2	CONCEPT		1	2
KEY OPTION E	BLACK	DARK GRAY	MID LENGTH	34900-4134				CHMB					E				CPA2	CONCEPT		1	2
KEY OPTION D	BLACK	LIGHT GRAY	MID LENGTH	34900-4133				CHMB				D					CPA2	CONCEPT		1	2
KEY OPTION C	BLACK	DARK GRAY	MID LENGTH	34900-4132				CHMB			C						CPA2	CONCEPT		1	2
KEY OPTION B	BLACK	STONE GRAY	MID LENGTH	34900-4131				CHMB		B							CPA2	CONCEPT		1	2
KEY OPTION A	BLACK	BLACK	MID LENGTH	34900-4130				CHMB	A								CPA2	CONCEPT		1	2
KEY OPTION G	BLACK	LIGHT GRAY	LONG	34900-4126		CHB									G	CPA1		SALABLE		1	2
KEY OPTION F	BLACK	BLACK	LONG	34900-4125		CHB								F		CPA1		SALABLE		1	2
KEY OPTION E	BLACK	DARK GRAY	LONG	34900-4124		CHB							E			CPA1		SALABLE		1	2
KEY OPTION D	BLACK	LIGHT GRAY	LONG	34900-4123		CHB						D				CPA1		SALABLE		1	2
KEY OPTION C	BLACK	DARK GRAY	LONG	34900-4122		CHB					C					CPA1		SALABLE		1	2
KEY OPTION B	BLACK	STONE GRAY	LONG	34900-4121		CHB				B						CPA1		SALABLE		1	2
KEY OPTION A	BLACK	BLACK	LONG	34900-4120		CHB			A							CPA1		SALABLE		1	2
KEY OPTION G	YELLOW	LIGHT GRAY	LONG	34900-4116	CHY										G	CPA1		SALABLE		1	2
KEY OPTION F	YELLOW	BLACK	LONG	34900-4115	CHY									F		CPA1		SALABLE		1	2
KEY OPTION E	YELLOW	DARK GRAY	LONG	34900-4114	CHY								E			CPA1		SALABLE		1	2
KEY OPTION D	YELLOW	LIGHT GRAY	LONG	34900-4113	CHY							D				CPA1		SALABLE		1	2
KEY OPTION C	YELLOW	DARK GRAY	LONG	34900-4112	CHY						C					CPA1		SALABLE		1	2
KEY OPTION B	YELLOW	STONE GRAY	LONG	34900-4111	CHY					B						CPA1		SALABLE		1	2
KEY OPTION A	YELLOW	BLACK	LONG	34900-4110	CHY				A							CPA1		SALABLE		1	2

DESCRIPTION	COLOR	MATERIAL	COMMENTS
RING SEAL	LIGHT BLUE	INHERENTLY LUBRICATED SILICONE	
ISL	NATURAL	SPS/NYLON GF20	
CPA2	RED	PBT GF30	
CPA1	RED	PBT GF30	
TERMINAL HOUSING KEYING OPTION G	LIGHT GRAY	SPS/NYLON GF20	
TERMINAL HOUSING KEYING OPTION F	BLACK	SPS/NYLON GF20	
TERMINAL HOUSING KEYING OPTION E	DARK GRAY	SPS/NYLON GF20	
TERMINAL HOUSING KEYING OPTION D	LIGHT GRAY	SPS/NYLON GF20	
TERMINAL HOUSING KEYING OPTION C	DARK GRAY	SPS/NYLON GF20	
TERMINAL HOUSING KEYING OPTION B	STONE GRAY	SPS/NYLON GF20	
TERMINAL HOUSING KEYING OPTION A	BLACK	SPS/NYLON GF20	
MID LENGTH CONNECTOR HOUSING	BLACK	SPS/NYLON GF20	
CONNECTOR HOUSING	BLUE	SPS/NYLON GF20	UPDATED LATCH
CONNECTOR HOUSING	BLACK	SPS/NYLON GF20	UPDATED LATCH
CONNECTOR HOUSING	YELLOW	SPS/NYLON GF20	UPDATED LATCH
WIRE DRESS COVER STRAIGHT	BLACK	PA66	SOLD SEPARATELY SEE SD-160091-0001
WIRE DRESS COVER LEFT	BLACK	PA66	
WIRE DRESS COVER RIGHT	BLACK	PA66	

BOM/APPLICABLE COMPONENTS TABLE

LEGEND TABLE

ABREVIATION	COMPONENT
CHY	CONNECTOR HOUSING YELLOW
CHB	CONNECTOR HOUSING BLACK
CHC	CONNECTOR HOUSING BLUE(CYAN)
CHBM	CONNECTOR HOUSING BLACK MID SHROUD
A	TERMINAL HOUSING KEY A
B	TERMINAL HOUSING KEY B
C	TERMINAL HOUSING KEY C
D	TERMINAL HOUSING KEY D
E	TERMINAL HOUSING KEY E
F	TERMINAL HOUSING KEY F
G	TERMINAL HOUSING KEY G
CPA1	CPA VERSION 1
CPA2	CPA VERSION 2
ISL	ISL
RING SEAL	RING SEAL
1	USCAR INTERFACE 120-S-004-1-Z02 SEE NOTE 1f FOR WEBSITE
2	MOLEX INLINE BLADE CONNECTOR SD-34899-6001

RELEASE STATUS	RELEASE DATE	02-Jul-2025

QUALITY SYMBOLS: = 0 / = 0 / = 0 / = 0 / = 0 / = 0 / = 0 / = 0

THIS DRAWING CONTAINS INFORMATION THAT IS PROPRIETARY TO MOLEX ELECTRONIC TECHNOLOGIES, LLC AND SHOULD NOT BE USED WITHOUT WRITTEN PERMISSION

ADDED BLUE RESIN PART NUMBERS
EC NO: CO-000027295
DRWN: Manikya MD
CHK'D: Abhishek Gajare
APPR: sandes13
REV: B

GENERAL TOLERANCES (UNLESS SPECIFIED)
ANGULAR TOL ± 3 °
4 PLACES ± 0
3 PLACES ± 0
2 PLACES ± 0.1
1 PLACE ± 0.2
0 PLACES ± 0.5
DRAFT WHERE APPLICABLE MUST REMAIN WITHIN DIMENSIONS

DIMENSION UNITS: MM
SCALE: 5:1
DRWN BY: MVANSLAMBROU
DATE: 2012/05/03
CHK'D BY:
DATE:
APPR BY: GGA
DATE: 2012/12/13
DRAWING SIZE: D
THIRD ANGLE PROJECTION

molex®

1.2MM 1X4, 1X6 RECPT.
SEALED ASSEMBLY CABLE SEAL 626759 - CHANGED CPA2 TO CPA2. ROLLING CHANGE AT GM.

G Customer Product Dwg

SERIES	MATERIAL NUMBER	CUSTOMER
34900	SEE BOM	GENERAL MARKET

DOCUMENT NUMBER	DOC TYPE	DOC PART	SHEET NUMBER
SD-34900-6001	PSD	001	5 OF 7

1X6 RECEPTACLE SEALED ASSEMBLY BOM SHEET 1

ASSEMBLY DESCRIPTION	CONNECTOR HOUSING COLOR	TERMINAL CAVITY COLOR	OUTER HOUSING SHROUD LENGTH	ASSEMBLY PART NUMBER					A	B	C	D	CPA1	CPA2	STATUS	COMMENTS	DESIGNED TO MATE WITH DEVICE CONNECTION		
																	1	2	3
KEYING OPTION A	BLUE	BLACK	LONG	34900-6260			CHC		A					CPA2	SALABLE		1	2	
KEYING OPTION A	BLUE	BLACK	LONG	34900-6160			CHC		A				CPA1		SALABLE		1	2	
KEYING OPTION D	BLACK	STONE GRAY	MID LENGTH	34900-6230				CHMB				D		CPA2	SALABLE		1		3
KEYING OPTION C	BLACK	DARK GRAY	MID LENGTH	34900-6221				CHMB			C			CPA2	SALABLE		1		3
KEYING OPTION B	BLACK	LIGHT GRAY	MID LENGTH	34900-6228				CHMB		B				CPA2	SALABLE		1		3
KEYING OPTION A	BLACK	BLACK	MID LENGTH	34900-6219				CHMB	A					CPA2	SALABLE		1		3
KEYING OPTION D	BLACK	STONE GARY	LONG	34900-6243		CHLB						D		CPA2	SALABLE		1	2	
KEYING OPTION C	BLACK	DARK GRAY	LONG	34900-6242		CHLB					C			CPA2	SALABLE		1	2	
KEYING OPTION B	BLACK	LIGHT GRAY	LONG	34900-6241		CHLB				B				CPA2	SALABLE		1	2	
KEYING OPTION A	BLACK	BLACK	LONG	34900-6240		CHLB			A					CPA2	SALABLE		1	2	
KEYING OPTION D	YELLOW	STONE GRAY	LONG	34900-6213	CHLY							D		CPA2	SALABLE		1	2	
KEYING OPTION C	YELLOW	DARK GRAY	LONG	34900-6212	CHLY						C			CPA2	SALABLE		1	2	
KEYING OPTION B	YELLOW	LIGHT GRAY	LONG	34900-6211	CHLY					B				CPA2	SALABLE		1	2	
KEYING OPTION A	YELLOW	BLACK	LONG	34900-6210	CHLY				A					CPA2	SALABLE		1	2	
KEYING OPTION D	BLACK	STONE GRAY	MID LENGTH	34900-6130				CHMB				D	CPA1		SALABLE		1		3
KEYING OPTION C	BLACK	DARK GRAY	MID LENGTH	34900-6121				CHMB			C		CPA1		SALABLE		1		3
KEYING OPTION B	BLACK	LIGHT GRAY	MID LENGTH	34900-6128				CHMB		B			CPA1		SALABLE		1		3
KEYING OPTION A	BLACK	BLACK	MID LENGTH	34900-6119				CHMB	A				CPA1		SALABLE		1		3
KEYING OPTION D	BLACK	STONE GARY	LONG	34900-6143		CHLB						D	CPA1		SALABLE		1	2	
KEYING OPTION C	BLACK	DARK GRAY	LONG	34900-6142		CHLB					C		CPA1		SALABLE		1	2	
KEYING OPTION B	BLACK	LIGHT GRAY	LONG	34900-6141		CHLB				B			CPA1		SALABLE		1	2	
KEYING OPTION A	BLACK	BLACK	LONG	34900-6140		CHLB			A				CPA1		SALABLE		1	2	
KEYING OPTION D	YELLOW	STONE GRAY	LONG	34900-6113	CHLY							D	CPA1		SALABLE		1	2	
KEYING OPTION C	YELLOW	DARK GRAY	LONG	34900-6112	CHLY						C		CPA1		SALABLE		1	2	
KEYING OPTION B	YELLOW	LIGHT GRAY	LONG	34900-6111	CHLY					B			CPA1		SALABLE		1	2	
KEYING OPTION A	YELLOW	BLACK	LONG	34900-6110	CHLY				A				CPA1		SALABLE		1	2	

DESCRIPTION	COLOR	MATERIAL	COMMENTS
RING SEAL	BURNT RED	INHERENTLY LUBRICATED SILICONE	
ISL	NATURAL	SPS/NYLON GF20	
CPA2	RED	PBT GF30	
CPA1	RED	PBT GF30	
TERMINAL HOUSING KEYING OPTION D	STONE GRAY	SPS/NYLON GF20	
TERMINAL HOUSING KEYING OPTION C	DARK GRAY	SPS/NYLON GF20	
TERMINAL HOUSING KEYING OPTION B	LIGHT GRAY	SPS/NYLON GF20	
TERMINAL HOUSING KEYING OPTION A	BLACK	SPS/NYLON GF20	
CONNECTOR HOUSING MID LENGTH	BLACK	SPS/NYLON GF20	UPDATED LATCH
CONNECTOR HOUSING LONG	BLUE	SPS/NYLON GF20	UPDATED LATCH
CONNECTOR HOUSING LONG	BLACK	SPS/NYLON GF20	UPDATED LATCH
CONNECTOR HOUSING LONG	YELLOW	SPS/NYLON GF20	UPDATED LATCH
WIRE DRESS COVER STRAIGHT	BLACK	PA66	SOLD SEPARATELY SEE SD-160091-0001
WIRE DRESS COVER LEFT	BLACK	PA66	
WIRE DRESS COVER RIGHT	BLACK	PA66	

BOM / APPLICABLE COMPONENTS TABLE

LEGEND TABLE

ABREVIATION	COMPONENT
CHLY	CONNECTOR HOUSING LONG YELLOW
CHLB	CONNECTOR HOUSING LONG BLACK
CHC	CONNECTOR HOUSING BLUE(CYAN)
CHMB	CONNECTOR HOUSING MEDIUM BLACK
A	TERMINAL HOUSING KEY A
B	TERMINAL HOUSING KEY B
C	TERMINAL HOUSING KEY C
D	TERMINAL HOUSING KEY D
CPA1	CPA VERSION 1
CPA2	CPA VERSION 2
ISL	ISL
RING SEAL	RING SEAL
1	USCAR INTERFACE 120-S-006-1-Z02 SEE NOTE 1f FOR WEBSITE
2	MOLEX INLINE BLADE CONNECTOR SD-34899-6001
3	USCAR INTERFACE 120-S-006-1-Z04 SEE NOTE 1f FOR WEBSITE

QUALITY SYMBOLS
= 0
= 0
= 0
= 0
= 0
= 0
= 0
= 0

THIS DRAWING CONTAINS INFORMATION THAT IS PROPRIETARY TO MOLEX ELECTRONIC TECHNOLOGIES, LLC AND SHOULD NOT BE USED WITHOUT WRITTEN PERMISSION

ADDED BLUE RESIN PART NUMBERS
EC NO: CO-000027295
DRWN: Manikya MD
CHK'D: Abhishek Gajare
APPR: sandes13
REV: B

GENERAL TOLERANCES (UNLESS SPECIFIED)

ANGULAR TOL ±	3	°
4 PLACES	±	0
3 PLACES	±	0
2 PLACES	±	0.1
1 PLACE	±	0.2
0 PLACES	±	0.5

DRAFT WHERE APPLICABLE MUST REMAIN WITHIN DIMENSIONS

DIMENSION UNITS: MM
SCALE: 2:1
DRWN BY: MVANSLAMBROU
DATE: 2012/05/03
CHK'D BY:
DATE:
APPR BY: GGA
DATE: 2012/12/13
DRAWING SIZE: D
THIRD ANGLE PROJECTION

molex®

1.2MM 1X4, 1X6 RECPT.
SEALED ASSEMBLY CABLE SEAL 626759 -
CHANGED CPA2 TO CPA2. ROLLING CHANGE AT GM.

G Customer Product Dwg

SERIES	MATERIAL NUMBER	CUSTOMER
34900	SEE TABLE	GENERAL MARKET

DOCUMENT NUMBER	DOC TYPE	DOC PART	SHEET NUMBER
SD-34900-6001	PSD	001	6 OF 7

RELEASE STATUS		RELEASE DATE	02-Jul-2025

FORMAT: 11x8.5-SIZE-C
REVISION: G
DATE: 2017/02/08

OBSELETE PART NUMBERS

ASSEMBLY PART NUMBER	STATUS
34900-4026	OBSELETE
34900-4025	OBSELETE
34900-4024	OBSELETE
34900-4023	OBSELETE
34900-4022	OBSELETE
34900-4021	OBSELETE
34900-4020	OBSELETE
34900-4016	OBSELETE
34900-4015	OBSELETE
34900-4014	OBSELETE
34900-4013	OBSELETE
34900-4012	OBSELETE
34900-4011	OBSELETE
34900-4010	OBSELETE

1X4

ASSEMBLY PART NUMBER	STATUS
34900-6030	OBSELETE
34900-6021	OBSELETE
34900-6028	OBSELETE
34900-6019	OBSELETE
34900-6043	OBSELETE
34900-6042	OBSELETE
34900-6041	OBSELETE
34900-6040	OBSELETE
34900-6013	OBSELETE
34900-6012	OBSELETE
34900-6011	OBSELETE
34900-6010	OBSELETE

1X6

THIS DRAWING CONTAINS INFORMATION THAT IS PROPRIETARY TO MOLEX ELECTRONIC TECHNOLOGIES, LLC AND SHOULD NOT BE USED WITHOUT WRITTEN PERMISSION

DIMENSION UNITS	SCALE
MM	1:1

GENERAL TOLERANCES (UNLESS SPECIFIED)

ANGULAR TOL	±	3 °
4 PLACES	±	0
3 PLACES	±	0
2 PLACES	±	0.1
1 PLACE	±	0.2
0 PLACES	±	0.5

TOOL NUMBER

Material:

Heat treat:

Finish:

CURRENT REV DESC: ADDED BLUE RESIN PART NUMBERS

EC NO:	CO-000027295	
DRWN:	Manikya MD	25-Feb-2025
CHK'D:	Abhishek Gajare	02-Jul-2025
APPR:	sandes13	02-Jul-2025
ORIG DRWN BY:		
MVANSLAMBROU		03-May-2012

THIRD ANGLE PROJECTION | DRAWING: D-SIZE | SERIES: 34900

molex

1.2MM 1X4, 1X6 RECPT.
SEALED ASSEMBLY CABLE SEAL 626759 - CHANGED CPA2 TO CPA2. ROLLING CHANGE AT GM.

PRODUCT CUSTOMER DRAWING

DOCUMENT NUMBER	DOC TYPE	DOC PART	REVISION
SD-34900-6001	PSD	001	B

MATERIAL NUMBER | CUSTOMER: GENERAL MARKET | SHEET NUMBER: 7 OF 7

DOCUMENT STATUS	Production	RELEASE DATE	02-Jul-2025 16:54:53