© 2021 TE Connectivity. All Rights Reserved.

REVISIONS					
P	LTR	DESCRIPTION	DATE	DWN	APVD
	A	REVISED PER ECN-21-111388	02AUG2021	W.H	D.Z
	B	REVISED PER ECR-24-204167	08APR2024	N.H	L.C
	B1	REVISED PER ECR-25-252076	22AUG2025	N.H	J.H

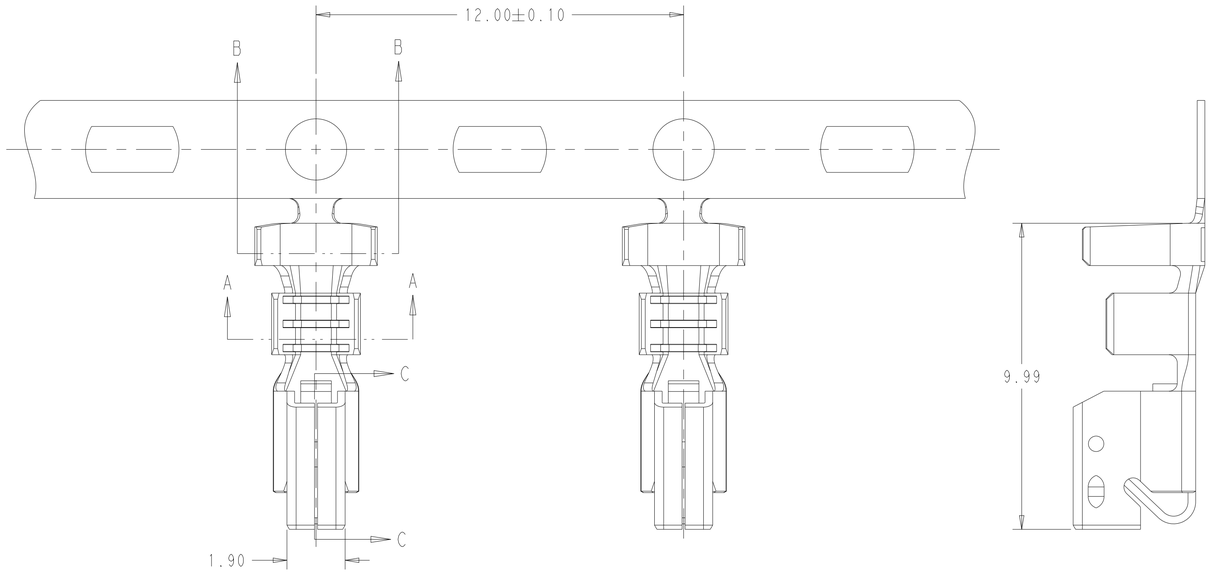

1. MATERIAL: PHOSPHOR BRONZE
   FINISH: PRE-TIN
2. RECOMMENDED MATING PARTS: [ ]-2371377-[ ] OR [ ]-2377130-[ ].
3. CONTACTS COATED WITH ANTI-FRETTING LUBRICANT.
4. PACKAGING: ON REEL
5. REFERENCE CRIMP INFORMATION:
   WIRE RANGE: 18-16 AWG [0.89-1.40MM^2].
   WIRE INSULATION RANGE: 1.70-2.90MM DIA.

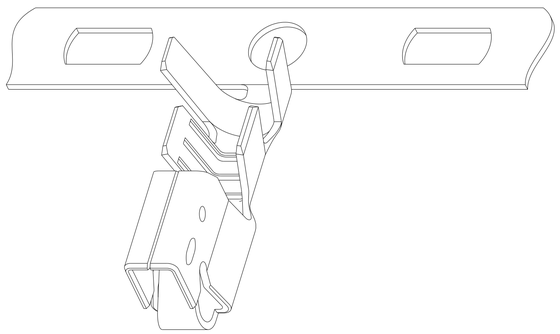

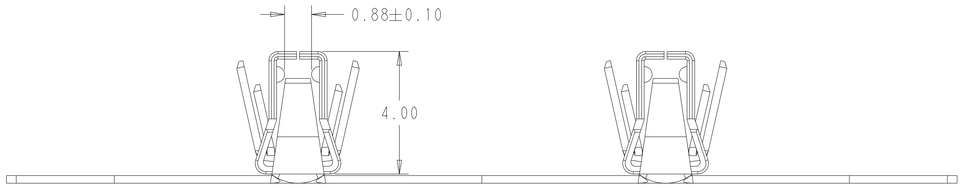

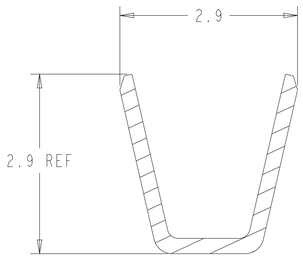

SECTION A-A
SCALE 20:1

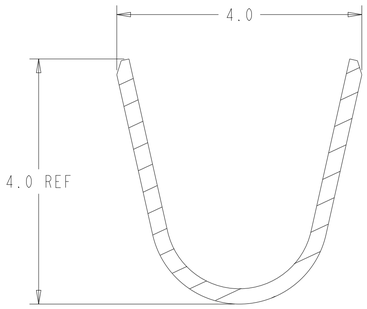

SECTION B-B
SCALE 20:1

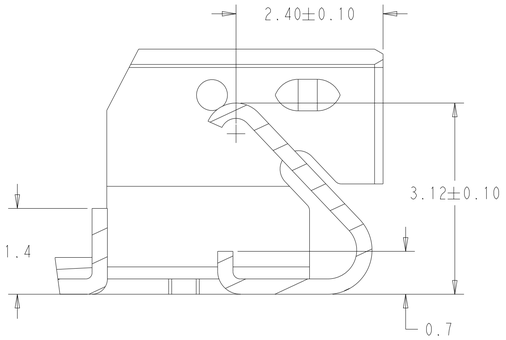

SECTION C-C
SCALE 20:1

3	2377997-1
LUBRICANT	PART NO

THIS DRAWING IS A CONTROLLED DOCUMENT.

DIMENSIONS: mm

TOLERANCES UNLESS OTHERWISE SPECIFIED:
0 PLC ±-
1 PLC ±.25
2 PLC ±.20
3 PLC ±-
4 PLC ±-
ANGLES ±1°

MATERIAL 1
FINISH 1

DWN W. HUO 01JUN2021
CHK D. ZHANG 03JUN2021
APVD D. ZHANG 03JUN2021
PRODUCT SPEC 108-2297
APPLICATION SPEC 114-13265
WEIGHT -

TE Connectivity

NAME RECEPTACLE CONTACT, LANCE-LESS 16-18AWG, ECONOMY POWER II

SIZE	CAGE CODE	DRAWING NO	RESTRICTED TO
A1	00779	C-2377997	-

CUSTOMER DRAWING | SCALE 10:1 | SHEET 1 OF 1 | REV B1

4805 (3/13)