THIS DRAWING IS UNPUBLISHED. RELEASED FOR PUBLICATION -,- .
© COPYRIGHT - By - ALL RIGHTS RESERVED.

| REVISIONS | | | | | |
|---|---|---|---|---|---|
| P | LTR | DESCRIPTION | DATE | DWN | APVD |
| | U3 | REVISED PER ECR-23-181719 | 06AUG2024 | MV | JP |

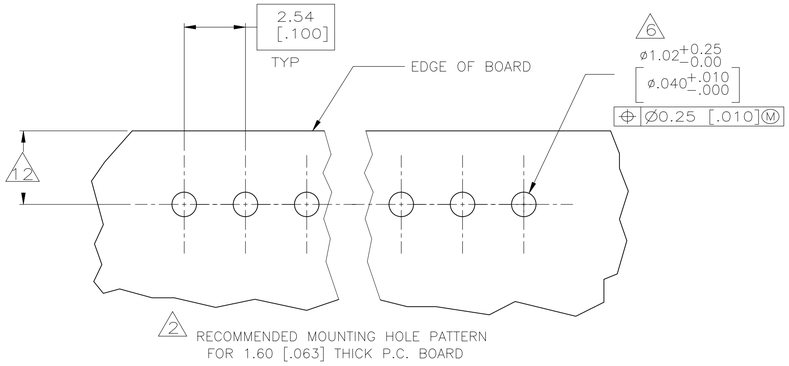


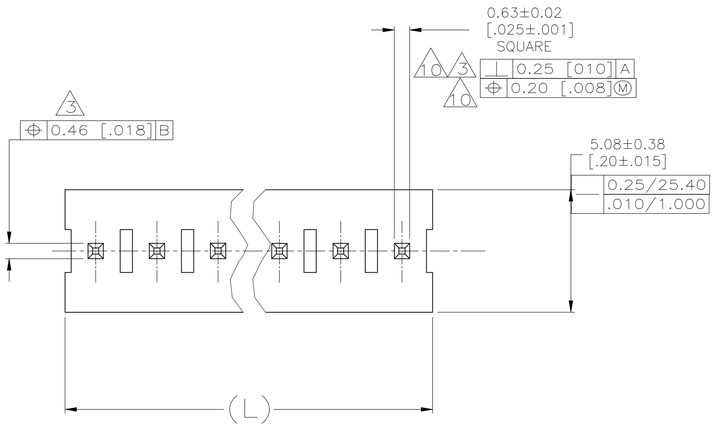


1. POST TO WITHSTAND 13 NEWTONS (3 LBS) MINIMUM AXIAL FORCE IN BOTH DIRECTIONS SHOWN WITHOUT DISLODGING.
2. TOLERANCES APPLY TO SOLDER SIDE OF BOARD.
3. MEASURED AT −A−
4. PLASTIC FLASH PERMITTED IN THIS AREA.
5. PARTS COMPLY WITH AMP SOLDERABILITY SPEC. NO. 109−11−2.
6. ONE HOLE MAY BE UNDERSIZED 0.81−0.89 [.032−.035] DIA. FOR ASSEMBLY RETENTION DURING WAVE SOLDERING.
7. MATERIAL: HEADER−THERMOPLASTIC POLYESTER 94V−0 (NATURAL)
   POST−COPPER ALLOY
   FINISH−USE PLATING NOTES 13 & 14 FOR −2 THRU −28 AND NOTES 13 & 15 FOR −32 THRU −58
8. COORDINATE DIMENSION APPLIES FROM CENTER OF ACTUAL FEATURE.
9. PLASTIC BURRS CAUSED BY CUT−OFF TOOLING ARE PERMITTED WITHIN THE MAXIMUM TOLERANCE ENVELOPE.
10. POSTS TO BE MEASURED WHEN STRIP IS HELD FLAT.
11. POST MUST WITHSTAND TWO 90° BENDS AGAINST EXTRUSION WITHOUT BREAKING.
12. DIMENSION SHOULD BE 3.05 [.120] MIN WHEN MATING WITH A MTA−100 CONNECTOR ASSEMBLY OR A CST−100 CONNECTOR ASSEMBLY.
13. PLATING: GOLD PLATE AREA, 0.00038 [.000015] GOLD OR 0.00008 [.000003] MIN GOLD FLASH OVER 0.00030 [.000012] PALLADIUM NICKEL, PER TE CONNECTIVITY'S DISCRETION, ALL SIDES, OVER NICKEL UNDERPLATE, .00127 [.000050] MIN, ALL SIDES AND ENTIRE LENGTH OF POST.
14. PLATING: BRIGHT TIN/LEAD (93/7) PLATE AREA, 0.00381−0.00889 [.000150−.000350] THICK, ALL FOUR SIDES 3.56 [.140] MINIMUM.
15. PLATING: MATTE TIN PLATE AREA,0.00381−0.00889[.000150−.000350] THICK, ALL FOUR SIDES 3.56 [.140] MINIMUM.
16. OBSOLETE PARTS: OBSOLETE CIS STREAMLINING PER D.RENAUD/D.SINISI

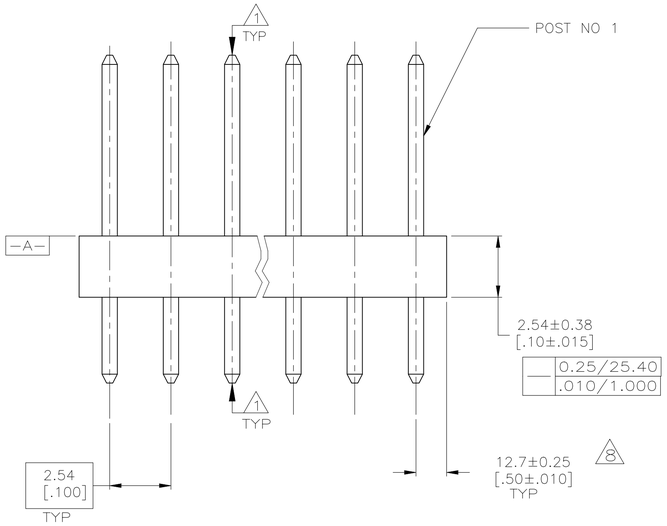


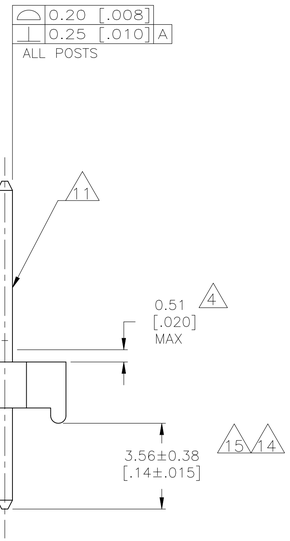


| | LEAD FREE | | | | CONTAINS LEAD | | | |
|---|---|---|---|---|---|---|---|---|
| | DIM (L) | NO.OF POSN | ASSEMBLY | | DIM (L) | NO.OF POSN | ASSEMBLY | |
| | 71.12 [2.800] | 28 | 5−641122−8 | 16 | 71.12 [2.800] | 28 | ~~2−641122−8~~ | SUPERSEDED BY 5−641122−8 |
| | 68.58 [2.700] | 27 | 5−641122−7 | 16 | 68.58 [2.700] | 27 | ~~2−641122−7~~ | SUPERSEDED BY 5−641122−7 |
| | 66.04 [2.600] | 26 | 5−641122−6 | 16 | 66.04 [2.600] | 26 | ~~2−641122−6~~ | SUPERSEDED BY 5−641122−6 |
| | 63.50 [2.500] | 25 | 5−641122−5 | 16 | 63.50 [2.500] | 25 | ~~2−641122−5~~ | SUPERSEDED BY 5−641122−5 |
| | 60.96 [2.400] | 24 | 5−641122−4 | 16 | 60.96 [2.400] | 24 | ~~2−641122−4~~ | SUPERSEDED BY 5−641122−4 |
| | 58.42 [2.300] | 23 | 5−641122−3 | 16 | 58.42 [2.300] | 23 | ~~2−641122−3~~ | SUPERSEDED BY 5−641122−3 |
| | 55.88 [2.200] | 22 | 5−641122−2 | 16 | 55.88 [2.200] | 22 | ~~2−641122−2~~ | SUPERSEDED BY 5−641122−2 |
| | 53.34 [2.100] | 21 | 5−641122−1 | 16 | 53.34 [2.100] | 21 | ~~2−641122−1~~ | SUPERSEDED BY 5−641122−1 |
| | 50.80 [2.000] | 20 | 5−641122−0 | 16 | 50.80 [2.000] | 20 | ~~2−641122−0~~ | SUPERSEDED BY 5−641122−0 |
| | 48.26 [1.900] | 19 | 4−641122−9 | 16 | 48.26 [1.900] | 19 | ~~1−641122−9~~ | SUPERSEDED BY 4−641122−9 |
| | 45.72 [1.800] | 18 | 4−641122−8 | 16 | 45.72 [1.800] | 18 | ~~1−641122−8~~ | SUPERSEDED BY 4−641122−8 |
| | 43.18 [1.700] | 17 | 4−641122−7 | 16 | 43.18 [1.700] | 17 | ~~1−641122−7~~ | SUPERSEDED BY 4−641122−7 |
| | 40.64 [1.600] | 16 | 4−641122−6 | 16 | 40.64 [1.600] | 16 | ~~1−641122−6~~ | SUPERSEDED BY 4−641122−6 |
| | 38.10 [1.500] | 15 | 4−641122−5 | 16 | 38.10 [1.500] | 15 | ~~1−641122−5~~ | SUPERSEDED BY 4−641122−5 |
| | 35.56 [1.400] | 14 | 4−641122−4 | 16 | 35.56 [1.400] | 14 | ~~1−641122−4~~ | SUPERSEDED BY 4−641122−4 |
| | 33.02 [1.300] | 13 | 4−641122−3 | 16 | 33.02 [1.300] | 13 | ~~1−641122−3~~ | SUPERSEDED BY 4−641122−3 |
| | 30.48 [1.200] | 12 | 4−641122−2 | 16 | 30.48 [1.200] | 12 | ~~1−641122−2~~ | SUPERSEDED BY 4−641122−2 |
| | 27.94 [1.100] | 11 | 4−641122−1 | 16 | 27.94 [1.100] | 11 | ~~1−641122−1~~ | SUPERSEDED BY 4−641122−1 |
| | 25.40 [1.000] | 10 | 4−641122−0 | 16 | 25.40 [1.000] | 10 | ~~1−641122−0~~ | SUPERSEDED BY 4−641122−0 |
| | 22.86 [.900] | 9 | 3−641122−9 | 16 | 22.86 [.900] | 9 | ~~641122−9~~ | SUPERSEDED BY 3−641122−9 |
| | 20.32 [.800] | 8 | 3−641122−8 | 16 | 20.32 [.800] | 8 | ~~641122−8~~ | SUPERSEDED BY 3−641122−8 |
| | 17.78 [.700] | 7 | 3−641122−7 | 16 | 17.78 [.700] | 7 | ~~641122−7~~ | SUPERSEDED BY 3−641122−7 |
| OBSOLETE | 15.24 [.600] | 6 | ~~3−641122−6~~ | 16 | 15.24 [.600] | 6 | ~~641122−6~~ | SUPERSEDED BY 3−641122−6 |
| | 12.70 [.500] | 5 | 3−641122−5 | 16 | 12.70 [.500] | 5 | ~~641122−5~~ | SUPERSEDED BY 3−641122−5 |
| | 10.16 [.400] | 4 | 3−641122−4 | | 10.16 [.400] | 4 | 641122−4 | |
| | 7.62 [.300] | 3 | 3−641122−3 | 16 | 7.62 [.300] | 3 | ~~641122−3~~ | SUPERSEDED BY 3−641122−3 |
| | 5.08 [.200] | 2 | 3−641122−2 | 16 | 5.08 [.200] | 2 | ~~641122−2~~ | SUPERSEDED BY 3−641122−2 |

THIS DRAWING IS A CONTROLLED DOCUMENT.

DIMENSIONS: mm [INCHES]

TOLERANCES UNLESS OTHERWISE SPECIFIED:
0 PLC ±
1 PLC ±
2 PLC ± 0.13 [.025]
3 PLC ±
4 PLC ±
ANGLES ±

MATERIAL 7 | FINISH 7

| | | |
|---|---|---|
| DWN | S. HOOVER | 26−JAN−2005 |
| CHK | D. BOSSI | 26−JAN−2005 |
| APVD | D. BOSSI | 26−JAN−2005 |
| PRODUCT SPEC | − | |
| APPLICATION SPEC | − | |
| WEIGHT | − | |

TE Connectivity

NAME: MTA− .100 HDR ASSY, PLAIN, .025 SQUARE STRAIGHT POST .000015 GOLD PLATED

| SIZE | CAGE CODE | DRAWING NO | RESTRICTED TO |
|---|---|---|---|
| A1 | 00779 | C−641122 | |

CUSTOMER DRAWING | SCALE 8:1 | SHEET 1 OF 1 | REV U3

4805 (1/15)