MAT'L NO (LOOSE PC)	ENG NO (LOOSE PC)	MAT'L NO (ON STRIP)	ENG NO (ON STRIP)	MAT'L NO (ON TAPE)	ENG NO (ON TAPE)	WIRE GAGE	FITS MALE TAB	COLOR	"A" MAX	∅"B" MIN	"C" MAX	MWID	"E" MAX	"H" REF
190030071	M-2212	190030106	M-2212C	190030073	M-2212T	26-24	.250 x .032 (6.35 x 0.81)	YELLOW	.86 (21.8)	.028 (0.71)	.38 (9.7)	.075 (1.91)	.18 (4.6)	1.42 (36.1)
190030064	M-2210	190030103	M-2210C	190030067	M-2210T		.187 x .020 (4.75 x 0.51)	YELLOW	.78 (19.8)		.32 (8.1)		.16 (4.1)	1.38 (35.1)
190030068	M-2211	190030104	M-2211C	190030070	M-2211T		.187 x .032 (4.75 x 0.81)	DK YELLOW						
190030001	AA-2201	190030105	AA-2201C	190030003	AA-2201T	22-18	.250 x .032 (6.35 x 0.81)	SALMON	.86 (21.8)	.056 (1.42)	.38 (9.7)	.135 (3.43)	.18 (4.6)	1.42 (36.1)
190030036	AA-2213	190030109	AA-2213C	190030074	AA-2213T		.205 x .020 (5.21 x 0.51)	SALMON	.78 (19.8)		.32 (8.1)		.16 (4.1)	1.38 (35.1)
190030038	AA-2214	190030110	AA-2214C	190030075	AA-2214T		.205 x .032 (5.21 x 0.81)	PINK						
190030011	AA-2202	190030107	AA-2202C	190030013	AA-2202T		.187 x .020 (4.75 x 0.51)	SALMON						
190030017	AA-2203	190030108	AA-2203C	190030020	AA-2203T		.187 x .032 (4.75 x 0.81)	PINK						
190030024	AA-2204	190030097	AA-2204C	190030026	AA-2204T		.110 x .020 (2.79 x 0.51)	SALMON			.23 (5.8)		.15 (3.8)	1.39 (35.3)
190030030	AA-2205	190030098	AA-2205C	190030032	AA-2205T		.110 x .032 (2.79 x 0.81)	PINK						
190030040*	BB-2206	190030041*	BB-2206C	190030042*	BB-2206T	16-14	.250 x .032 (6.35 x 0.81)	BLUE	.86 (21.8)	.079 (2.01)	.38 (9.7)	.160 (4.06)	.18 (4.6)	1.41 (35.8)
190030062*	BB-2215	190030085*	BB-2215C	190030077*	BB-2215T		.205 x .020 (5.21 x 0.51)	BLUE	.78 (19.8)		.32 (8.1)		.17 (4.3)	
190030063*	BB-2216	190030086*	BB-2216C	190030078*	BB-2216T		.205 x .032 (5.21 x 0.81)	AQUA						
190030050*	BB-2207	190030051*	BB-2207C	190030052*	BB-2207T		.187 x .020 (4.75 x 0.51)	BLUE						
190030056*	BB-2208	190030057*	BB-2208C	190030058*	BB-2208T		.187 x .032 (4.75 x 0.81)	AQUA						
196060002	C-2293	196060001	C-2293C	196060003	C-2293T	12-10	.250 x .032 (6.35 x 0.81)	YELLOW	1.03 (26.2)	.117 (2.97)	.38 (9.7)	.235 (5.97)	.22 (5.6)	1.53 (38.9)

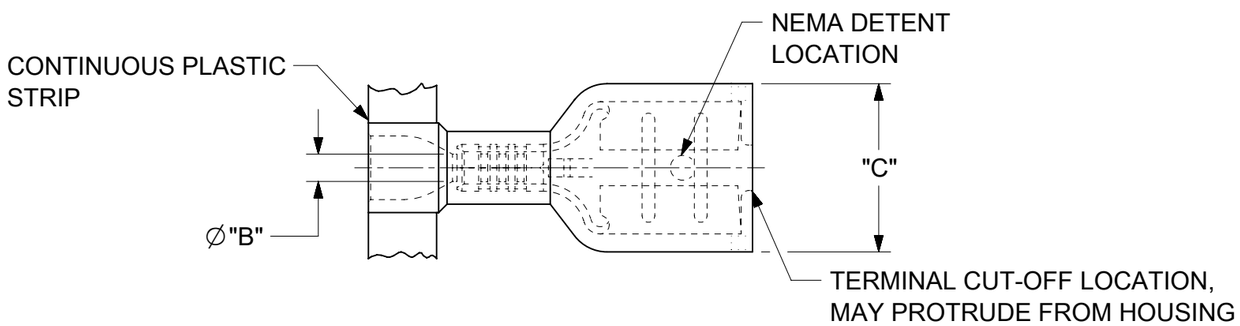

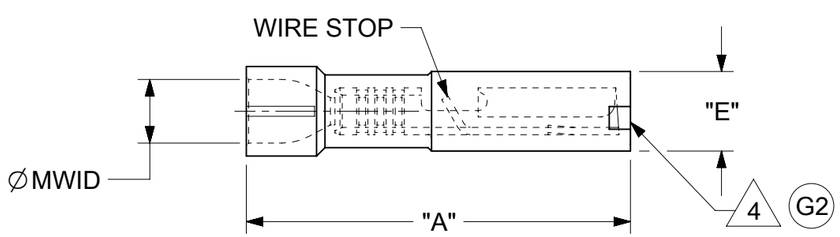

ASSY P/N'S WITH AN ASTERISK "*" ONLY.
(HOUSING FEATURES AS SHOWN)

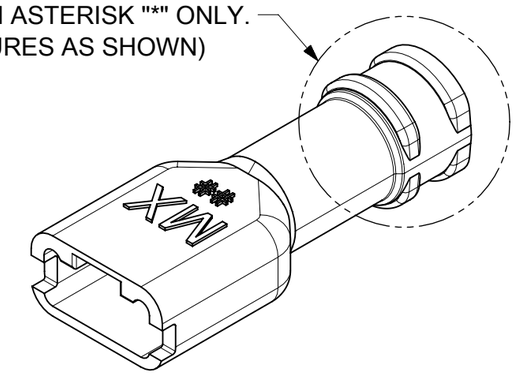

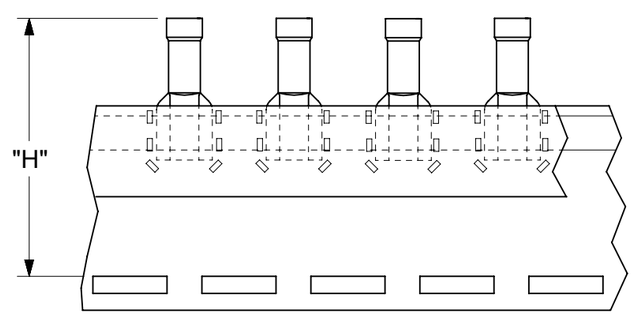

PARTS ON TAPE

NOTE(S):

1. MATERIAL:
   TERMINAL: TIN PLATED BRASS
   FERRULE: TIN PLATED BRASS
   INSULATION: NYLON 6/6 94V-2, SEE CHART FOR COLOR.
2. MWID = MAXIMUM WIRE INSULATION DIAMETER.
3. MUST BE RoHS COMPLIANT.
4. THIN MEMBRANE MAY BE PRESENT IN TAB CUT-OUT.

DOCUMENT STATUS	P1	RELEASE DATE	2026/01/14 15:13:24

FORMAT: Eng-lega-master-tb-prod-B
REVISION: E
DATE: 2020/01/14

FUNCTIONAL SYMBOLS: E/A = 0; E/C = 0; E/P = 0
DIVISIONAL SYMBOLS

THIS DRAWING CONTAINS INFORMATION THAT IS PROPRIETARY TO MOLEX ELECTRONIC TECHNOLOGIES, LLC AND SHOULD NOT BE USED WITHOUT WRITTEN PERMISSION

DIMENSION UNITS: INCH/MM
SCALE: NTS

GENERAL TOLERANCES (UNLESS SPECIFIED)

	MM	INCH
4 PLACES	±	±
3 PLACES	±	±
2 PLACES	±	±
1 PLACE	±	±
0 PLACES	±	±
ANGULAR TOL	± °	

DRAFT WHERE APPLICABLE MUST REMAIN WITHIN DIMENSIONS

CURRENT REV DESC: ADDED FLAG 4

EC NO: 844661
DRWN: DEANNM1 2026/01/12
CHK'D: ETHRODAHL 2026/01/14
APPR: ETHRODAHL 2026/01/14

INITIAL REVISION:
DRWN: BENDERLE 2002/04/02
APPR: RDEROSS 2002/04/03

THIRD ANGLE PROJECTION
DRAWING: B-SIZE
SERIES: 19003

molex

INSULKRIMP FEMALE
FIQD STANDARD FLARE

PRODUCT CUSTOMER DRAWING

DOCUMENT NUMBER	DOC TYPE	DOC PART	REVISION
SD-19003-005	PSD	001	G2

MATERIAL NUMBER	CUSTOMER	SHEET NUMBER
SEE CHART	GENERAL MARKET	1 OF 1