NOTES:

1. HOUSING MATERIAL : GLASS FILLED LIQUID CRYSTAL POLYMER (LCP);
   UL RATING: 94V-0; COLOR: WHITE
   TERMINAL MATERIAL: PHOSPHOR BRONZE
   VACUUM CAP MATERIAL: STAINLESS STEEL
2. COPLANARITY OF SMT TAILS: 0.10 MAX.
3. PACKAGING SPECIFICATION : REFER TO CHART
4. THIS PART, WHEN MATED WITH MOLEX U.S.PART NO. 71741-0*** OR MOLEX JAPAN PART NO. 53543-0849, CONFORMS TO MOLEX PRODUCT SPECIFICATION PS-71741-9999.

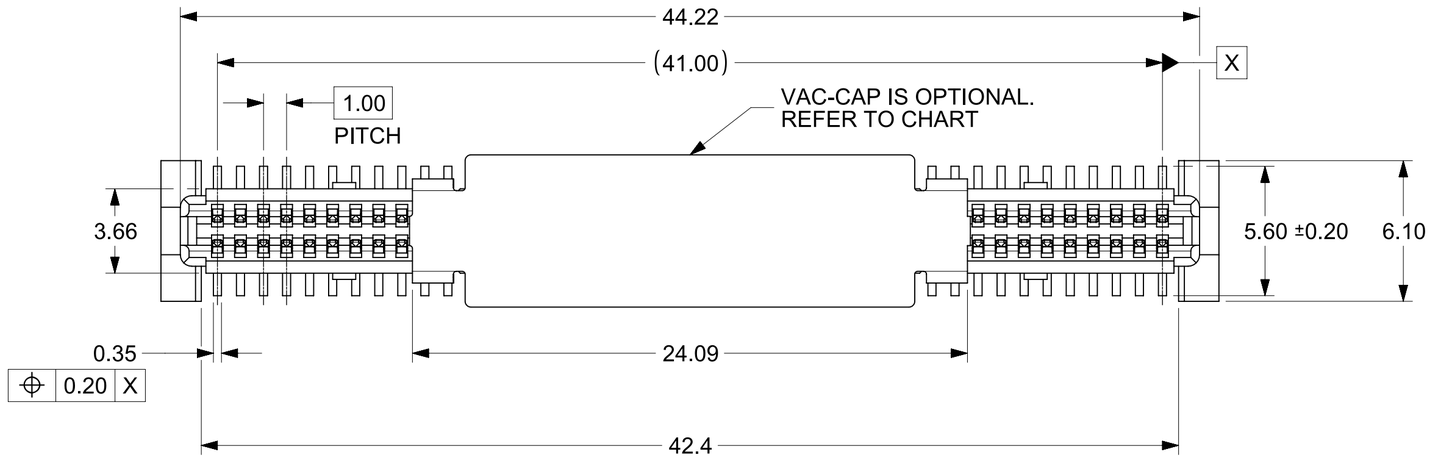

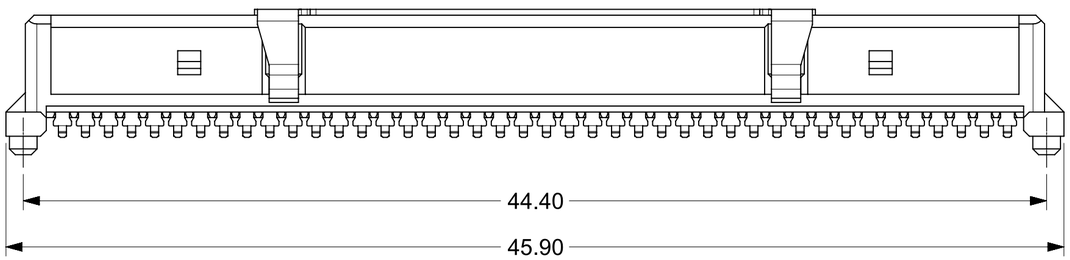

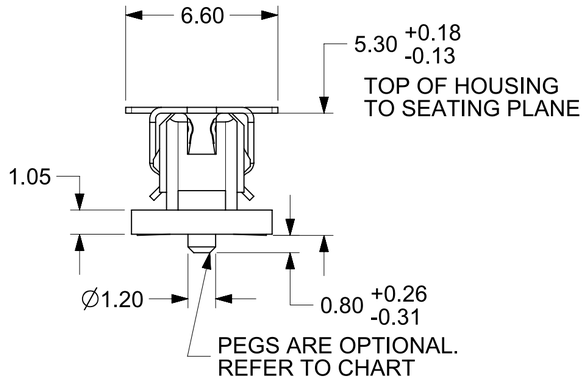

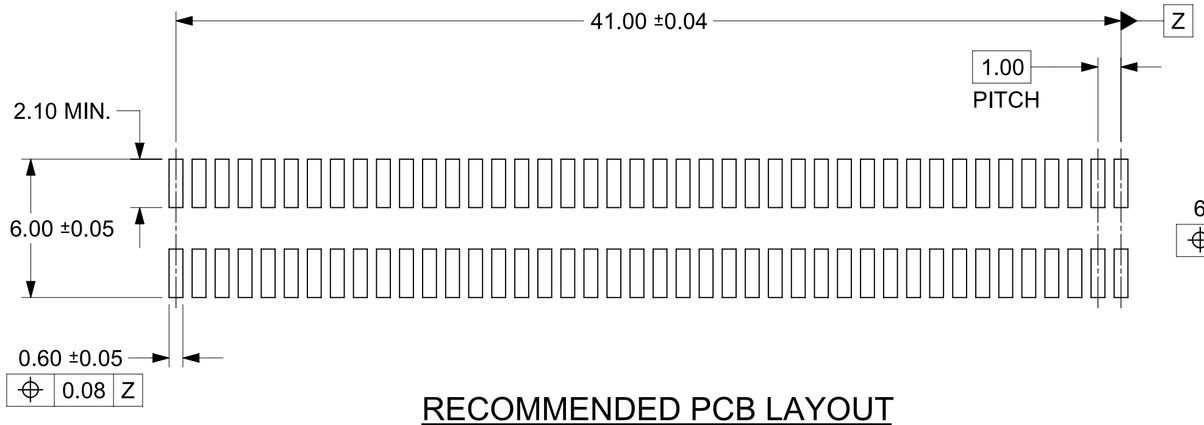

RECOMMENDED PCB LAYOUT

RECOMMENDED PCB THICKNESS: 1.0±0.1 mm MIN.

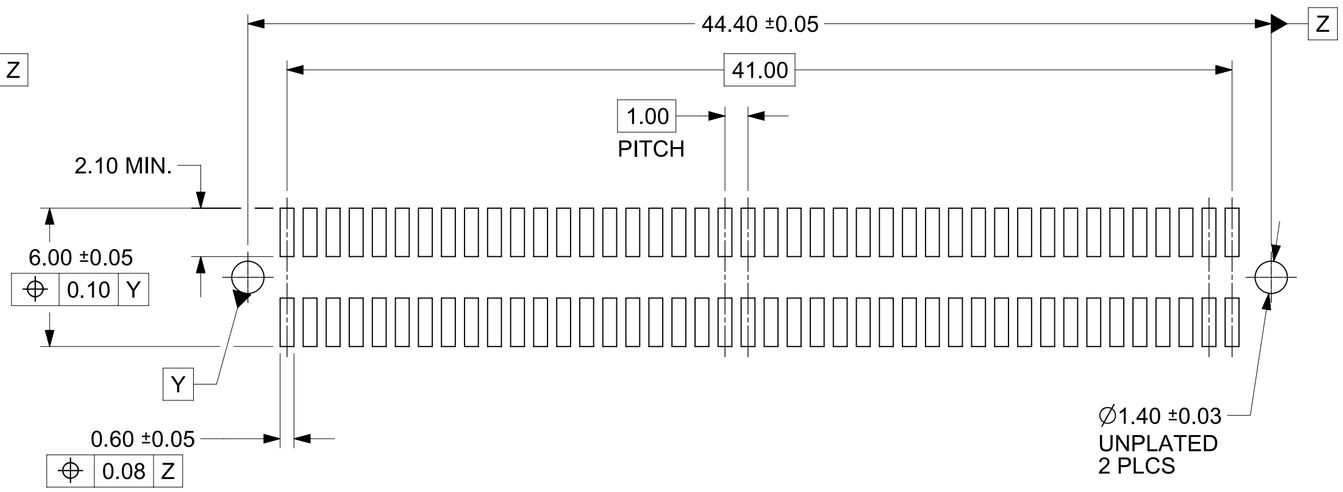

RECOMMENDED PCB LAYOUT WITH PEGS

RECOMMENDED PCB THICKNESS: 1.0±0.1 mm MIN.

PLATINGS:

X21 - .76 MICROMETERS MINIMUM GOLD PLATE IN SELECT AREA, 1.91 MICROMETERS MINIMUM TIN PLATE IN SELECT AREA, OVER NICKEL UNDERPLATE.

X71 - .25 MICROMETERS MINIMUM GOLD PLATE IN SELECT AREA, 1.02 MICROMETERS MINIMUM TIN PLATE IN SELECT AREA, OVER NICKEL UNDERPLATE.

THIS DRAWING CONTAINS INFORMATION THAT IS PROPRIETARY TO MOLEX ELECTRONIC TECHNOLOGIES, LLC AND SHOULD NOT BE USED WITHOUT WRITTEN PERMISSION

FUNCTIONAL SYMBOLS	DIMENSION UNITS	SCALE	CURRENT REV DESC: REMOVED OBSOLETED PART NUMBERS AS PER PCN#515181	molex
FA = 0	MM	5:1		
FC = 0	GENERAL TOLERANCES (UNLESS SPECIFIED)			SALES ASSY, 1.0MM 84 CKT BTB RECEPTACLE CONNECTOR 5.30 STACK HEIGHT
FP = 0	ANGULAR TOL ± 0.5°			
DIVISIONAL SYMBOLS	4 PLACES ±			PRODUCT CUSTOMER DRAWING
	3 PLACES ±		STATUS: Production	
	2 PLACES ± 0.180		DRWN: Vishal Ramesh Hosur 2024-06-19	DOCUMENT NUMBER 717420000 / DOC TYPE PSD / DOC PART 000 / REVISION A2
	1 PLACE ± 0.33		CHK'D: Ganesh Rao B 2024-08-20	
	0 PLACES ±		APPR: Gurunandan GA 2024-08-20	
	DRAFT WHERE APPLICABLE MUST REMAIN WITHIN DIMENSIONS		THIRD ANGLE PROJECTION / DRAWING C-SIZE / SERIES 71742	MATERIAL NUMBER SEE TABLE / CUSTOMER GENERAL MARKET / SHEET NUMBER 1 OF 2

FORMAT: TC-6-prod-C
REVISION: B
DATE: 2022/08/01

MATERIAL NUMBER	PEGS	PICK & PLACE CAP	PACKAGING SPEC. NUMBER	PACKAGING TYPE	TERMINAL PLATING SEE SHEET 1
71742-0006	YES	YES	PK-70873-063	TAPE & REEL	X21
71742-0004	YES	NO	PK-70873-013	TUBE	X71
71742-0003	YES	YES	PK-70873-063	TAPE & REEL	X71
71742-0002	NO	NO	PK-70873-015	TUBE	X71
71742-0001	NO	YES	PK-70873-063	TAPE & REEL	X71

RECOMMENDED PLUG/RECEPTACLE COMBINATION FOR MATED STACK HEIGHT PER EIA STANDARD 700 AAAB

MATED STACK HEIGHT	RECEPTACLE HEIGHT	RECEPTACLE SERIES NO.	PLUG HEIGHT	PLUG SERIES NO.
8.00	5.30	71742-0***	2.30	71741-2***
10.00	5.30	71742-0***	4.30	71741-0***

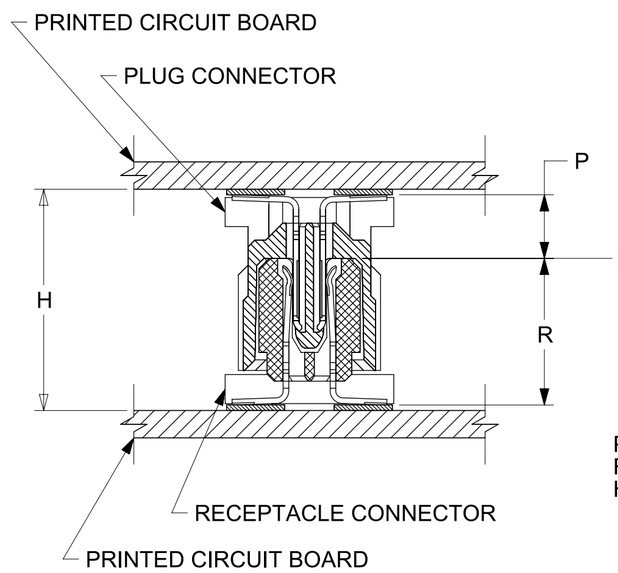

PLUG STACK HEIGHT
+ RECEPTACLE STACK HEIGHT
+ 0.40 (SOLDER PASTE ALLOWANCE)
= MATED STACK HEIGHT

P = PLUG STACK HEIGHT
R = RECEPTACLE STACK HEIGHT
H = MATED STACK HEIGHT

THIS DRAWING CONTAINS INFORMATION THAT IS PROPRIETARY TO MOLEX ELECTRONIC TECHNOLOGIES, LLC AND SHOULD NOT BE USED WITHOUT WRITTEN PERMISSION

FUNCTIONAL SYMBOLS: FA = 0, FC = 0, FP = 0
DIVISIONAL SYMBOLS

DIMENSION UNITS: MM
SCALE: 5:1

GENERAL TOLERANCES (UNLESS SPECIFIED)

ANGULAR TOL	± 0.5°
4 PLACES	±
3 PLACES	±
2 PLACES	± 0.180
1 PLACE	± 0.33
0 PLACES	±

DRAFT WHERE APPLICABLE MUST REMAIN WITHIN DIMENSIONS

CURRENT REV DESC: REMOVED OBSOLETED PART NUMBERS AS PER PCN#515181

STATUS: Production
DRWN: Vishal Ramesh Hosur 2024-06-19
CHK'D: Ganesh Rao B 2024-08-20
APPR: Gurunandan GA 2024-08-20

THIRD ANGLE PROJECTION | DRAWING: C-SIZE | SERIES: 71742

molex

SALES ASSY, 1.0MM 84 CKT BTB
RECEPTACLE CONNECTOR 5.30 STACK HEIGHT

PRODUCT CUSTOMER DRAWING

DOCUMENT NUMBER	DOC TYPE	DOC PART	REVISION
717420000	PSD	000	A2

MATERIAL NUMBER	CUSTOMER	SHEET NUMBER
SEE TABLE	GENERAL MARKET	2 OF 2

FORMAT: TC-0-prod-C
REVISION: B
DATE: 2022/08/01