TABLE OF CONTENTS


| | |
|---|---|
| 1 | NOTES |
| 2 | DIMENSIONAL CHART FOR MULTIBAY CONFIGURATION |
| 3 | DIMENSIONAL CHART FOR MULTIBAY CONFIGURATION |
| 4 | DIMENSION LAYOUTS |
| 5 | DIMENSION DETAILS |
| 6 | RECOMMENDED SINGLE PCB LAYOUT |


# 2 BAY STAC64 RIGHT ANGLE HEADER ASSEMBLY
# (P/N: 34708-2012 SHOWN)

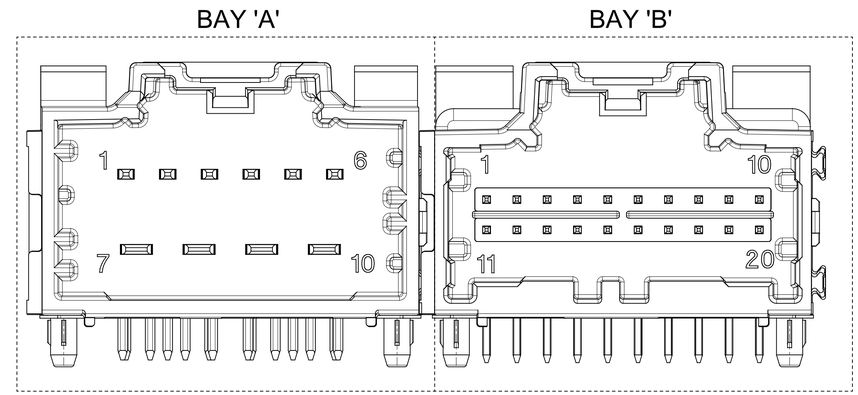


Y3 NOTES: VALID UNLESS OTHERWISE SPECIFIED

1. GENERAL:

a. CONNECTOR HEADER MUST BE VALIDATED TO THE FOLLOWING FUNCTIONAL REQUIREMENTS:
PRODUCT SPECIFICATION:
8-20 CKT 0.64 PRODUCT SPEC: PS-34729-020/PS-31408-100
10/14 CKT HYBRID PRODUCT SPEC: PS-31372-100
b. APPLICATION REQUIREMENTS (REFERENCE ONLY):
APPLICATION SPECIFICATION: AS-34729-020/AS-31408-100
c. PACKAGING SPECIFICATION PER MOLEX DRAWING PK-31300-892 (TRAY)
d. PACKAGING SPECIFICATION PER MOLEX DRAWING PK-31301-063 (TUBE)
e. PACKAGING SPECIFICATION PER MOLEX DRAWING PK-31300-894 (ALT TRAY)

2. MATERIALS:

a. SHROUD (PLASTIC HOUSING):
RESIN - SPS
COLOR:
POL A - BLACK
POL B - GRAY
POL C - BROWN
POL D - GREEN
b. 0.64mm PINS:
BASE MATERIAL: COPPER ALLOY
PLATING TYPE: AS NOTED
1.5/2.8mm BLADES:
BASE MATERIAL: COPPER ALLOY
PLATING TYPE: AS NOTED
Y9 c. PIN ALIGNMENT PLATE:
8CKT, 12CKT, 16CKT AND 20CKT: MYLAR
HYBRID 10CKT: MYLAR
HYBRID 14CKT: MYLAR

3. PLATING REQUIREMENTS:

a. UNDERPLATING - OVERALL NICKEL
b. OVERPLATING - OVERALL TIN

4. FOR ADDITIONAL INFORMATION AND DIMENSIONS OF INDIVIDUAL BAYS
REFER TO THE FOLLOWING SINGLE BAY DRAWINGS:
8-20 CKT 0.64: SD-34691-100
10 CKT HYBRID: SD-34696-100
14 CKT HYBRID: SD-34773-010

5. G DENOTES DIMENSIONS THAT MAY BE QUALIFIED WITH A GAUGE.

| REV. | REV. DESCRIPTION | EC# | DATE |
|---|---|---|---|
| Y9 | 1. UPDATED NOTES<br>2. ADDED NEW P/N 34708-2059 IN SHEET 3<br>3. ADDED SOLDERING METHODS | CO-000007814 | 2023.11 |
| Y8 | ADDED NEW P/N: 34708-2058 FOR TRAY PKG IN SHEET 3 | CO-000003126 | 2023.05 |
| Y7 | ADDED NEW P/NS: 34708-7001 FOR TUBE PKG IN SHEET 2 AND 34708-2056 & 34708-2057 FOR TRAY PKG IN THE SHEET 3 | CO-000003036 | 2023.04 |
| Y6 | ADDED P/NS 34708-2053, 34708-2054 AND 34708-2055 IN SHEET 3 | CO-000000440 | 2022.01 |
| Y5 | ADDED P/NS 34708-2051 AND 34708-2052 IN SHEET 3 | 679095 | 2021.09 |
| Y4 | ADDED P/N 34708-2049 IN SHEET 3 | 670800 | 2021.07 |
| Y3 | 1. UPDATED NOTES<br>2. ADDED NEW P/NS 34708-2048 AND 34708-7048 IN SHEET 3 | 662724 | 2021.05 |

INSPECTION BALLOON NUMBER LOG

PER DRAWING REVISION: Y9

LAST BALLOON NUMBER USED: 55

ADDED BALLOON NUMBERS:

REMOVED BALLOON NUMBERS:

FUNCTIONAL SYMBOLS
FA = 0
FC = 0
FP = 0
DIVISIONAL SYMBOLS

THIS DRAWING CONTAINS INFORMATION THAT IS PROPRIETARY TO MOLEX ELECTRONIC TECHNOLOGIES, LLC AND SHOULD NOT BE USED WITHOUT WRITTEN PERMISSION

| DIMENSION UNITS | SCALE |
|---|---|
| MM | 4:1 |

GENERAL TOLERANCES (UNLESS SPECIFIED)

| | |
|---|---|
| ANGULAR TOL | ± 1° |
| 4 PLACES | ± |
| 3 PLACES | ± |
| 2 PLACES | ± 0.130 |
| 1 PLACE | ± 0.25 |
| 0 PLACES | ± |

DRAFT WHERE APPLICABLE MUST REMAIN WITHIN DIMENSIONS

CURRENT REV DESC: SEE REVISION TABLE

STATUS: Production
DRWN: Praveen Kumar S 2023-08-28
CHK'D: Sien Li 2023-12-06
APPR: Elvis Song 2023-12-07

THIRD ANGLE PROJECTION | DRAWING: D-SIZE | SERIES: 34708

molex

2-BAY STAC64 RIGHT ANGLE
HEADER ASSEMBLY SALES DRAWING

PRODUCT SALES DRAWING

| DOCUMENT NUMBER | DOC TYPE | DOC PART | REVISION |
|---|---|---|---|
| SD-34708-200 | PSD | 001 | Y9 |

MATERIAL NUMBER | CUSTOMER: GENERAL MARKET | SHEET NUMBER: 1 OF 6

FORMAT TC-Expand2
REVISION: B
DATE: 2022/08/01

TABLE OF CONTENTS

2 DIMENSIONAL CHART FOR MULTIBAY CONFIGURATION

# DIMENSIONAL CHART FOR MULTIBAY CONFIGURATION:

Y9

| 2 BAY PART NUMBER (ALT TRAY) | 2 BAY PART NUMBER (TUBE PKG) | 2 BAY PART NUMBER (TRAY PKG) | BAY A | | | BAY B | | | DIM'A' | DIM 'B' | DIM 'C' | DIM 'D' | SOLDERING METHOD |
|---|---|---|---|---|---|---|---|---|---|---|---|---|---|
| | | | CKT | TYPE | POL | CKT | TYPE | POL | | | | | |
| TBD | 34708-7000 | 34708-2000 | 20 | 0.64mm | A | 20 | 0.64mm | B | 66.94 | 64.47 | 27.94 | 27.94 | WAVE SOLDERING |
| TBD | 34708-7001 | 34708-2001 | 20 | 0.64mm | B | 20 | 0.64mm | C | 66.94 | 64.47 | 27.94 | 27.94 | WAVE SOLDERING |
| TBD | TBD | 34708-2002 | 20 | 0.64mm | C | 20 | 0.64mm | D | 66.94 | 64.47 | 27.94 | 27.94 | WAVE SOLDERING |
| TBD | 34708-7003 | 34708-2003 | 20 | 0.64mm | C | 8 | 0.64mm | A | 51.70 | 49.23 | 27.94 | 12.70 | WAVE SOLDERING |
| TBD | 34708-7004 | 34708-2004 | 20 | 0.64mm | C | 12 | 0.64mm | A | 56.78 | 54.31 | 27.94 | 17.78 | WAVE SOLDERING |
| TBD | TBD | 34708-2005 | 14 | HYBRID | C | 20 | 0.64mm | C | 66.94 | 64.47 | 27.94 | 27.94 | WAVE SOLDERING |
| TBD | TBD | 34708-2006 | 16 | 0.64mm | B | 20 | 0.64mm | B | 61.86 | 59.39 | 22.86 | 27.94 | WAVE SOLDERING |
| TBD | TBD | 34708-2007 | 16 | 0.64mm | C | 20 | 0.64mm | C | 61.86 | 59.39 | 22.86 | 27.94 | WAVE SOLDERING |
| TBD | TBD | 34708-2008 | 20 | 0.64mm | A | 20 | 0.64mm | C | 66.94 | 64.47 | 27.94 | 27.94 | WAVE SOLDERING |
| TBD | TBD | 34708-2009 | 8 | 0.64mm | A | 8 | 0.64mm | B | 36.46 | 33.99 | 12.70 | 12.70 | WAVE SOLDERING |
| TBD | TBD | 34708-2010 | 12 | 0.64mm | A | 10 | HYBRID | B | 56.78 | 54.31 | 17.78 | 27.94 | WAVE SOLDERING |
| TBD | TBD | 34708-2011 | 20 | 0.64mm | C | 20 | 0.64mm | B | 66.94 | 64.47 | 27.94 | 27.94 | WAVE SOLDERING |
| TBD | TBD | 34708-2012 | 10 | HYBRID | A | 20 | 0.64mm | C | 66.94 | 64.47 | 27.94 | 27.94 | WAVE SOLDERING |
| TBD | TBD | 34708-2013 | 12 | 0.64mm | A | 20 | 0.64mm | B | 56.78 | 54.31 | 17.78 | 27.94 | WAVE SOLDERING |
| TBD | TBD | 34708-2014 | 14 | HYBRID | C | 20 | 0.64mm | B | 66.94 | 64.47 | 27.94 | 27.94 | WAVE SOLDERING |
| TBD | TBD | 34708-2015 | 20 | 0.64mm | B | 14 | HYBRID | C | 66.94 | 64.47 | 27.94 | 27.94 | WAVE SOLDERING |
| TBD | TBD | 34708-2016 | 12 | 0.64mm | B | 20 | 0.64mm | D | 56.78 | 54.31 | 17.78 | 27.94 | WAVE SOLDERING |
| TBD | TBD | 34708-2017 | 16 | 0.64mm | A | 8 | 0.64mm | C | 46.62 | 44.15 | 22.86 | 12.70 | WAVE SOLDERING |
| TBD | TBD | 34708-2018 | 12 | 0.64mm | A | 16 | 0.64mm | A | 51.70 | 47.23 | 22.86 | 17.78 | WAVE SOLDERING |
| TBD | TBD | 34708-2019 | 20 | 0.64mm | A | 12 | 0.64mm | A | 56.78 | 54.31 | 27.94 | 17.78 | WAVE SOLDERING |
| TBD | 34708-7012 | 34708-2020 | 10 | HYBRID | A | 16 | 0.64mm | A | 61.86 | 59.39 | 27.94 | 22.86 | WAVE SOLDERING |
| TBD | TBD | 34708-2021 | 16 | 0.64mm | B | 16 | 0.64mm | A | 56.78 | 54.31 | 22.86 | 22.86 | WAVE SOLDERING |
| TBD | TBD | 34708-2022 | 20 | 0.64mm | C | 10 | HYBRID | A | 66.94 | 64.47 | 27.94 | 27.94 | WAVE SOLDERING |
| TBD | TBD | 34708-2023 | 20 | 0.64mm | A | 20 | 0.64mm | C | 66.94 | 64.47 | 27.94 | 27.94 | WAVE SOLDERING |
| TBD | TBD | 34708-2024 | 8 | 0.64mm | A | 10 | HYBRID | A | 51.70 | 47.23 | 12.70 | 27.94 | WAVE SOLDERING |
| TBD | TBD | 34708-2025 | 8 | 0.64mm | B | 10 | HYBRID | A | 51.70 | 47.23 | 12.70 | 27.94 | WAVE SOLDERING |
| TBD | TBD | 34708-2026 | 16 | 0.64mm | A | 20 | 0.64mm | A | 61.86 | 59.39 | 22.86 | 27.94 | WAVE SOLDERING |
| TBD | TBD | 34708-2027 | 8 | 0.64mm | B | 8 | 0.64mm | B | 36.46 | 33.99 | 12.70 | 12.70 | WAVE SOLDERING |
| TBD | TBD | 34708-2028 | 16 | 0.64mm | A | 8 | 0.64mm | A | 46.62 | 44.15 | 22.86 | 12.70 | WAVE SOLDERING |
| TBD | TBD | 34708-2029 | 12 | 0.64mm | A | 12 | 0.64mm | B | 46.62 | 44.15 | 17.78 | 17.78 | WAVE SOLDERING |
| TBD | 34708-7030 | 34708-2030 | 10 | HYBRID | B | 10 | HYBRID | A | 66.94 | 64.47 | 27.94 | 27.94 | WAVE SOLDERING |
| TBD | TBD | 34708-2031 | 12 | 0.64mm | B | 12 | 0.64mm | A | 46.62 | 44.15 | 17.78 | 17.78 | WAVE SOLDERING |
| TBD | TBD | 34708-2032 | 20 | 0.64mm | D | 16 | 0.64mm | B | 61.68 | 59.39 | 27.94 | 22.86 | WAVE SOLDERING |
| TBD | TBD | 34708-2033 | 20 | 0.64mm | D | 16 | 0.64mm | C | 61.86 | 59.39 | 27.94 | 22.86 | WAVE SOLDERING |
| TBD | TBD | 34708-2034 | 16 | 0.64mm | B | 20 | 0.64mm | D | 61.68 | 59.39 | 22.86 | 27.94 | WAVE SOLDERING |
| TBD | TBD | 34708-2035 | 16 | 0.64mm | C | 20 | 0.64mm | D | 61.86 | 59.39 | 22.86 | 27.94 | WAVE SOLDERING |
| TBD | TBD | 34708-2036 | 8 | 0.64mm | C | 16 | 0.64mm | C | 46.62 | 44.15 | 12.70 | 22.86 | WAVE SOLDERING |
| 34708-7537 | TBD | 34708-2037 | 16 | 0.64mm | A | 10 | HYBRID | B | 61.86 | 59.39 | 22.86 | 27.94 | WAVE SOLDERING |
| 34708-7538 | TBD | 34708-2038 | 10 | HYBRID | A | 16 | 0.64mm | C | 61.86 | 59.39 | 27.94 | 22.86 | WAVE SOLDERING |
| TBD | TBD | 34708-2039 | 14 | HYBRID | A | 20 | 0.64mm | D | 66.94 | 64.47 | 27.94 | 27.94 | WAVE SOLDERING |
| TBD | TBD | 34708-2040 | 20 | 0.64mm | A | 8 | 0.64mm | A | 51.70 | 49.23 | 27.94 | 12.70 | WAVE SOLDERING |
| TBD | TBD | 34708-2041 | 12 | 0.64mm | B | 16 | 0.64mm | A | 51.70 | 49.23 | 17.78 | 22.86 | WAVE SOLDERING |
| TBD | TBD | 34708-2042 | 16 | 0.64mm | A | 16 | 0.64mm | A | 56.78 | 54.31 | 22.86 | 22.86 | WAVE SOLDERING |
| TBD | TBD | 34708-2043 | 20 | 0.64mm | B | 20 | 0.64mm | A | 66.94 | 64.47 | 27.94 | 27.94 | WAVE SOLDERING |
| TBD | TBD | 34708-2044 | 10 | HYBRID | A | 10 | HYBRID | B | 66.94 | 64.47 | 27.94 | 27.94 | WAVE SOLDERING |
| TBD | TBD | 34708-2045 | 20 | 0.64mm | A | 14 | HYBRID | B | 66.94 | 64.47 | 27.94 | 27.94 | WAVE SOLDERING |
| TBD | TBD | 34708-2046 | 20 | 0.64mm | C | 14 | HYBRID | A | 66.94 | 64.47 | 27.94 | 27.94 | WAVE SOLDERING |

Y7

THIS DRAWING CONTAINS INFORMATION THAT IS PROPRIETARY TO MOLEX ELECTRONIC TECHNOLOGIES, LLC AND SHOULD NOT BE USED WITHOUT WRITTEN PERMISSION

FUNCTIONAL SYMBOLS: FA = 0, FC = 0, FP = 0

DIVISIONAL SYMBOLS

DIMENSION UNITS: MM

SCALE: 4:1

GENERAL TOLERANCES (UNLESS SPECIFIED)

| | |
|---|---|
| ANGULAR TOL | ± 1° |
| 4 PLACES | ± |
| 3 PLACES | ± |
| 2 PLACES | ± 0.130 |
| 1 PLACE | ± 0.25 |
| 0 PLACES | ± |

DRAFT WHERE APPLICABLE MUST REMAIN WITHIN DIMENSIONS

CURRENT REV DESC: SEE REVISION TABLE

STATUS: Production

| | | |
|---|---|---|
| DRWN: | Praveen Kumar S | 2023-08-28 |
| CHK'D: | Sien Li | 2023-12-06 |
| APPR: | Elvis Song | 2023-12-07 |

THIRD ANGLE PROJECTION

DRAWING: D-SIZE

SERIES: 34708

molex

2-BAY STAC64 RIGHT ANGLE HEADER ASSEMBLY SALES DRAWING

PRODUCT SALES DRAWING

| DOCUMENT NUMBER | DOC TYPE | DOC PART | REVISION |
|---|---|---|---|
| SD-34708-200 | PSD | 001 | Y9 |

MATERIAL NUMBER

CUSTOMER: GENERAL MARKET

SHEET NUMBER: 2 OF 6

TABLE OF CONTENTS

3 DIMENSIONAL CHART FOR MULTIBAY CONFIGURATION

# DIMENSIONAL CHART FOR MULTIBAY CONFIGURATION:

Y9

| | 2 BAY PART NUMBER (ALT TRAY) | 2 BAY PART NUMBER (TUBE PKG) | 2 BAY PART NUMBER (TRAY PKG) | BAY A | | | BAY B | | | DIM'A' | DIM 'B' | DIM 'C' | DIM 'D' | SOLDERING METHOD |
|---|---|---|---|---|---|---|---|---|---|---|---|---|---|---|
| | | | | CKT | TYPE | POL | CKT | TYPE | POL | | | | | |
| | TBD | TBD | 34708-2050 | 20 | 0.64mm | A | 16 | 0.64mm | A | 61.86 | 59.39 | 27.94 | 22.86 | WAVE SOLDERING |
| | TBD | TBD | 34708-2060 | 10 | HYBRID | B | 16 | 0.64mm | A | 61.86 | 59.39 | 27.94 | 22.86 | WAVE SOLDERING |
| | TBD | TBD | 34708-2070 | 16 | 0.64mm | A | 12 | 0.64mm | A | 51.70 | 49.23 | 22.86 | 17.78 | WAVE SOLDERING |
| | TBD | TBD | 34708-2080 | 16 | 0.64mm | A | 16 | 0.64mm | B | 56.78 | 54.31 | 22.86 | 22.86 | WAVE SOLDERING |
| | TBD | TBD | 34708-2090 | 16 | 0.64mm | B | 16 | 0.64mm | C | 56.78 | 54.31 | 22.86 | 22.86 | WAVE SOLDERING |
| | TBD | TBD | 34708-2047 | 8 | 0.64mm | A | 20 | 0.64mm | A | 51.70 | 49.23 | 12.70 | 27.94 | WAVE SOLDERING |
| Y3 | TBD | 34708-7048 | 34708-2048 | 10 | HYBRID | A | 20 | 0.64mm | D | 66.94 | 64.47 | 27.94 | 27.94 | WAVE SOLDERING |
| Y4 | TBD | TBD | 34708-2049 | 14 | HYBRID | A | 14 | HYBRID | B | 66.94 | 64.47 | 27.94 | 27.94 | WAVE SOLDERING |
| Y5 | TBD | TBD | 34708-2051 | 14 | HYBRID | A | 12 | 0.64mm | A | 56.78 | 54.31 | 27.94 | 17.78 | WAVE SOLDERING |
| Y5 | TBD | TBD | 34708-2052 | 14 | HYBRID | C | 12 | 0.64mm | B | 56.78 | 54.31 | 27.94 | 17.78 | WAVE SOLDERING |
| Y6 | TBD | TBD | 34708-2053 | 14 | HYBRID | B | 14 | HYBRID | C | 66.94 | 67.47 | 27.94 | 27.94 | WAVE SOLDERING |
| Y6 | TBD | TBD | 34708-2054 | 14 | HYBRID | B | 14 | HYBRID | A | 66.94 | 64.47 | 27.94 | 27.94 | WAVE SOLDERING |
| Y6 | TBD | TBD | 34708-2055 | 14 | HYBRID | C | 14 | HYBRID | B | 66.94 | 64.47 | 27.94 | 27.94 | WAVE SOLDERING |
| Y7 | TBD | TBD | 34708-2056 | 14 | HYBRID | C | 10 | HYBRID | A | 66.94 | 64.47 | 27.94 | 27.94 | WAVE SOLDERING |
| Y7 | TBD | TBD | 34708-2057 | 20 | 0.64mm | D | 16 | 0.64mm | A | 61.86 | 59.39 | 27.94 | 22.86 | WAVE SOLDERING |
| Y8 | TBD | TBD | 34708-2058 | 10 | HYBRID | B | 20 | 0.64mm | B | 66.94 | 64.47 | 27.94 | 27.94 | WAVE SOLDERING |
| Y9 | TBD | TBD | 34708-2059 | 20 | 0.64mm | A | 14 | HYBRID | C | 66.94 | 64.47 | 27.94 | 27.94 | WAVE SOLDERING |

THIS DRAWING CONTAINS INFORMATION THAT IS PROPRIETARY TO MOLEX ELECTRONIC TECHNOLOGIES, LLC AND SHOULD NOT BE USED WITHOUT WRITTEN PERMISSION

FUNCTIONAL SYMBOLS: FA = 0, FC = 0, FP = 0

DIVISIONAL SYMBOLS

DIMENSION UNITS: MM

SCALE: 4:1

GENERAL TOLERANCES (UNLESS SPECIFIED)

| | |
|---|---|
| ANGULAR TOL | ± 1° |
| 4 PLACES | ± |
| 3 PLACES | ± |
| 2 PLACES | ± 0.130 |
| 1 PLACE | ± 0.25 |
| 0 PLACES | ± |

DRAFT WHERE APPLICABLE MUST REMAIN WITHIN DIMENSIONS

CURRENT REV DESC: SEE REVISION TABLE

STATUS: Production

DRWN: Praveen Kumar S 2023-08-28

CHK'D: Sien Li 2023-12-06

APPR: Elvis Song 2023-12-07

THIRD ANGLE PROJECTION

DRAWING: D-SIZE

SERIES: 34708

molex

2-BAY STAC64 RIGHT ANGLE HEADER ASSEMBLY SALES DRAWING

PRODUCT SALES DRAWING

| DOCUMENT NUMBER | DOC TYPE | DOC PART | REVISION |
|---|---|---|---|
| SD-34708-200 | PSD | 001 | Y9 |

MATERIAL NUMBER

CUSTOMER: GENERAL MARKET

SHEET NUMBER: 3 OF 6

FORMAT TYLEnet42 - PORRAIN_B
DATE: 2022/08/01

TABLE OF CONTENTS


| | |
|---|---|
| 4 | DIMENSION LAYOUTS |


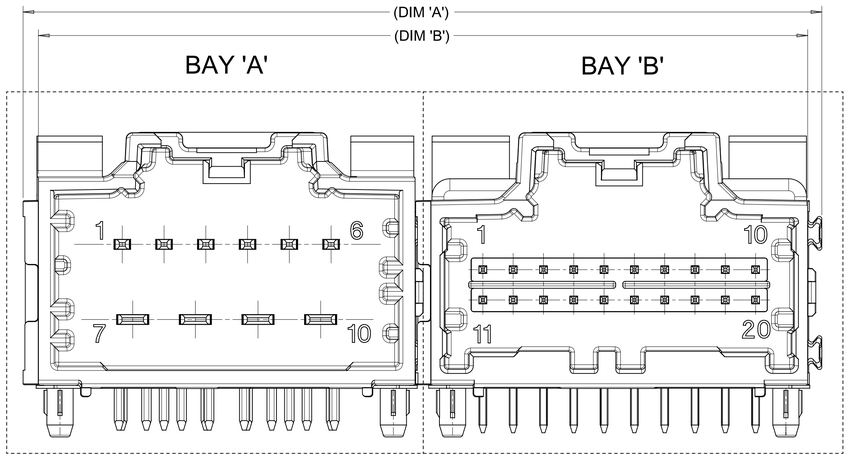


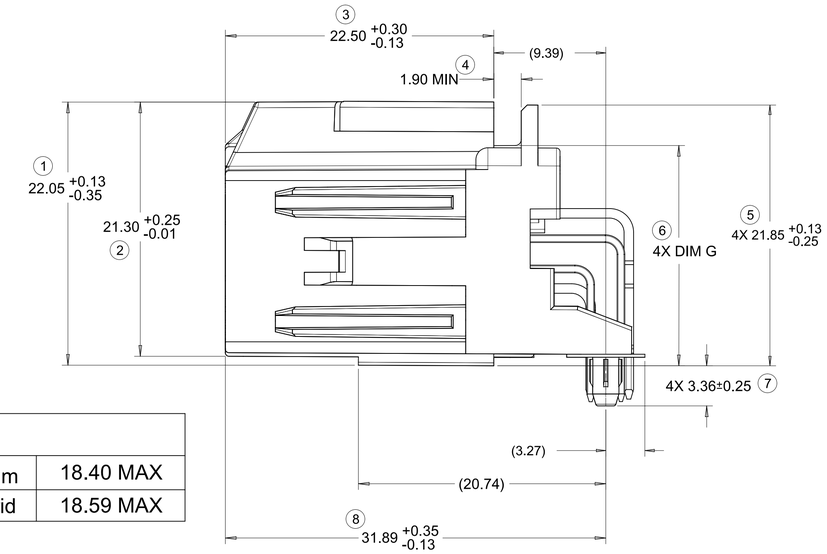


| FOR DIM G: | |
|---|---|
| 8-20CKT 0.64mm | 18.40 MAX |
| 10/14CKT Hybrid | 18.59 MAX |

## RECOMMENDED PCB LAYOUT

INSERT NECESSARY BAYS USING CHART ON SHEET 2 AND 3

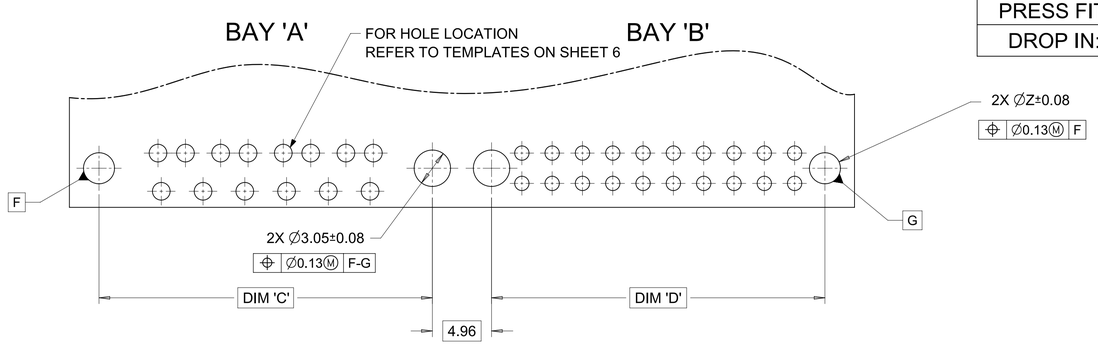


POST HOLE TABLE:

| FOR DIM Z: | |
|---|---|
| PRESS FIT: | 2.60 |
| DROP IN: | 3.05 |

ALL CIRCUIT OPTIONS

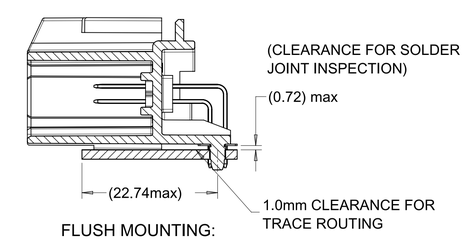


FLUSH MOUNTING:
HEADER-TO-PCB
SCALE 2:1

THIS DRAWING CONTAINS INFORMATION THAT IS PROPRIETARY TO MOLEX ELECTRONIC TECHNOLOGIES, LLC AND SHOULD NOT BE USED WITHOUT WRITTEN PERMISSION

FUNCTIONAL SYMBOLS: FA = 0, FC = 0, FE = 0

DIVISIONAL SYMBOLS

| DIMENSION UNITS | SCALE |
|---|---|
| MM | 4:1 |

GENERAL TOLERANCES (UNLESS SPECIFIED)

| | |
|---|---|
| ANGULAR TOL | ± 1° |
| 4 PLACES | ± |
| 3 PLACES | ± |
| 2 PLACES | ± 0.130 |
| 1 PLACE | ± 0.25 |
| 0 PLACES | ± |

DRAFT WHERE APPLICABLE MUST REMAIN WITHIN DIMENSIONS

CURRENT REV DESC: SEE REVISION TABLE

STATUS: Production
DRWN: Praveen Kumar S 2023-08-28
CHK'D: Sien Li 2023-12-06
APPR: Elvis Song 2023-12-07

THIRD ANGLE PROJECTION | DRAWING: D-SIZE | SERIES: 34708

molex

2-BAY STAC64 RIGHT ANGLE
HEADER ASSEMBLY SALES DRAWING

PRODUCT SALES DRAWING

| DOCUMENT NUMBER | DOC TYPE | DOC PART | REVISION |
|---|---|---|---|
| SD-34708-200 | PSD | 001 | Y9 |

MATERIAL NUMBER | CUSTOMER: GENERAL MARKET | SHEET NUMBER: 4 OF 6

FORMAT TC-Alpha-H2
REVISION: B
DATE: 2020-09-01

TABLE OF CONTENTS


5 DIMENSION DETAILS


## 14 CKT HYBRID HEADER DETAILS

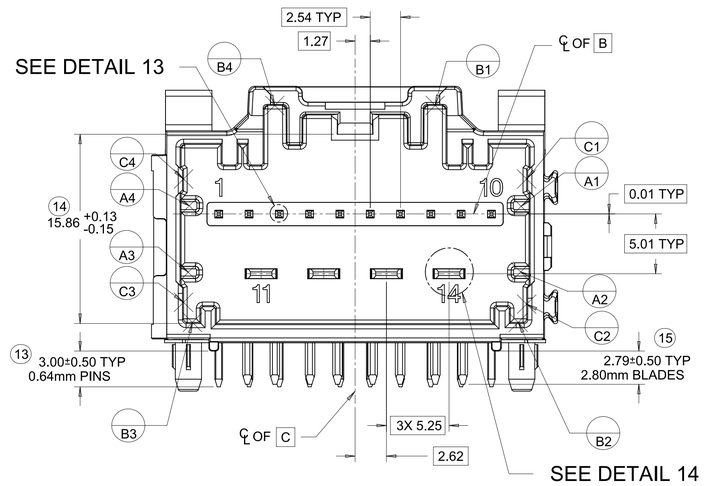


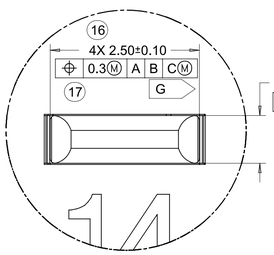


DETAIL 14
SCALE 20:1

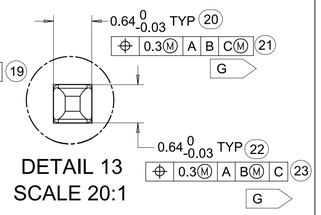


DETAIL 13
SCALE 20:1

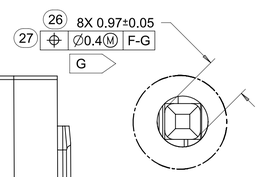


DETAIL 15
SCALE 15:1

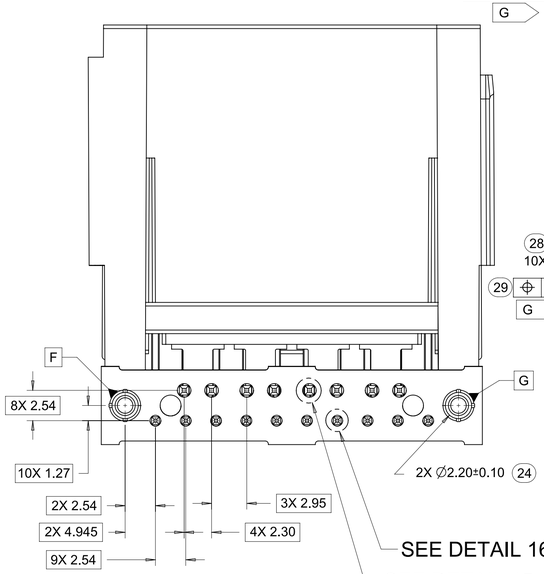


DETAIL 16
SCALE 15:1

## 8-20 CKT 0.64mm HEADER DETAILS

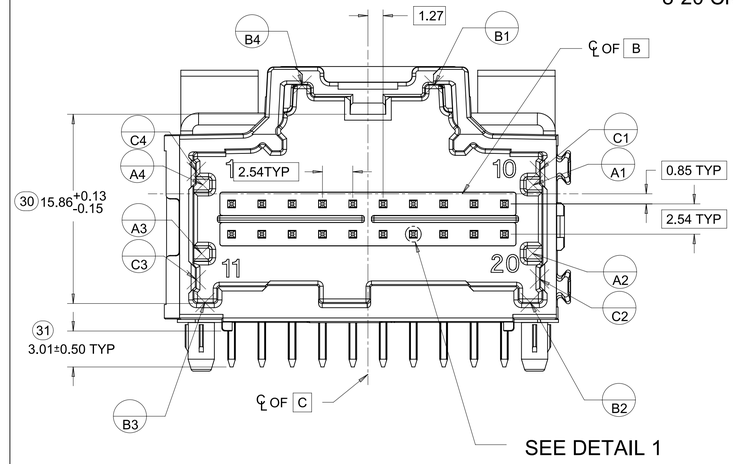


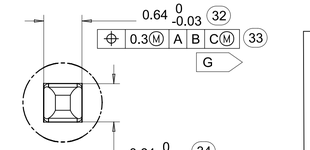


DETAIL 1
SCALE 20:1

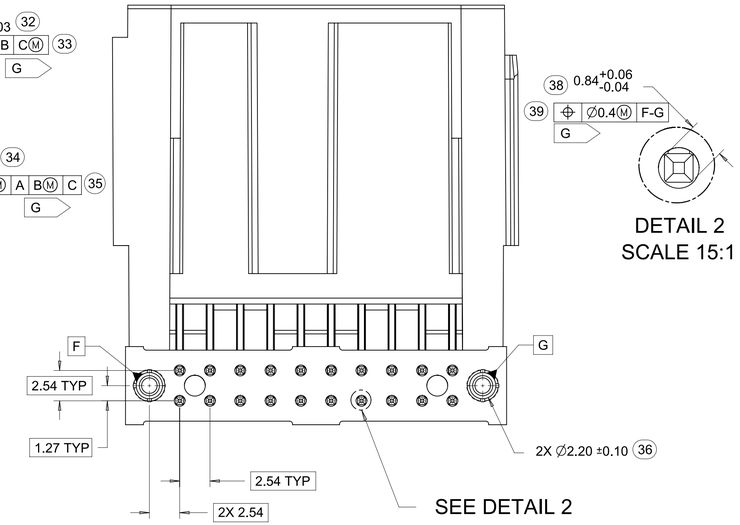


DETAIL 2
SCALE 15:1

## 10CKT STAC HYBRID HEADER DETAILS

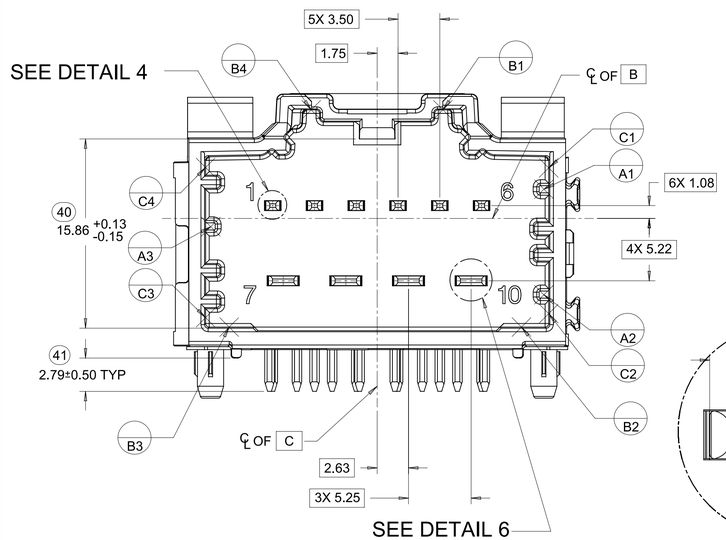


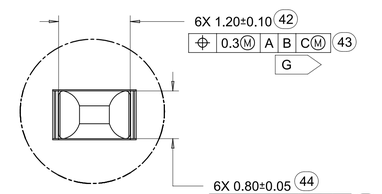


DETAIL 4
SCALE 20:1

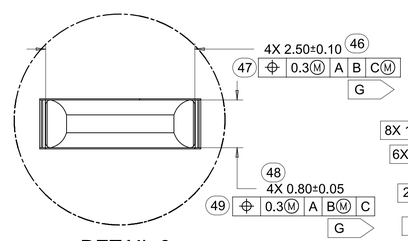


DETAIL 6
SCALE 20:1

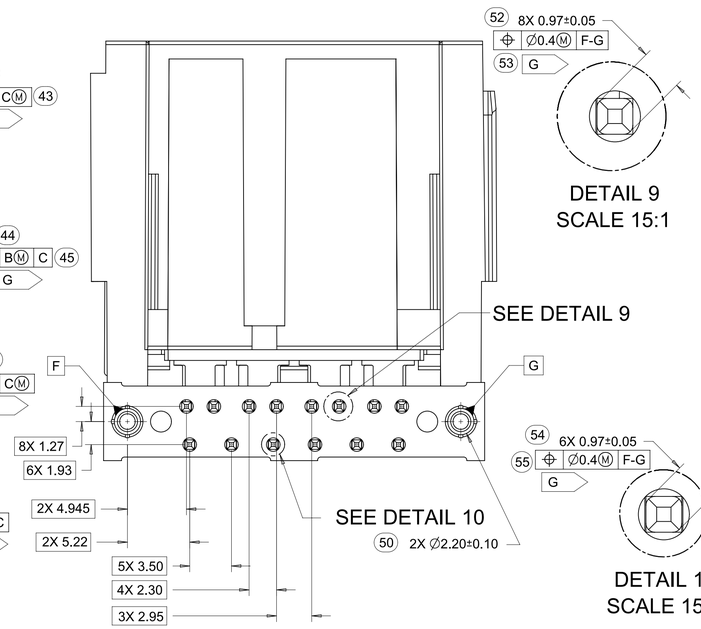


DETAIL 9
SCALE 15:1

DETAIL 10
SCALE 15:1

| | | | |
|---|---|---|---|
| FUNCTIONAL SYMBOLS | THIS DRAWING CONTAINS INFORMATION THAT IS PROPRIETARY TO MOLEX ELECTRONIC TECHNOLOGIES, LLC AND SHOULD NOT BE USED WITHOUT WRITTEN PERMISSION | | |
| FA = 0 | DIMENSION UNITS: MM | SCALE: 4:1 | CURRENT REV DESC: SEE REVISION TABLE |
| FC = 0 | GENERAL TOLERANCES (UNLESS SPECIFIED) | | |
| FE = 0 | ANGULAR TOL ± 1° | | |
| DIVISIONAL SYMBOLS | 4 PLACES ± | | |
| | 3 PLACES ± | | |
| | 2 PLACES ± 0.130 | | STATUS: Production |
| | 1 PLACE ± 0.25 | | DRWN: Praveen Kumar S 2023-08-28 |
| | 0 PLACES ± | | CHK'D: Sien Li 2023-12-06 |
| | DRAFT WHERE APPLICABLE MUST REMAIN WITHIN DIMENSIONS | | APPR: Elvis Song 2023-12-07 |
| | THIRD ANGLE PROJECTION | DRAWING: D-SIZE | SERIES: 34708 |

molex

2-BAY STAC64 RIGHT ANGLE
HEADER ASSEMBLY SALES DRAWING

PRODUCT SALES DRAWING

| DOCUMENT NUMBER | DOC TYPE | DOC PART | REVISION |
|---|---|---|---|
| SD-34708-200 | PSD | 001 | Y9 |

| MATERIAL NUMBER | CUSTOMER | SHEET NUMBER |
|---|---|---|
| | GENERAL MARKET | 5 OF 6 |

TABLE OF CONTENTS


| | |
|---|---|
| 6 | RECOMMENDED SINGLE PCB LAYOUT |


## 10 CKT HYBRID TEMPLATE PCB LAYOUT

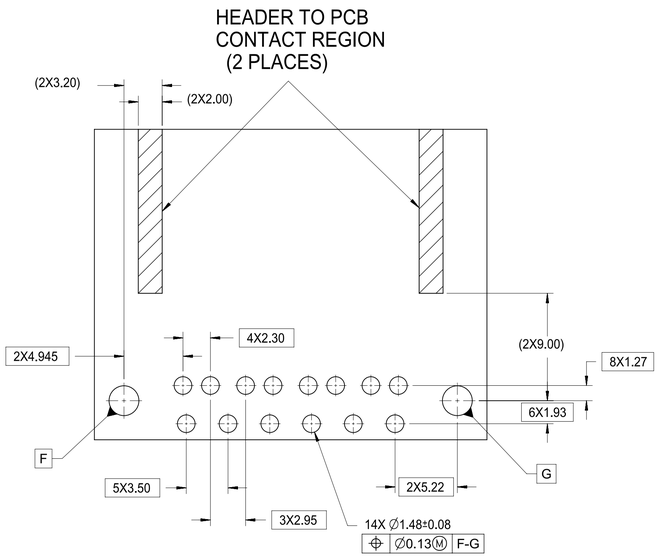


## 8-20CKT 0.64mm TEMPLATE PCB LAYOUT

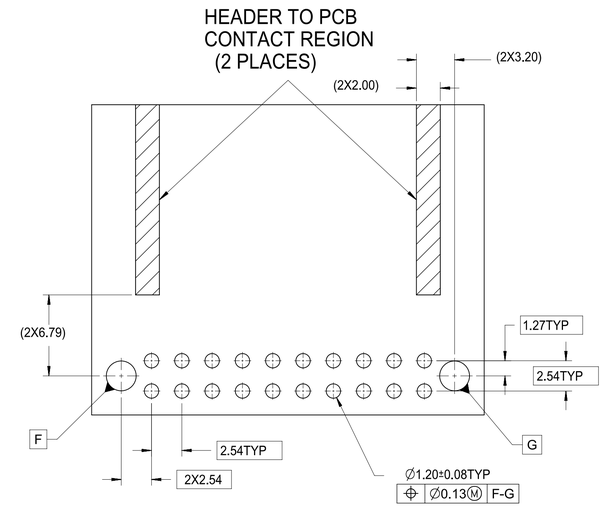


## 14 CKT HYBRID TEMPLATE PCB LAYOUT

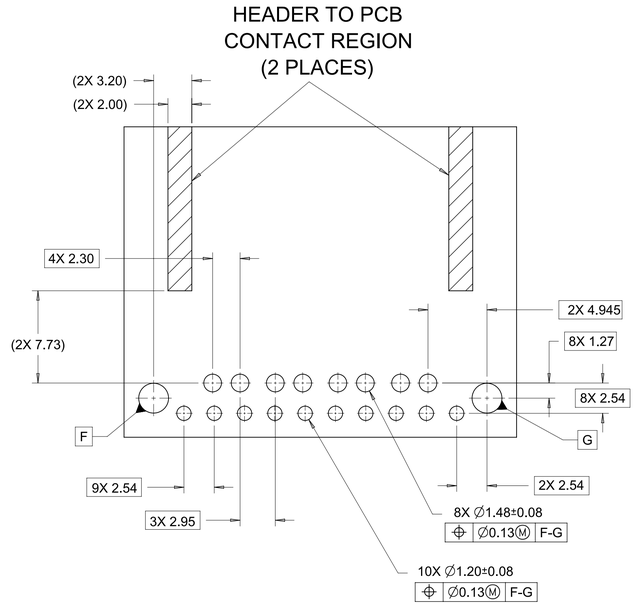


| | | | |
|---|---|---|---|
| FUNCTIONAL SYMBOLS | THIS DRAWING CONTAINS INFORMATION THAT IS PROPRIETARY TO MOLEX ELECTRONIC TECHNOLOGIES, LLC AND SHOULD NOT BE USED WITHOUT WRITTEN PERMISSION | | |
| FA = 0 | DIMENSION UNITS: MM | SCALE: 4:1 | CURRENT REV DESC: SEE REVISION TABLE |
| FC = 0 | GENERAL TOLERANCES (UNLESS SPECIFIED) | | |
| FP = 0 | ANGULAR TOL ± 1° | | |
| DIVISIONAL SYMBOLS | 4 PLACES ± | | |
| | 3 PLACES ± | | STATUS: Production |
| | 2 PLACES ± 0.130 | | DRWN: Praveen Kumar S 2023-08-28 |
| | 1 PLACE ± 0.25 | | CHK'D: Sien Li 2023-12-06 |
| | 0 PLACES ± | | APPR: Elvis Song 2023-12-07 |
| | DRAFT WHERE APPLICABLE MUST REMAIN WITHIN DIMENSIONS | THIRD ANGLE PROJECTION | DRAWING: D-SIZE / SERIES: 34708 |

molex

2-BAY STAC64 RIGHT ANGLE
HEADER ASSEMBLY SALES DRAWING

PRODUCT SALES DRAWING

| DOCUMENT NUMBER | DOC TYPE | DOC PART | REVISION |
|---|---|---|---|
| SD-34708-200 | PSD | 001 | Y9 |

MATERIAL NUMBER | CUSTOMER: GENERAL MARKET | SHEET NUMBER: 6 OF 6

FORMAT TLAYAHO
REVISION: B
DATE: 2020-06-01