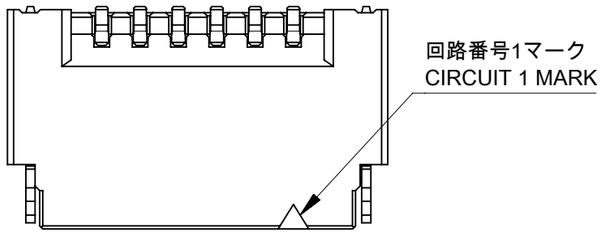

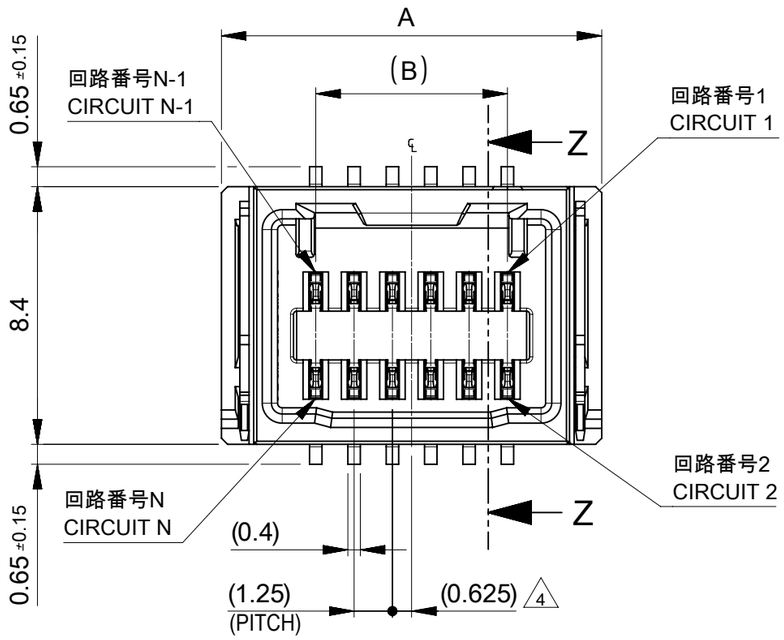

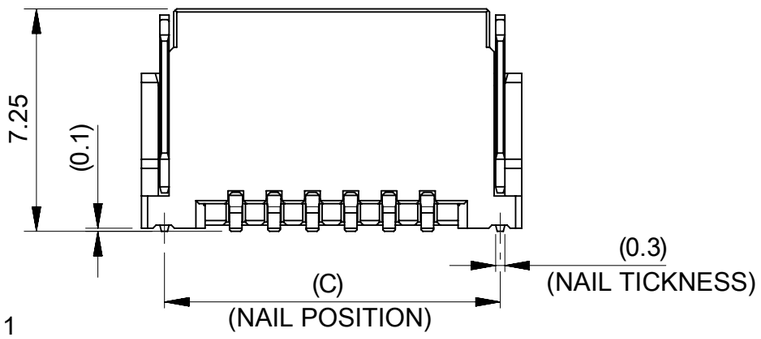

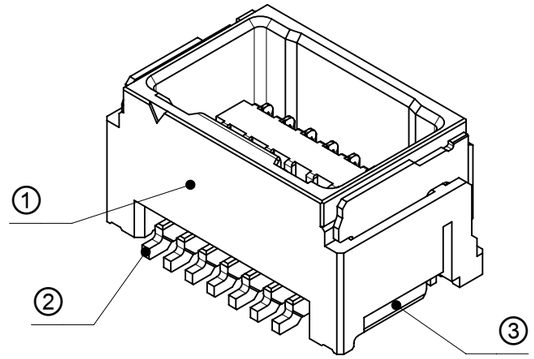

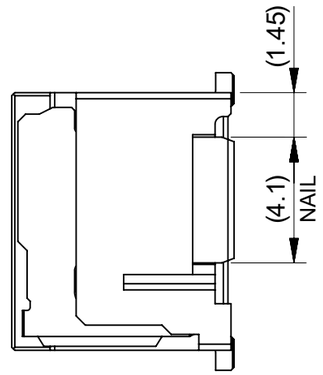

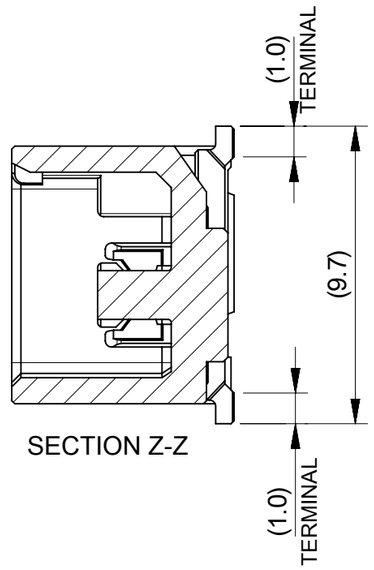

SECTION Z-Z

注記：
NOTES :

1. 材料及び仕上げ(めっき仕様)：TABLE 1, TABLE2 参照
MATERIAL AND FINISHES (PLATING SPECIFICATION) : SEE TABLE 1, TABLE2.

2. 製品仕様書、コネクタ取扱説明書、適合嵌合相手、適合リテーナーはSHEET 5をご参照下さい。
PLEASE REFER TO SHEET 5 FOR PRODUCT SPECIFICATION, APPLICATION SPECIFICATION, MATE WITH AND APPLICABLE RETAINER.

3. 端子テール部 及び ネイルの平坦度：0.12 MAXIMUM
TAIL AND NAIL COPLANARITY TO BE 0.12 MAXIMUM

4. 極数 / 2 = 偶数に適合
APPLY TO CIRCUIT SIZE / 2 = EVEN.

5. 発注番号：SHEET 5 参照
ORDER NUMBER : PLEASE REFER TO SHEET 5

207760****

極数 CIRCUIT SIZE

番号 NO.	カバーテープ COVER TAPE
7	無 WITHOUT
8	有 WITH

番号 NO.	ハウジングカラー HOUSING COLOR
0	ナチュラル (白) NATURAL(WHITE)
1	黒 BLACK
2	赤 RED
4	青 BLUE

C	B	A	極数 CIRCUIT SIZE
12.2	7.5	13.65	14
10.95	6.25	12.4	12
9.7	5	11.15	10
8.45	3.75	9.9	8
8.1	2.5	9.55	6
6.85	1.25	8.3	4

1 TABLE 1

番号 NO.	部品 PART	材質 MATERIAL	
①	ハウジング HOUSING	ポリアミド(PA) UL94V-0 色：SHEET 5参照 POLYAMIDE(PA) UL94V-0 COLOR : SEE SHEET 5	
②	ターミナル TERMINAL	黄銅 BRASS	
		接点部、テール部めっき CONTACT, TAIL PLATING	錫ビスマスめっき：1.0 MICROMETER MINIMUM TIN-BISMUTH PLATING
		下地めっき UNDER PLATING	ニッケルめっき：1.0 MICROMETER MINIMUM NICKEL PLATING (UNDER PLATING)
③	ネイル NAIL	黄銅 BRASS	
		テール部めっき TAIL PLATING	錫ビスマスめっき：1.0 MICROMETER MINIMUM TIN-BISMUTH PLATING
		下地めっき UNDER PLATING	ニッケルめっき：1.0 MICROMETER MINIMUM NICKEL PLATING (UNDER PLATING)

DOCUMENT STATUS	P1	RELEASE DATE	2026/02/10 10:00:19

THIS DRAWING CONTAINS INFORMATION THAT IS PROPRIETARY TO MOLEX ELECTRONIC TECHNOLOGIES, LLC AND SHOULD NOT BE USED WITHOUT WRITTEN PERMISSION

DIMENSION UNITS	SCALE
mm	NTS

GENERAL TOLERANCES (UNLESS SPECIFIED)

ANGULAR TOL	±	3.0 °
4 PLACES	±	0.2
3 PLACES	±	0.2
2 PLACES	±	0.2
1 PLACE	±	0.2
0 PLACES	±	0.2

DRAFT WHERE APPLICABLE MUST REMAIN WITHIN DIMENSIONS

CURRENT REV DESC: REMOVED OBSOLETED PART NUMBERS AS PER PCN#516659

EC NO:	844075	
DRWN:	SAMPRS	2025/12/31
CHK'D:	GGA	2026/02/10
APPR:	GGA	2026/02/10
INITIAL REVISION:		
DRWN:	TENAGASE	2019/05/31
APPR:	KOMURAKAMI	2020/01/16

THIRD ANGLE PROJECTION | DRAWING: A3-SIZE | SERIES: 207760

molex

MICRO-LOCK PLUS 1.25 W/B
DUAL ROW VERTICAL SMT PLUG ASSEMBLY
FOR POTTING

PRODUCT CUSTOMER DRAWING

DOCUMENT NUMBER	DOC TYPE	DOC PART	REVISION
2077600000-SD	PSD	000	C1

MATERIAL NUMBER	CUSTOMER	SHEET NUMBER
SEE SHEET 5	GENERAL	1 OF 5

製品形状
PRODUCT SHAPE

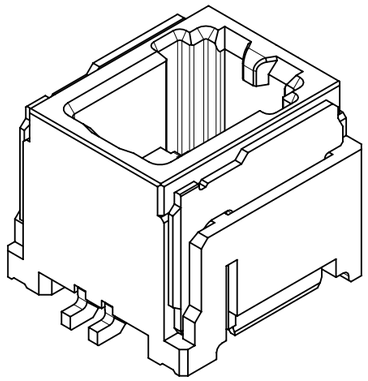

4-6極
4-6 CIRCUIT

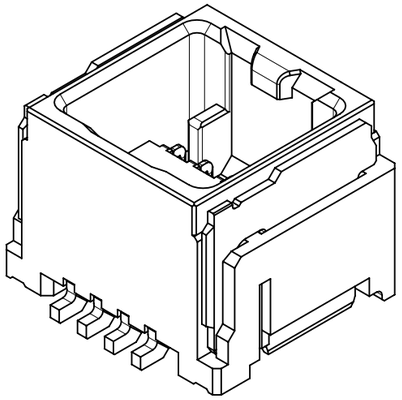

8-14極
8-14 CIRCUIT

カラー & キー位置 (4, 6極)
COLOR & KEY POSITION (4,6 CIRCUIT)

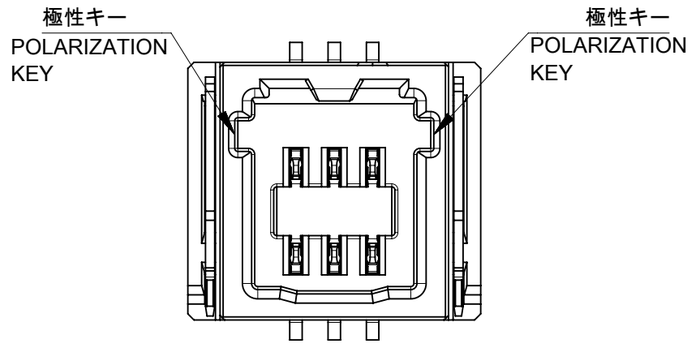

207760***0
ナチュラル(白)
NATURAL(WHITE)

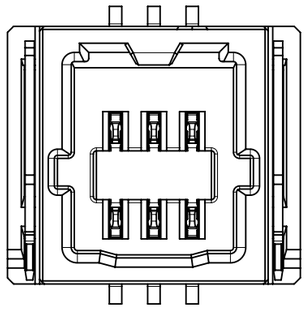

207760***1
黒
BLACK

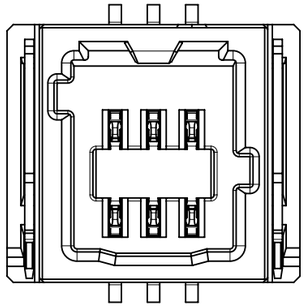

207760***2
赤
RED

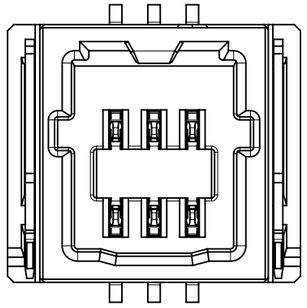

207760***4
青
BLUE

基板パターンレイアウト
PCB PATTERN LAYOUT

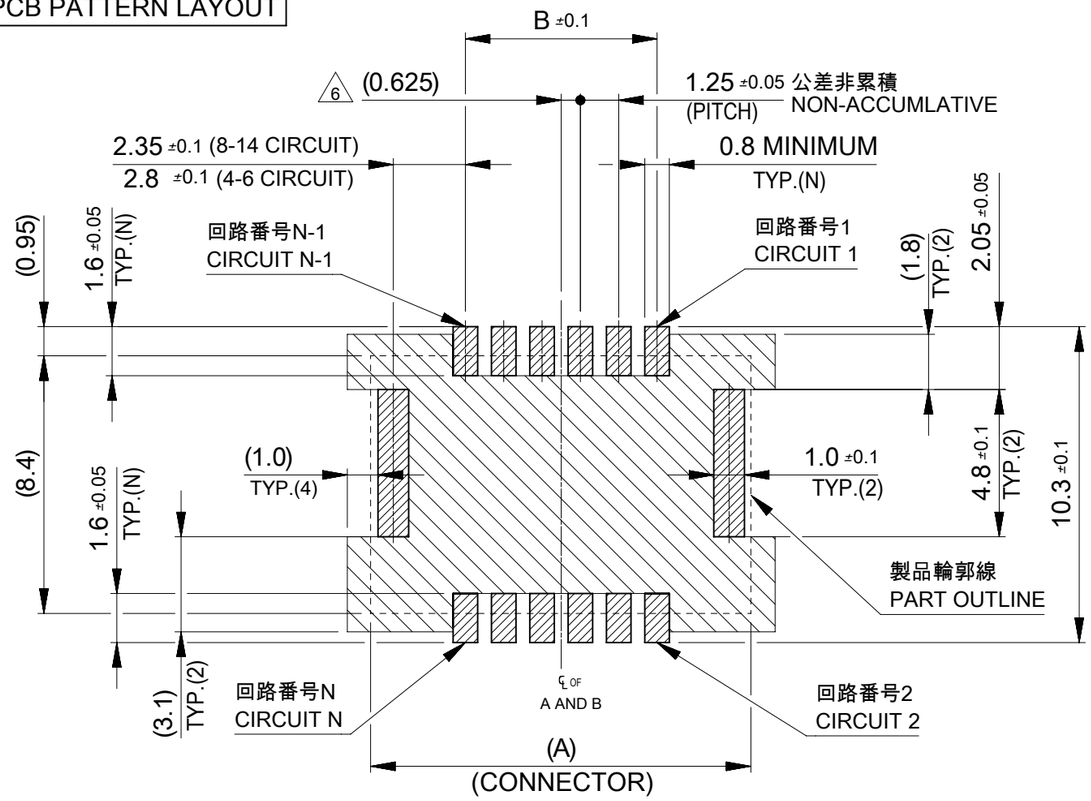

基板パターンレイアウト (参考)
(参考 : 基板厚 1.6mm, メタルマスク厚さ 0.15mm, マスク開口率 100%)
RECOMMEND PCB LAYOUT : COMPONENT SIDE
(REFERENCE : PCB THICKNESS 1.6mm, STENCIL THICKNESS 0.15mm, APERTURE RATIO 100%)

パターン禁止エリア
RESTRICTED AREA
NO PCB COMPONENTS ALLOWED

THIS DRAWING CONTAINS INFORMATION THAT IS PROPRIETARY TO MOLEX ELECTRONIC TECHNOLOGIES, LLC AND SHOULD NOT BE USED WITHOUT WRITTEN PERMISSION

DIMENSION UNITS	SCALE
mm	NTS

GENERAL TOLERANCES (UNLESS SPECIFIED)

ANGULAR TOL	±	3.0 °
4 PLACES	±	0.2
3 PLACES	±	0.2
2 PLACES	±	0.2
1 PLACE	±	0.2
0 PLACES	±	0.2

DRAFT WHERE APPLICABLE MUST REMAIN WITHIN DIMENSIONS

CURRENT REV DESC: REMOVED OBSOLETED PART NUMBERS AS PER PCN#516659

EC NO: 844075
DRWN: SAMPRS 2025/12/31
CHK'D: GGA 2026/02/10
APPR: GGA 2026/02/10

INITIAL REVISION:
DRWN: TENAGASE 2019/05/31
APPR: KOMURAKAMI 2020/01/16

THIRD ANGLE PROJECTION | DRAWING: A3-SIZE | SERIES: 207760

molex

MICRO-LOCK PLUS 1.25 W/B
DUAL ROW VERTICAL SMT PLUG ASSEMBLY
FOR POTTING

PRODUCT CUSTOMER DRAWING

DOCUMENT NUMBER	DOC TYPE	DOC PART	REVISION
2077600000-SD	PSD	000	C1

MATERIAL NUMBER	CUSTOMER	SHEET NUMBER
SEE SHEET 5	GENERAL	2 OF 5

DOCUMENT STATUS	P1	RELEASE DATE	2026/02/10 10:00:19

FORMAT: master-tb-prod-A3
REVISION: J1
DATE: 2021/05/01

吸着エリア
SUCTION AREA

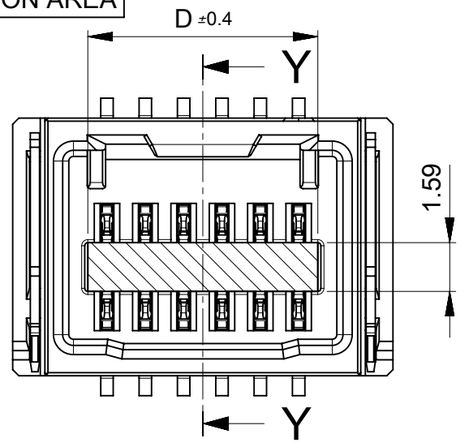

カバーテープ無
WITHOUT COVER TAPE
207760 **7*

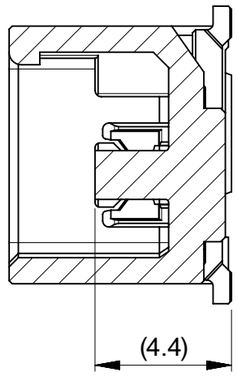

SECTION Y-Y

吸着高さ
SUCTION HEIGHT

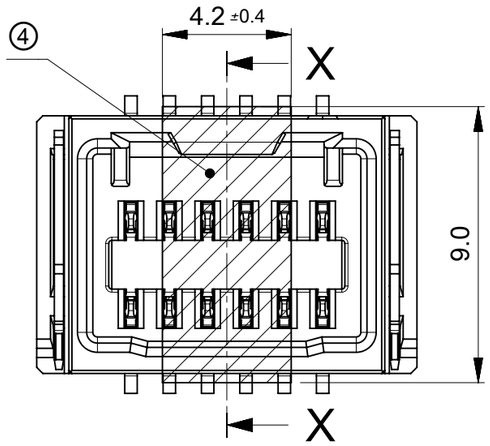

カバーテープ有
WITH COVER TAPE
207760 **8*

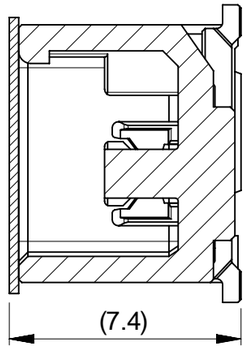

SECTION X-X

カバーテープ高さ
COVER TAPE HEIGHT

ポッティング高さ
POTTING HEIGHT

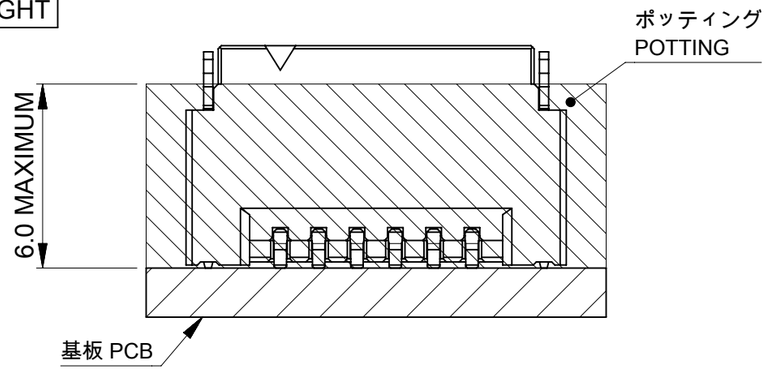

1 TABLE2

番号 NO.	部品 PART	材質 MATERIAL
④	カバーテープ COVER TAPE	ポリイミド POLYIMIDE

DOCUMENT STATUS	P1	RELEASE DATE	2026/02/10 10:00:19

嵌合状態図
MATED CONNECTORS

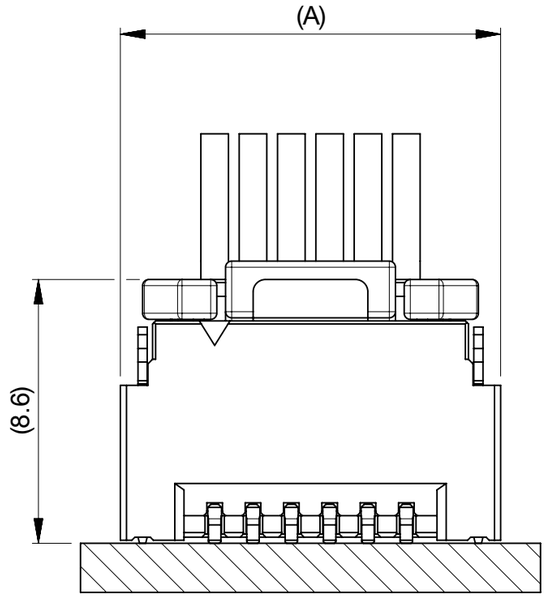

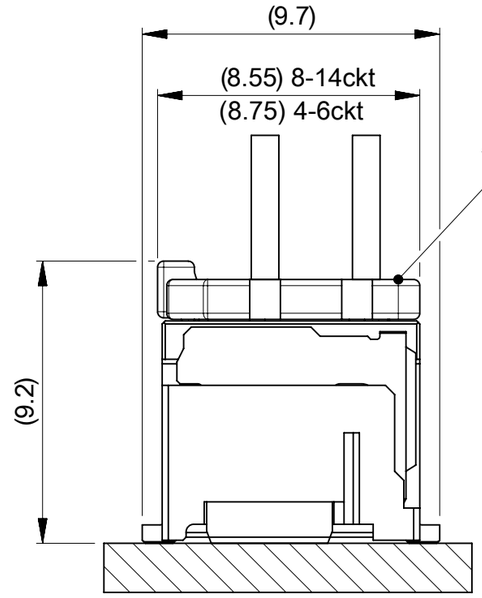

2 嵌合相手：204523シリーズ
MATE WITH : 204523 SERIES

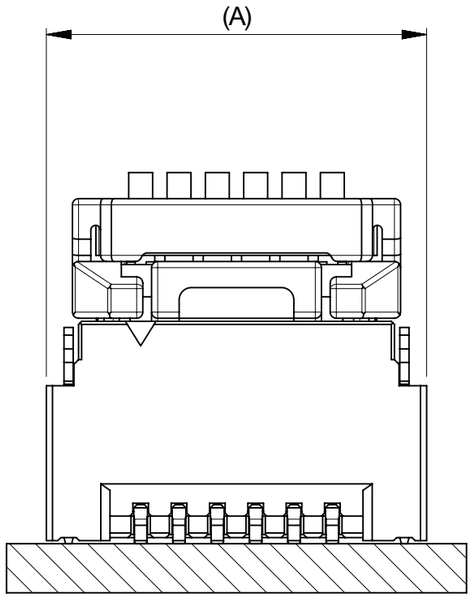

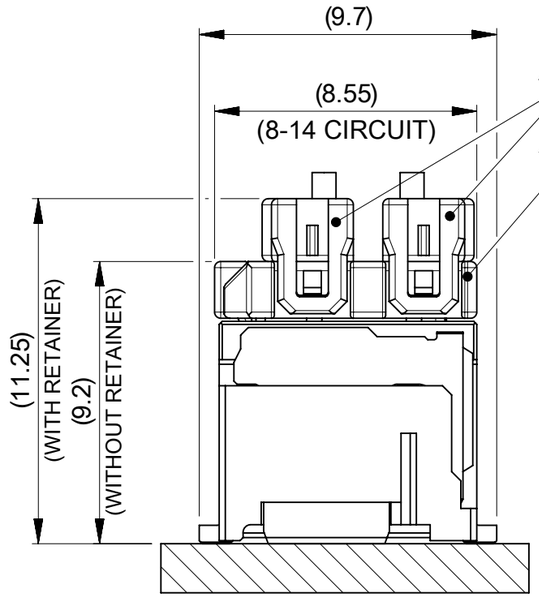

2 リテーナー：214528シリーズ
RETAINER : 214528 SERIES

2 嵌合相手：214527シリーズ
MATE WITH : 214527 SERIES

D	極数 CIRCUIT SIZE	カバーテープ COVER TAPE
8.75	14	無 WITHOUT
7.5	12	
6.25	10	
5	8	
3.75	6	
2.5	4	

THIS DRAWING CONTAINS INFORMATION THAT IS PROPRIETARY TO MOLEX ELECTRONIC TECHNOLOGIES, LLC AND SHOULD NOT BE USED WITHOUT WRITTEN PERMISSION

DIMENSION UNITS	SCALE
mm	NTS

GENERAL TOLERANCES (UNLESS SPECIFIED)

ANGULAR TOL	±	3.0 °
4 PLACES	±	0.2
3 PLACES	±	0.2
2 PLACES	±	0.2
1 PLACE	±	0.2
0 PLACES	±	0.2

DRAFT WHERE APPLICABLE MUST REMAIN WITHIN DIMENSIONS

CURRENT REV DESC: REMOVED OBSOLETED PART NUMBERS AS PER PCN#516659

EC NO: 844075
DRWN: SAMPRS 2025/12/31
CHK'D: GGA 2026/02/10
APPR: GGA 2026/02/10

INITIAL REVISION:
DRWN: TENAGASE 2019/05/31
APPR: KOMURAKAMI 2020/01/16

THIRD ANGLE PROJECTION | DRAWING: A3-SIZE | SERIES: 207760

molex

MICRO-LOCK PLUS 1.25 W/B
DUAL ROW VERTICAL SMT PLUG ASSEMBLY
FOR POTTING

PRODUCT CUSTOMER DRAWING

DOCUMENT NUMBER	DOC TYPE	DOC PART	REVISION
2077600000-SD	PSD	000	C1

MATERIAL NUMBER	CUSTOMER	SHEET NUMBER
SEE SHEET 5	GENERAL	3 OF 5

FORMAT: master-tb-prod-A3
REVISION: J1
DATE: 2021/05/01

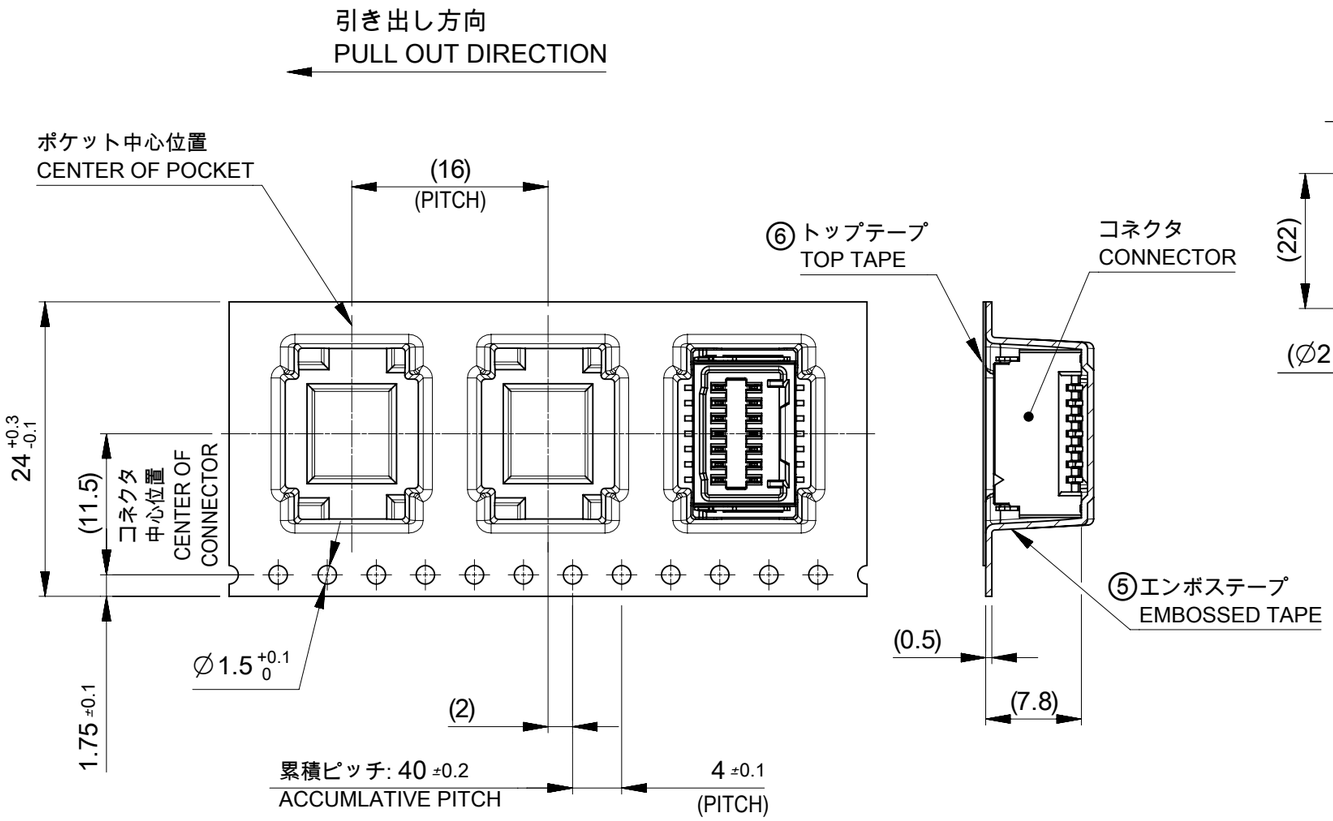

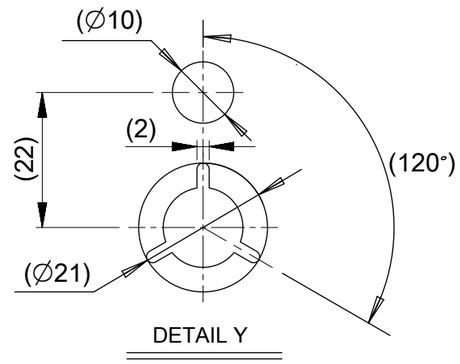

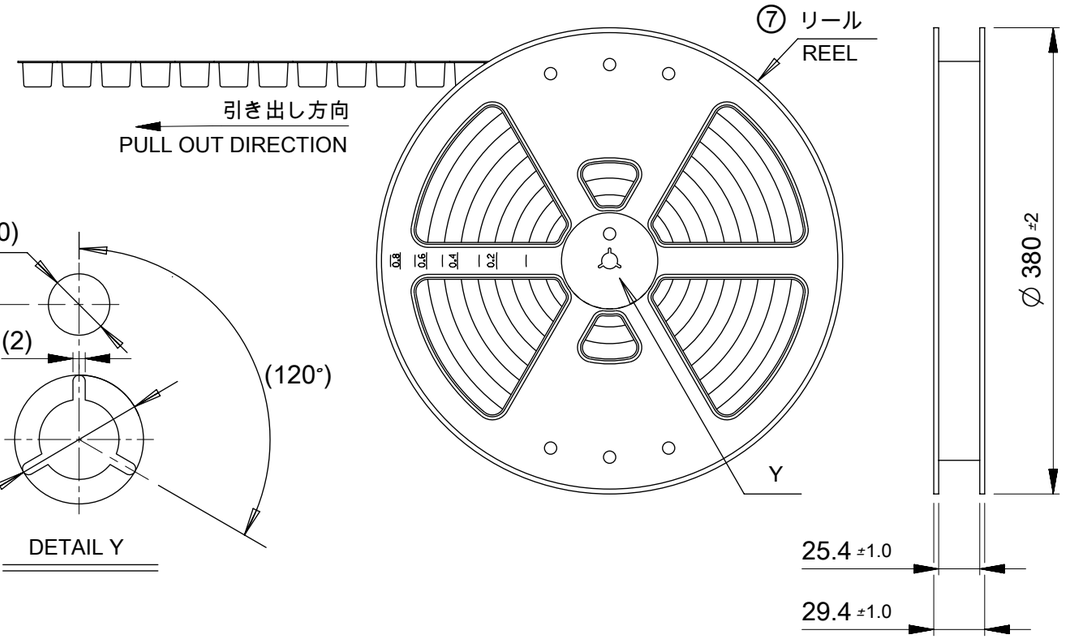

注記　NOTES

6. 梱包数量　:　500個/リール
   NUMBER OF CONNECTORS : 500 PIECES/REEL.
7. リードテープ長さ
   LEAD TAPE LENGTH

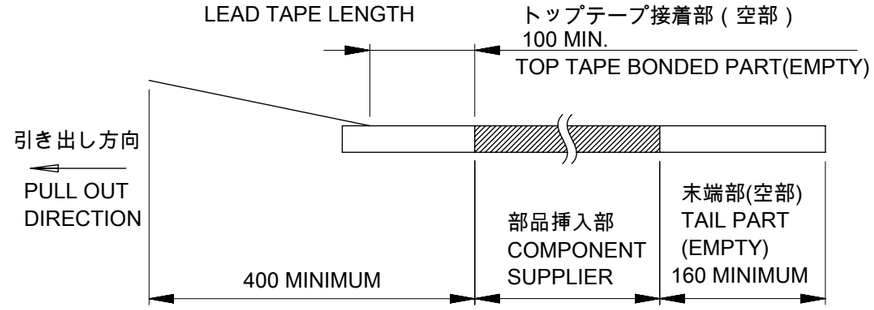

8. トップテープの剥離強度については、IEC60286-3に準拠
   TOP TAPE PEELING FORCE IS DEFINED BY IEC60286-3.

△1 TABLE3

番号 NO.	部品 PART	材質 MATERIAL
⑤	エンボステープ EMBOSSED TAPE	ポリスチレン(PS) POLYSTYRENE(PS)
⑥	トップテープ TOP TAPE	ポリエチレン(PE)、その他 POLYETHYLENE(PE), etc
⑦	リール REEL	ポリスチレン(PS) < リサイクル材を含む > POLYSTYRENE(PS) < RECYCLE MATERIAL CONTAINED >

DOCUMENT STATUS	P1	RELEASE DATE	2026/02/10 10:00:19

THIS DRAWING CONTAINS INFORMATION THAT IS PROPRIETARY TO MOLEX ELECTRONIC TECHNOLOGIES, LLC AND SHOULD NOT BE USED WITHOUT WRITTEN PERMISSION

DIMENSION UNITS	SCALE
mm	NTS

GENERAL TOLERANCES (UNLESS SPECIFIED)

ANGULAR TOL	±	3.0 °
4 PLACES	±	0.2
3 PLACES	±	0.2
2 PLACES	±	0.2
1 PLACE	±	0.2
0 PLACES	±	0.2

DRAFT WHERE APPLICABLE MUST REMAIN WITHIN DIMENSIONS

CURRENT REV DESC: REMOVED OBSOLETED PART NUMBERS AS PER PCN#516659

EC NO: 844075
DRWN: SAMPRS 2025/12/31
CHK'D: GGA 2026/02/10
APPR: GGA 2026/02/10

INITIAL REVISION:
DRWN: TENAGASE 2019/05/31
APPR: KOMURAKAMI 2020/01/16

molex

MICRO-LOCK PLUS 1.25 W/B
DUAL ROW VERTICAL SMT PLUG ASSEMBLY
FOR POTTING

PRODUCT CUSTOMER DRAWING

DOCUMENT NUMBER	DOC TYPE	DOC PART	REVISION
2077600000-SD	PSD	000	C1

THIRD ANGLE PROJECTION	DRAWING	SERIES	MATERIAL NUMBER	CUSTOMER	SHEET NUMBER
	A3-SIZE	207760	SEE SHEET 5	GENERAL	4 OF 5

FORMAT: master-tb-prod-A3
REVISION: J1
DATE: 2021/05/01

△2 適合製品及び各種仕様書 APPLICABLE PRODUCTS AND VARIOUS SPECIFICATIONS

梱包仕様書 PACKAGING SPECIFICATION	2077609200-SPK PS 200

適合嵌合相手 MATE WITH	シリーズ番号 SERIES NUMBER	204523	214527
	リテーナー対応 RETAINER APPLICABLE	NOT COMPLIANT	COMPLIANT (NATURAL, BLACK)
適合リテーナーシリーズ番号 APPLICABLE RETAINER SERIES NUMBER		-	214528
製品仕様書 PRODUCT SPECIFICATION		2045230001-PS PS 000	2145270001-PS PS 000
コネクタ取扱説明書 APPLICATION SPECIFICATION		5054320000-AS PS 000	

△5 207760**** 発注番号一覧 ORDER NUMBER LIST

NOT COMPLIANT		COMPLIANT		LOW HALOGEN	
BLUE	RED	BLACK	NATURAL (WHITE)	HOUSING COLOR	
---	---	2077601481	2077601480	14	WITH
---	---	2077601281	2077601280	12	
---	---	2077601081	2077601080	10	
---	---	2077600881	2077600880	8	
2077600684	2077600682	2077600681	2077600680	6	
2077600484	2077600482	2077600481	2077600480	4	
---	---	2077601471	2077601470	14	WITHOUT
---	---	2077601271	2077601270	12	
---	---	2077601071	2077601070	10	
---	---	2077600871	2077600870	8	
2077600674	2077600672	2077600671	2077600670	6	
2077600474	2077600472	2077600471	2077600470	4	
発注番号 ORDER NUMBER				極数 CIRCUIT SIZE	カバーテープ COVER TAPE
梱包形態 PACKAGING STYLE エンボステープ、リール EMBOSSED TAPE AND REEL					

THIS DRAWING CONTAINS INFORMATION THAT IS PROPRIETARY TO MOLEX ELECTRONIC TECHNOLOGIES, LLC AND SHOULD NOT BE USED WITHOUT WRITTEN PERMISSION

DIMENSION UNITS	SCALE
mm	NTS

GENERAL TOLERANCES (UNLESS SPECIFIED)		
ANGULAR TOL	±	3.0 °
4 PLACES	±	0.2
3 PLACES	±	0.2
2 PLACES	±	0.2
1 PLACE	±	0.2
0 PLACES	±	0.2

DRAFT WHERE APPLICABLE MUST REMAIN WITHIN DIMENSIONS

CURRENT REV DESC: REMOVED OBSOLETED PART NUMBERS AS PER PCN#516659

EC NO: 844075
DRWN: SAMPRS 2025/12/31
CHK'D: GGA 2026/02/10
APPR: GGA 2026/02/10

INITIAL REVISION:
DRWN: TENAGASE 2019/05/31
APPR: KOMURAKAMI 2020/01/16

molex

MICRO-LOCK PLUS 1.25 W/B
DUAL ROW VERTICAL SMT PLUG ASSEMBLY
FOR POTTING

PRODUCT CUSTOMER DRAWING

DOCUMENT NUMBER	DOC TYPE	DOC PART	REVISION
2077600000-SD	PSD	000	C1

THIRD ANGLE PROJECTION	DRAWING	SERIES	MATERIAL NUMBER	CUSTOMER	SHEET NUMBER
	A3-SIZE	207760	SEE CHART	GENERAL	5 OF 5

DOCUMENT STATUS	P1	RELEASE DATE	2026/02/10 10:00:19

FORMAT: master-tb-prod-A3
REVISION: J1
DATE: 2021/05/01