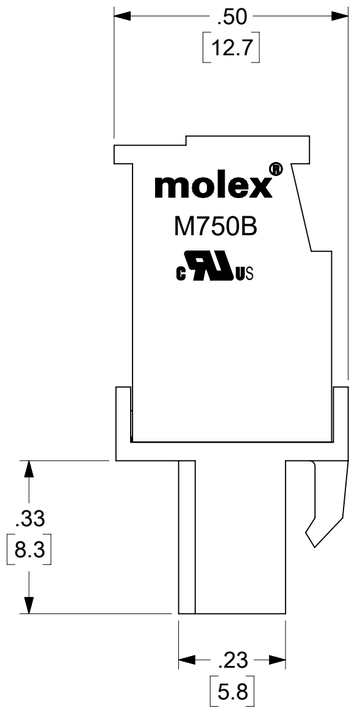

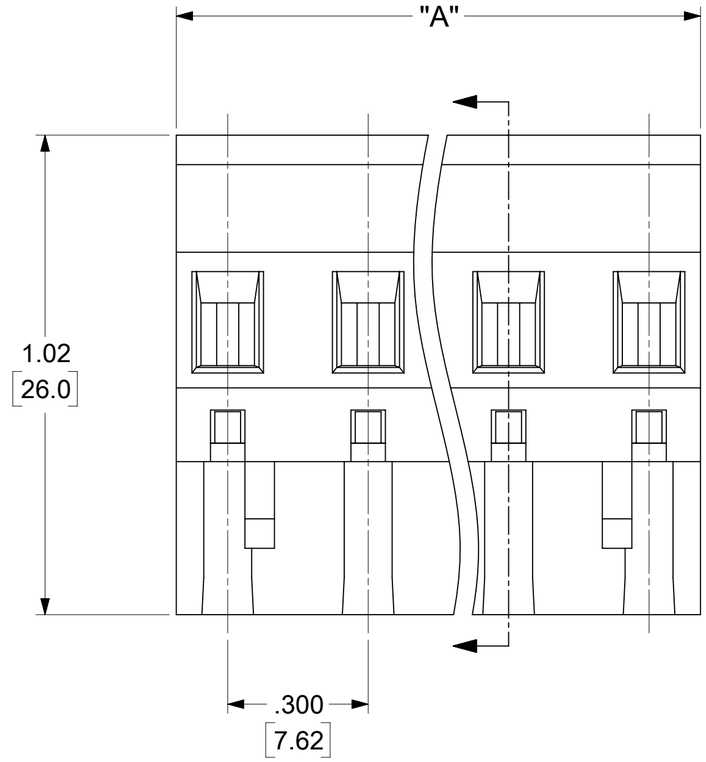

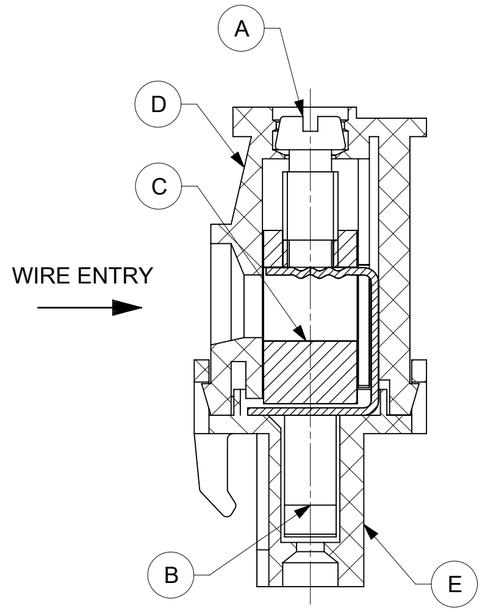

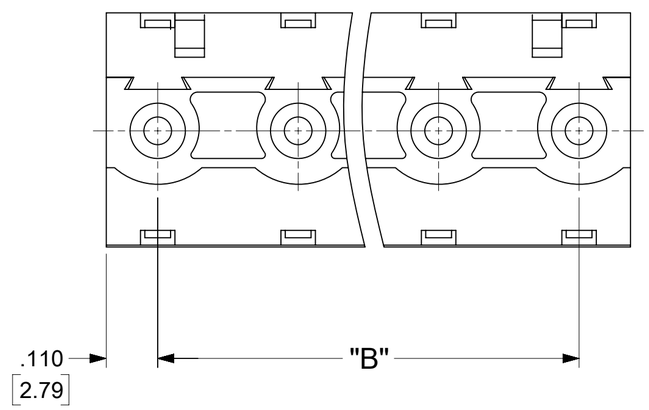

SPECIFICATIONS

1. MATERIAL:
   - A. SCREW: STEEL, M3, ZINC PLATED
   - B. CONTACT : BRONZE, TIN PLATED
   - C. CAGE: BRASS, NICKEL PLATED
   - D. BODY : PA66, UL94 V-0
   - E. COVER: PA66, UL94 V-0
2. WIRE SIZE: 30-12AWG
3. ELECTRICAL RATING: 18A, 300V MAX. PER UL
4. POWER-FREQUENCY WITHSTAND: AC 2500V/1MIN.
5. INSULATION RESISTANCE: DC500V 500MΩ OR ABOVE
6. RATED IMPULSE VOLTAGE: 4000V/MINUS AND PLUS 5 TIMES EACH
7. WIRE STRIP LENGTH: .28 IN. (7.0mm)
8. SCREW TORQUE: 5.0 IN LBS. (0.56 N.M)
9. OPERATING TEMPERATURE: -40°C TO +105°C
10. DIMS SHOWN ARE FOR REFERENCE ONLY

TOLERANCES			
MM	TOL	INCH	TOL
0-6	±0.25	0-.24	±.010
>6-30	±0.40	.24-1.18	±.016
>30-120	±0.50	1.18-4.76	±.020
>120	±0.80	>4.76	±.031

FUNCTIONAL SYMBOLS
FA = 0
FC = 0
FP = 0
DIVISIONAL SYMBOLS

THIS DRAWING CONTAINS INFORMATION THAT IS PROPRIETARY TO MOLEX ELECTRONIC TECHNOLOGIES, LLC AND SHOULD NOT BE USED WITHOUT WRITTEN PERMISSION

DIMENSION UNITS	SCALE
INCH/MM	4:1

GENERAL TOLERANCES (UNLESS SPECIFIED)

	MM	INCH
4 PLACES	± ---	± ---
3 PLACES	± ---	± SEE CHART
2 PLACES	± SEE CHART	± SEE CHART
1 PLACE	± SEE CHART	± ---
0 PLACES	± ---	± ---
ANGULAR TOL	± ---	

DRAFT WHERE APPLICABLE MUST REMAIN WITHIN DIMENSIONS

CURRENT REV DESC: ADDED PN 397060108, IMPRINTING DETAILS IN SHEET-2

EC NO: 819770
DRWN: ABENJAMINLW 2025/04/21
CHK'D: DACHAMMER 2025/04/21
APPR: JFMURPHY 2025/04/22

INITIAL REVISION:
DRWN: RSTONE 2014/02/27
APPR: JFMURPHY 2014/10/16

THIRD ANGLE PROJECTION | DRAWING: C-SIZE | SERIES: 39706

molex

PLUGABBLE TERMINAL BLOCK
7.62MM (.300) PITCH VERTICAL, FRONT FACING

PRODUCT CUSTOMER DRAWING

DOCUMENT NUMBER	DOC TYPE	DOC PART	REVISION
SD-39706-001	PSD	001	A4

MATERIAL NUMBER	CUSTOMER	SHEET NUMBER
SEE SHEET-2	GENERAL MARKET	1 OF 2

DOCUMENT STATUS	P1	RELEASE DATE	2025/04/22 16:11:32

FORMAT: Eng-lega-master-tb-prod-C
REVISION: E
DATE: 2020/01/14

CIRCUIT SIZE	PART NUMBER DATA				DIMENSIONAL INFORMATION			
	BLACK COLOR		GREEN COLOR		DIM. "A"		DIM. "B"	
	PART NUMBER	ENGINEERING NUMBER	PART NUMBER	ENGINEERING NUMBER	IN	mm	IN	mm
2	397065002	M750B-05-5-02-1	397060002	M750B-05-5-02-3	.52	13.2	.300	7.62
3	397065003	M750B-05-5-03-1	397060003	M750B-05-5-03-3	.82	20.8	.600	15.24
4	397065004	M750B-05-5-04-1	397060004	M750B-05-5-04-3	1.12	28.4	.900	22.86
5	397065005	M750B-05-5-05-1	397060005	M750B-05-5-05-3	1.42	36.1	1.200	30.48
6	397065006	M750B-05-5-06-1	397060006	M750B-05-5-06-3	1.72	43.7	1.500	38.10
7	397065007	M750B-05-5-07-1	397060007	M750B-05-5-07-3	2.02	51.3	1.800	45.72
8	397065008	M750B-05-5-08-1	397060008	M750B-05-5-08-3	2.32	58.9	2.100	53.34
8	---	---	397060108	M750B-05-5-08-3-A	2.32	58.9	2.100	53.34
9	397065009	M750B-05-5-09-1	397060009	M750B-05-5-09-3	2.62	66.5	2.400	60.96
10	397065010	M750B-05-5-10-1	397060010	M750B-05-5-10-3	2.92	74.2	2.700	68.58
11	397065011	M750B-05-5-11-1	397060011	M750B-05-5-11-3	3.22	81.8	3.000	76.20
12	397065012	M750B-05-5-12-1	397060012	M750B-05-5-12-3	3.52	89.4	3.300	83.82

A4

REF. LAST 2 DIGITS OF PART NUMBER EQUALS CIRCUIT COUNT

ENGINEERING NUMBER LEGEND

M750B - 05 - 5 - XX - X - X

- SERIES
- STYLE
- PITCH
- POLES
- COLOR
  - 1 = BLACK
  - 3 = GREEN
- IMPRINTING
  - A = 1, 2, 3, ...
  - B = 3, 2, 1, ...

A4

PART NUMBER 397060108

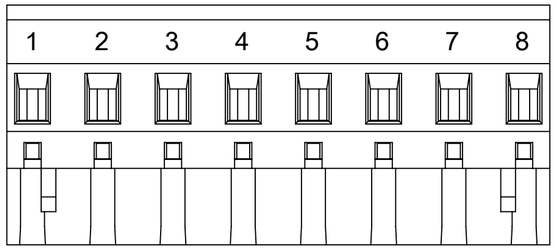

IMPRINTED CHARACTERS ARE WHITE

FUNCTIONAL SYMBOLS
EA = 0
EC = 0
EP = 0

DIVISIONAL SYMBOLS

THIS DRAWING CONTAINS INFORMATION THAT IS PROPRIETARY TO MOLEX ELECTRONIC TECHNOLOGIES, LLC AND SHOULD NOT BE USED WITHOUT WRITTEN PERMISSION

DIMENSION UNITS: INCH/MM
SCALE: 1:1

GENERAL TOLERANCES (UNLESS SPECIFIED)

	MM	INCH
4 PLACES	± ---	± ---
3 PLACES	± ---	± SEE CHART
2 PLACES	± SEE CHART	± SEE CHART
1 PLACE	± SEE CHART	± ---
0 PLACES	± ---	± ---
ANGULAR TOL	± ---	

DRAFT WHERE APPLICABLE MUST REMAIN WITHIN DIMENSIONS

CURRENT REV DESC: ADDED PN 397060108, IMPRINTING DETAILS IN SHEET-2

EC NO: 819770
DRWN: ABENJAMINLW 2025/04/21
CHK'D: DACHAMMER 2025/04/21
APPR: JFMURPHY 2025/04/22

INITIAL REVISION:
DRWN: RSTONE 2014/02/27
APPR: JFMURPHY 2014/10/16

THIRD ANGLE PROJECTION

DRAWING: C-SIZE
SERIES: 39706

molex

PLUGABBLE TERMINAL BLOCK
7.62MM (.300) PITCH VERTICAL, FRONT FACING

PRODUCT CUSTOMER DRAWING

DOCUMENT NUMBER	DOC TYPE	DOC PART	REVISION
SD-39706-001	PSD	001	A4

MATERIAL NUMBER	CUSTOMER	SHEET NUMBER
SEE CHART	GENERAL MARKET	2 OF 2

DOCUMENT STATUS	P1	RELEASE DATE	2025/04/22 16:11:32

FORMAT: Eng-lega-master-tb-prod-C
REVISION: B
DATE: 2020/01/14